SPU3 (A718)

PARTS CATALOG

INTRODUCTION

This chapter instructs you the numbers and names of parts on this machine.

1.EXTERIOR (A718) 2
2.LENS UNIT (A718) 4
3.ELECTRICAL SECTION (A718)..... 6
4.MIRROR UNIT (A718)..... 8
5.ACCESSORIES (A718)..... 10
Parts Index 13

1. EXTERIOR (A718)

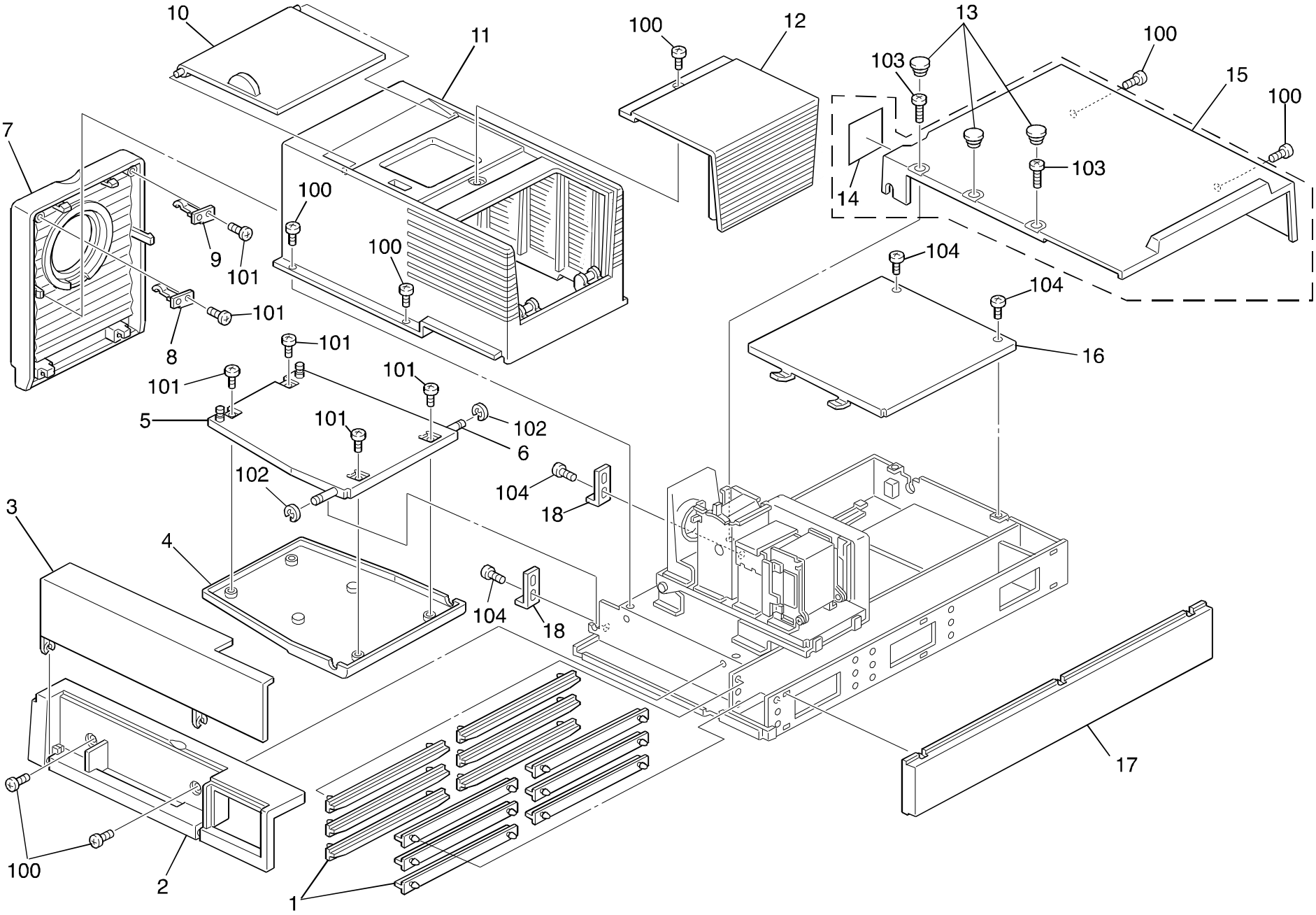

1. EXTERIOR (A718)

Index No.	Part No.	Description	Q ty Per Assembly
1	A998 4140	Guide Rail	12
2	A718 4080	Front Cover	1
3	A718 4020	Front Door	1
4	A718 4060	Joint Cover	1
5	A998 4070	Mirror Position Plate	1
6	A998 4150	Joint Shaft	1
7	A718 3010	Left Cover	1
8	A998 3020	Lens Cover Holder - Front	1
9	A998 3030	Lens Cover Holder - Rear	1
10	A718 3380	Top Cover	1
11	A718 5337	Lens Unit Cover	1
12	A718 3390	Lamp Cover	1
13	A998 4100	Rear Cover Cap	3
14	A718 9041	Decal - Main Switch	1
15	A718 5410	Rear Cover	1
16	A998 4130	Shield Plate	1
17	A718 4030	Right Cover	1
18	A998 4160	Joint Shaft Holder	2

Index No.	Part No.	Description	Q ty Per Assembly
100	0354 0060W	Philips Trus Head Screw - M4x6	
101	0354 0080B	Screw - M4X8	
102	0720 0040E	Retaining Ring - M4	
103	0354 0100W	Philips Pan Head Screw - M4x10	
104	0353 0040W	Philips Pan Head Bind Screw - M3x4	

2. LENS UNIT (A718)

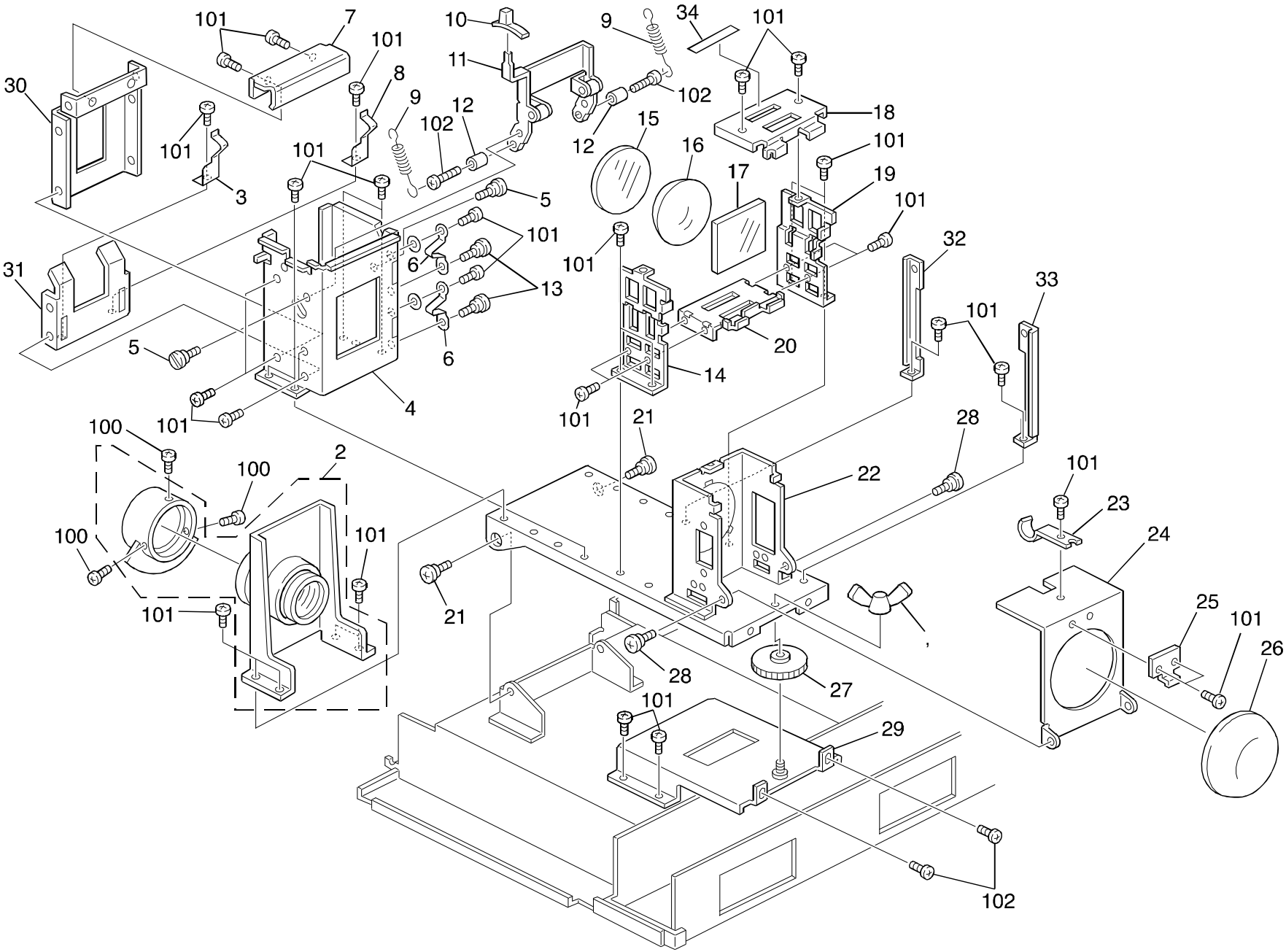

2. LENS UNIT (A718)

Index No.	Part No.	Description	Q ty Per Assembly
1	A718 3500	Nut Holder	1
2	A718 1250	Projection Lens	1
3	A998 3170	Front Position Spring	1
4	A998 5306	Slide Holder Guide	1
5	A998 6050	Stepped Screw - Lever	2
6	A998 3100	Rear Spring Plate	2
7	A998 3070	Filter Guide	1
8	A998 3090	Front Spring Plate	1
9	A998 3140	Pressure Spring	2
10	A718 3130	Position Lever Knob	1
11	A998 3110	Holder Lever	1
12	A998 3120	Spacer	2
13	A998 6040	Stepped Screw - Spring	2
14	A998 3180	Front Condenser Lens Plate	2
15	A998 0070	1st Condenser Lens	1
16	A998 0080	2nd Condenser Lens	1
17	A998 0650	Heate Filter	1
18	A998 3200	Upper Condencer Lens Plate	1
19	A998 3190	Rear Condenser Lens Plate	1
20	A998 3210	Lower Condencer Lens Plate	1
21	A998 6030	Stepped Screw	2
22	A998 1222	Non-spherical Lens Ass y	1
23	A998 3290	Reflector Lock Spring	1
24	A998 3270	Reflector Cover	1
25	A998 3280	Reflector Holder	1
26	A998 0840	Reflector	1
27	A998 3360	Adjusting Nut	1
28	A998 6010	Stepped Screw	2
29	A718 3350	Adjusting Nut Bracket	1
30	A998 3080	Upper Left Guide	1
31	A998 3150	Lower Left Guide	1
32	A998 3311	Left Bracket	1
33	A998 3320	Right Bracket	1
34	A998 9111	Caution Decal	1

Index No.	Part No.	Description	Q ty Per Assembly
100	0413 0064W	Tapping Screw - M3x6	
101	0353 0040W	Philips Pan Head Bind Screw - M3x4	
102	0353 0080W	Philips Pan Head Bind Screw - M3x8	

3. ELECTRICAL SECTION (A718)

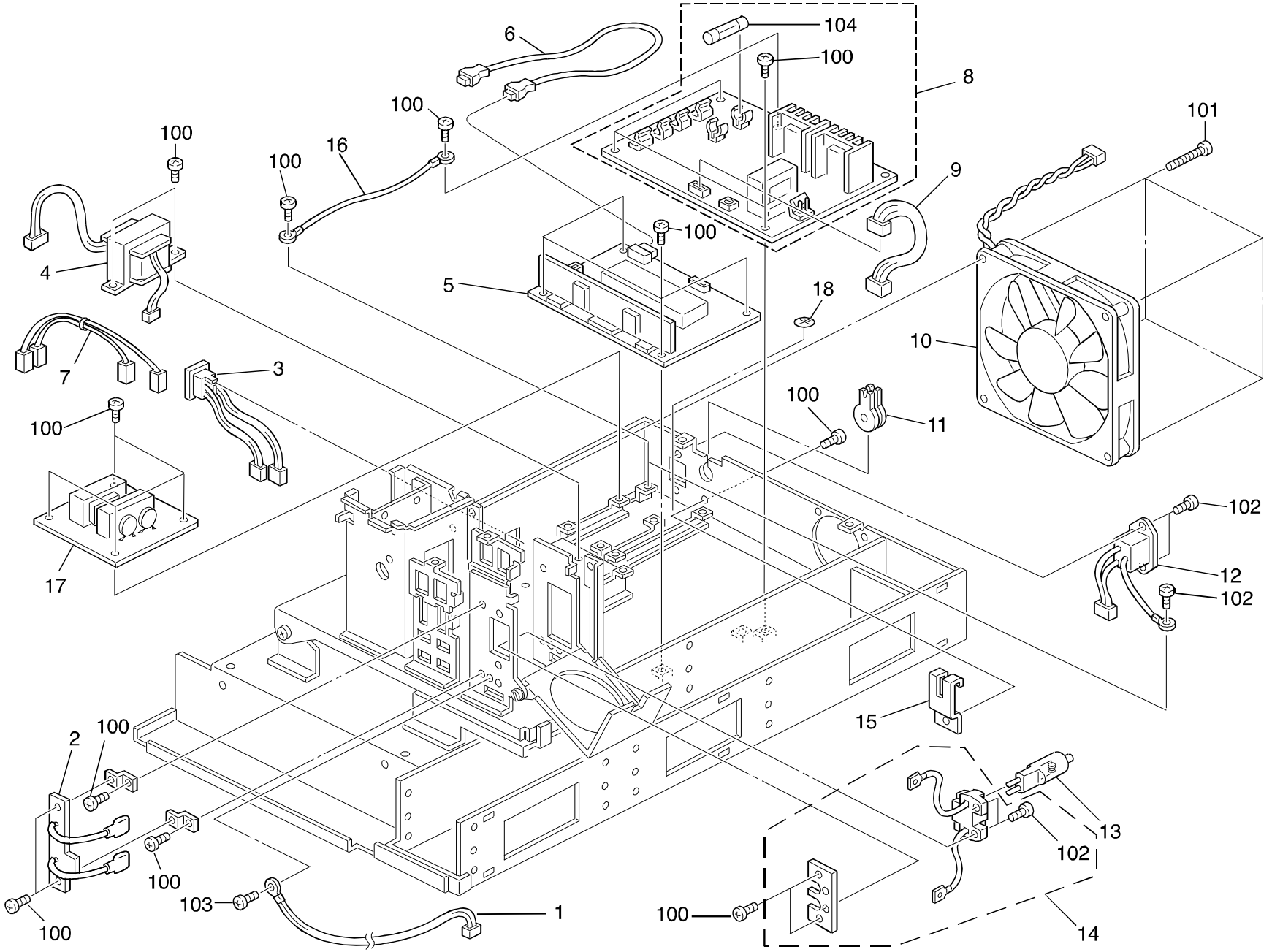

3. ELECTRICAL SECTION (A718)

Index No.	Part No.	Description	Q ty Per Assembly
1	A998 8071	Lamp Thermistor	1
2	A998 5803	Lamp Thermofuse	1
3	A998 5805	Main Switch	1
4	A998 8061	Transformer - 115V	1
4	A998 8062	Transformer - 230V	1
5	A718 5802	DC Control Board	1
6	AW03 0029	Fiber Cable - 800	1
7	A998 5814	Noise Filter Harness - 230V	1
8	A718 8011	Projection Lamp Regulator - 115V	1
8	A718 8012	Projection Lamp Regulator - 230V	1
9	A998 5812	DC Harness	1
10	A998 5804	Lamp Cooling Fan	1
11	A998 4220	Bushing	1
12	A998 8081	Power Supply Connector - 115V	1
12	A998 8082	Power Supply Connector - 230V	1
13	A718 8100	Projection Lamp	1
14	A998 1221	Projector Lamp Holder	1
15	A998 3470	Bushing Cover	1
16	A998 8131	Grounding Harness	1
17	A718 5809	Noise Filter Board (230V)	1
18	AA00 1190	Decal - Ground	1

Index No.	Part No.	Description	Q ty Per Assembly
100	0353 0040W	Philips Pan Head Bind Screw - M3x4	
101	0354 0300W	Philips Pan Head Screw - M34x30	
102	0353 0080W	Philips Pan Head Bind Screw - M3x8	
103	0354 0060W	Philips Truss Head Screw - M4x6	
104	1107 0389	Fuse - 2.5A	
104	1107 0746	Fuse - 1.25A 250V	

4. MIRROR UNIT (A718)

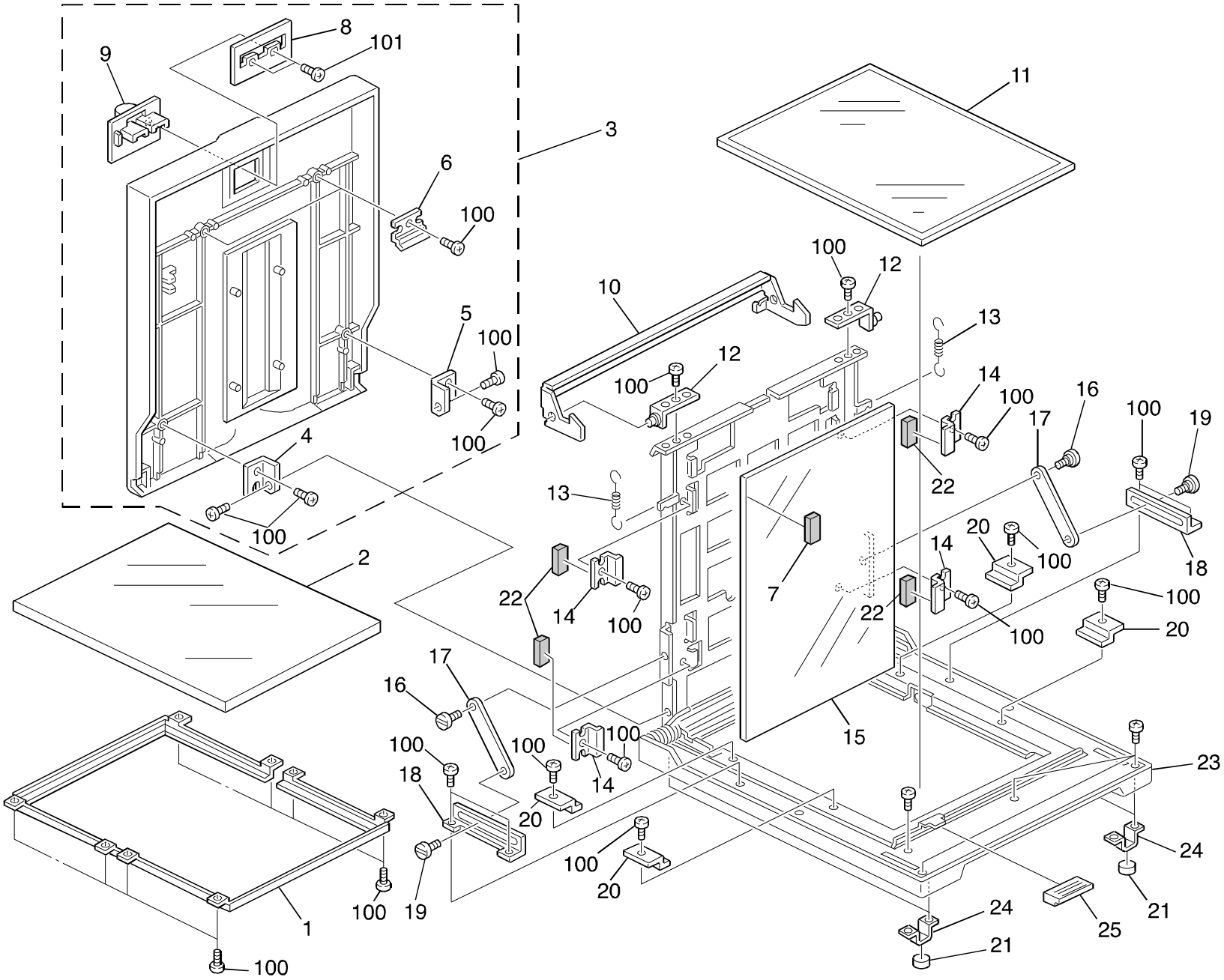

4. MIRROR UNIT (A718)

Index No.	Part No.	Description	Q ty Per Assembly
1	A998 2140	Lens Guard Holder	1
2	A718 0550	Fresnel Lens Guard	1
3	A718 5202	Upper Mirror Cover	1
4	A998 2050	Mirror Cover Bracket - Front	1
5	A998 2060	Mirror Cover Bracket - Rear	1
6	A998 2040	Mirror Cover Bracket - Upper	2
7	A718 2500	Fresnel Lens Cushion	1
8	A998 2280	Lever Bracket	1
9	A718 2270	Mirror Lock Lever	1
10	A998 2290	Mirror Lock Lever	1
11	A998 0820	Fresnel Lens	1
12	A998 2400	Lever Holder	2
13	A998 3140	Pressure Spring	2
14	A998 2080	Mirror Holder	4
15	A998 0410	Mirror	1
16	A998 6020	Arm Guide Screw	2
17	A998 2230	Guide Arm	2
18	A998 2240	Arm Guide Rail	2
19	A998 6060	Arm Guide Pin	2
20	A998 2130	Fresnel Lens Holder	4
21	A998 9001	Rubber Foot 4pc Set	1
22	A998 2410	Mirror Holder Cusition	4
23	A718 2010	Lower Cover	1
24	A998 2200	Rubber Foot Bracket	4
25	A718 2120	Fresnel Lens Grip	1

Index No.	Part No.	Description	Q ty Per Assembly
100	0353 0040W	Philips Pan Head Bind Screw - M3x4	
101	0413 0082Z	Tapping Screw - M3x8	

5. ACCESSORIES (A718)

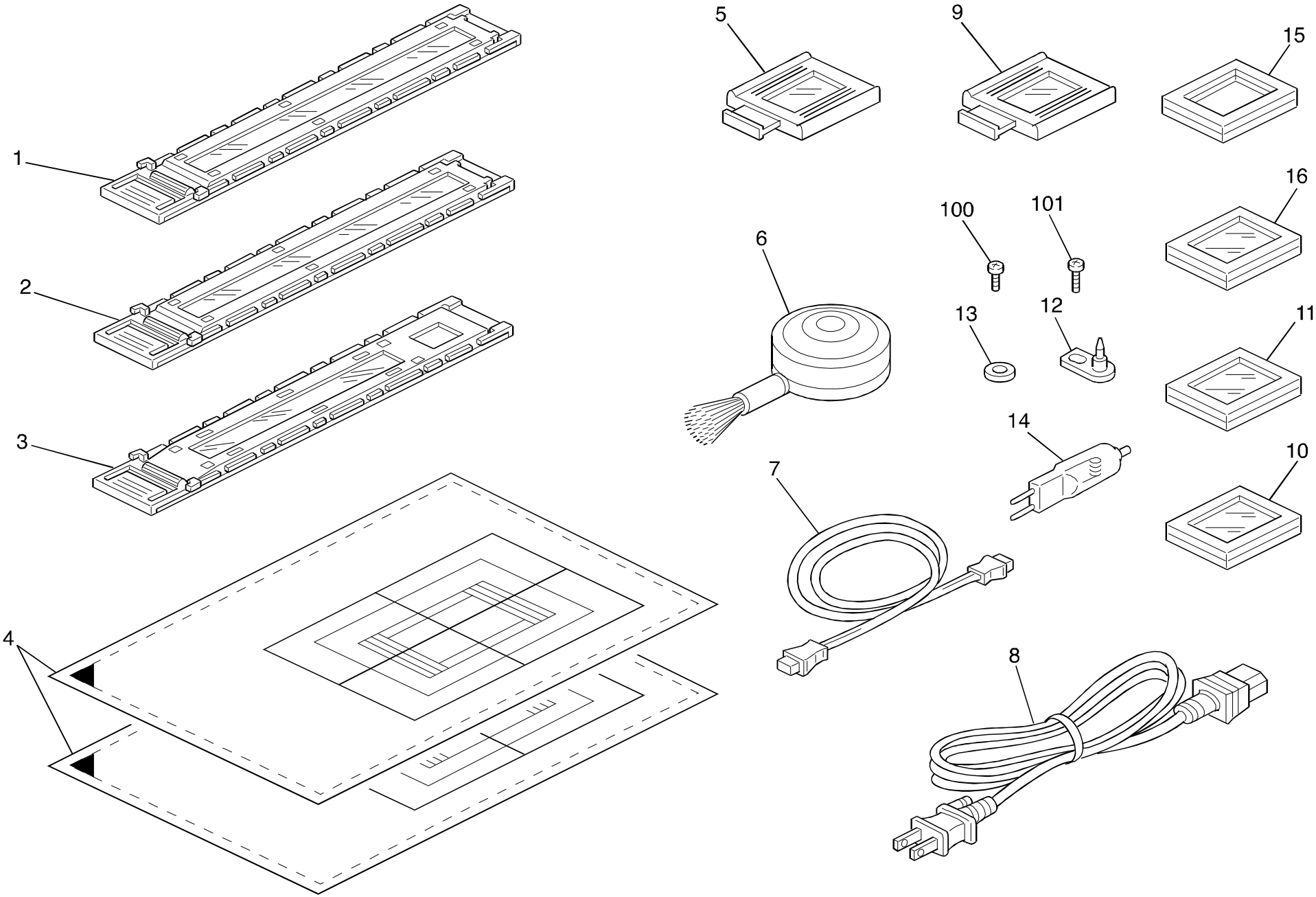

5. ACCESSORIES (A718)

Index No.	Part No.	Description	Q ty Per Assembly
1	A718 5503	Film Slide Holder - Strip Film	1
2	A718 5502	Film Slide Holder - Mount Film	1
3	A718 5501	Film Slide Holder - Glass Mountfilm	1
4	A718 6970	Film Position Sheet	2
5	A718 5507	Correction Filter - Negative	1
6	A998 6930	Blower Brush	1
7	AW03 0029	Fiber Cable - 800	1
8	A998 8091	Power Cord - 115V	1
8	A998 8092	Power Cord - 230V	1
9	A718 5506	Correction Filter - Positive	1
10	A998 6980	Base Film - Agfa	1
11	A718 6950	Base Film - Fuji Sg100	1
12	A998 5418	Positioning Pin	2
13	A998 4200	Spacer	4
14	A718 8100	Projection Lamp	1
15	A998 6920	Film Strip Holder	1
16	A718 6940	Base Film - Kodack	1

Index No.	Part No.	Description	Q ty Per Assembly
100	0354 0080B	Screw - M4X8	
101	0354 0120B	Screw - M4X12	

PARTS INDEX

Part No.	Description	Page and Index No.
A718 0550	Fresnel Lens Guard	9- 2
A718 1250	Projection Lens	5- 2
A718 2010	Lower Cover	9- 23
A718 2120	Fresnel Lens Grip	9- 25
A718 2270	Mirror Lock Lever	9- 9
A718 2500	Fresnel Lens Cushion	9- 7
A718 3010	Left Cover	3- 7
A718 3130	Position Lever Knob	5- 10
A718 3350	Adjusting Nut Bracket	5- 29
A718 3380	Top Cover	3- 10
A718 3390	Lamp Cover	3- 12
A718 3500	Nut Holder	5- 1
A718 4020	Front Door	3- 3
A718 4030	Right Cover	3- 17
A718 4060	Joint Cover	3- 4
A718 4080	Front Cover	3- 2
A718 5202	Upper Mirror Cover	9- 3
A718 5337	Lens Unit Cover	3- 11
A718 5410	Rear Cover	3- 15
A718 5501	Film Slide Holder - Glass Mountfilm	11- 3
A718 5502	Film Slide Holder - Mount Film	11- 2
A718 5503	Film Slide Holder - Strip Film	11- 1
A718 5506	Correction Filter - Positive	11- 9
A718 5507	Correction Filter - Negative	11- 5
A718 5802	DC Control Board	7- 5
A718 5809	Noise Filter Board (230V)	7- 17
A718 6940	Base Film - Kodack	11- 16
A718 6950	Base Film - Fuji Sg100	11- 11
A718 6970	Film Position Sheet	11- 4
A718 8011	Projection Lamp Regulator - 115V	7- 8
A718 8012	Projection Lamp Regulator - 230V	7- 8
A718 8100	Projection Lamp	7- 13
A718 8100	Projection Lamp	11- 14
A718 9041	Decal - Main Switch	3- 14

Part No.	Description	Page and Index No
AA00 1190	Decal - Ground	7- 18
AW03 0029	Fiber Cable - 800	7- 6
AW03 0029	Fiber Cable - 800	11- 7

Part No.	Description	Page and Index No.
A998 0070	1st Condenser Lens	5- 15
A998 0080	2nd Condenser Lens	5- 16
A998 0410	Mirror	9- 15
A998 0650	Heate Filter	5- 17
A998 0820	Fresnel Lens	9- 11
A998 0840	Reflector	5- 26
A998 1221	Projector Lamp Holder	7- 14
A998 1222	Non-spherical Lens Ass y	5- 22
A998 2040	Mirror Cover Bracket - Upper	9- 6
A998 2050	Mirror Cover Bracket - Front	9- 4
A998 2060	Mirror Cover Bracket - Rear	9- 5
A998 2080	Mirror Holder	9- 14
A998 2130	Fresnel Lens Holder	9- 20
A998 2140	Lens Guard Holder	9- 1
A998 2200	Rubber Foot Bracket	9- 24
A998 2230	Guide Arm	9- 17
A998 2240	Arm Guide Rail	9- 18
A998 2280	Lever Bracket	9- 8
A998 2290	Mirror Lock Lever	9- 10
A998 2400	Lever Holder	9- 12
A998 2410	Mirror Holder Cusition	9- 22
A998 3020	Lens Cover Holder - Front	3- 8
A998 3030	Lens Cover Holder - Rear	3- 9
A998 3070	Filter Guide	5- 7
A998 3080	Upper Left Guide	5- 30
A998 3090	Front Spring Plate	5- 8
A998 3100	Rear Spring Plate	5- 6
A998 3110	Holder Lever	5- 11
A998 3120	Spacer	5- 12
A998 3140	Pressure Spring	5- 9
A998 3140	Pressure Spring	9- 13
A998 3150	Lower Left Guide	5- 31
A998 3170	Front Position Spring	5- 3
A998 3180	Front Condenser Lens Plate	5- 14
A998 3190	Rear Condenser Lens Plate	5- 19

Part No.	Description	Page and Index No
A998 3200	Upper Condencer Lens Plate	5- 18
A998 3210	Lower Condencer Lens Plate	5- 20
A998 3270	Reflector Cover	5- 24
A998 3280	Reflector Holder	5- 25
A998 3290	Reflector Lock Spring	5- 23
A998 3311	Left Bracket	5- 32
A998 3320	Right Bracket	5- 33
A998 3360	Adjusting Nut	5- 27
A998 3470	Bushing Cover	7- 15
A998 4070	Mirror Position Plate	3- 5
A998 4100	Rear Cover Cap	3- 13
A998 4130	Shield Plate	3- 16
A998 4140	Guide Rail	3- 1
A998 4150	Joint Shaft	3- 6
A998 4160	Joint Shaft Holder	3- 18
A998 4200	Spacer	11- 13
A998 4220	Bushing	7- 11
A998 5306	Slide Holder Guide	5- 4
A998 5418	Positioning Pin	11- 12
A998 5803	Lamp Thermofuse	7- 2
A998 5804	Lamp Cooling Fan	7- 10
A998 5805	Main Switch	7- 3
A998 5812	DC Harness	7- 9
A998 5814	Noise Filter Harness - 230V	7- 7
A998 6010	Stepped Screw	5- 28
A998 6020	Arm Guide Screw	9- 16
A998 6030	Stepped Screw	5- 21
A998 6040	Stepped Screw - Spring	5- 13
A998 6050	Stepped Screw - Lever	5- 5
A998 6060	Arm Guide Pin	9- 19
A998 6920	Film Strip Holder	11- 15
A998 6930	Blower Brush	11- 6
A998 6980	Base Film - Agfa	11- 10
A998 8061	Transformer - 115V	7- 4
A998 8062	Transformer - 230V	7- 4

Part No.	Description	Page and Index No.
A998 8071	Lamp Thermistor	7- 1
A998 8081	Power Supply Connector - 115V	7- 12
A998 8082	Power Supply Connector - 230V	7- 12
A998 8091	Power Cord - 115V	11- 8
A998 8092	Power Cord - 230V	11- 8
A998 8131	Grounding Harness	7- 16
A998 9001	Rubber Foot 4pc Set	9- 21
A998 9111	Caution Decal	5- 34

Part No.	Description	Page and Index No
0353 0040W	Philips Pan Head Bind Screw - M3x4	3-104
0353 0040W	Philips Pan Head Bind Screw - M3x4	5-101
0353 0040W	Philips Pan Head Bind Screw - M3x4	7-100
0353 0040W	Philips Pan Head Bind Screw - M3x4	9-100
0353 0080W	Philips Pan Head Bind Screw - M3x8	5-102
0353 0080W	Philips Pan Head Bind Screw - M3x8	7-102
0354 0060W	Philips Trus Head Screw - M4x6	3-100
0354 0060W	Philips Truss Head Screw - M4x6	7-103
0354 0080B	Screw - M4X8	3-101
0354 0080B	Screw - M4X8	11-100
0354 0100W	Philips Pan Head Screw - M4x10	3-103
0354 0120B	Screw - M4X12	11-101
0354 0300W	Philips Pan Head Screw - M34x30	7-101
0413 0064W	Tapping Screw - M3x6	5-100
0413 0082Z	Tapping Screw - M3x8	9-101
0720 0040E	Retaining Ring - M4	3-102
1107 0389	Fuse - 2.5A	7-104
1107 0746	Fuse - 1.25A 250V	7-104