Sorter Adapter Type J (A527)

This parts catalog is includes MB No 1 to 2.

PARTS CATALOG

INTRODUCTION

This chapter instructs you the numbers and names of parts on this machine.

INDEX to PARTS CATALOG

1.SORTER Adapter Type J 2
PARTS INDEX 5

1. SORTER Adapter Type J

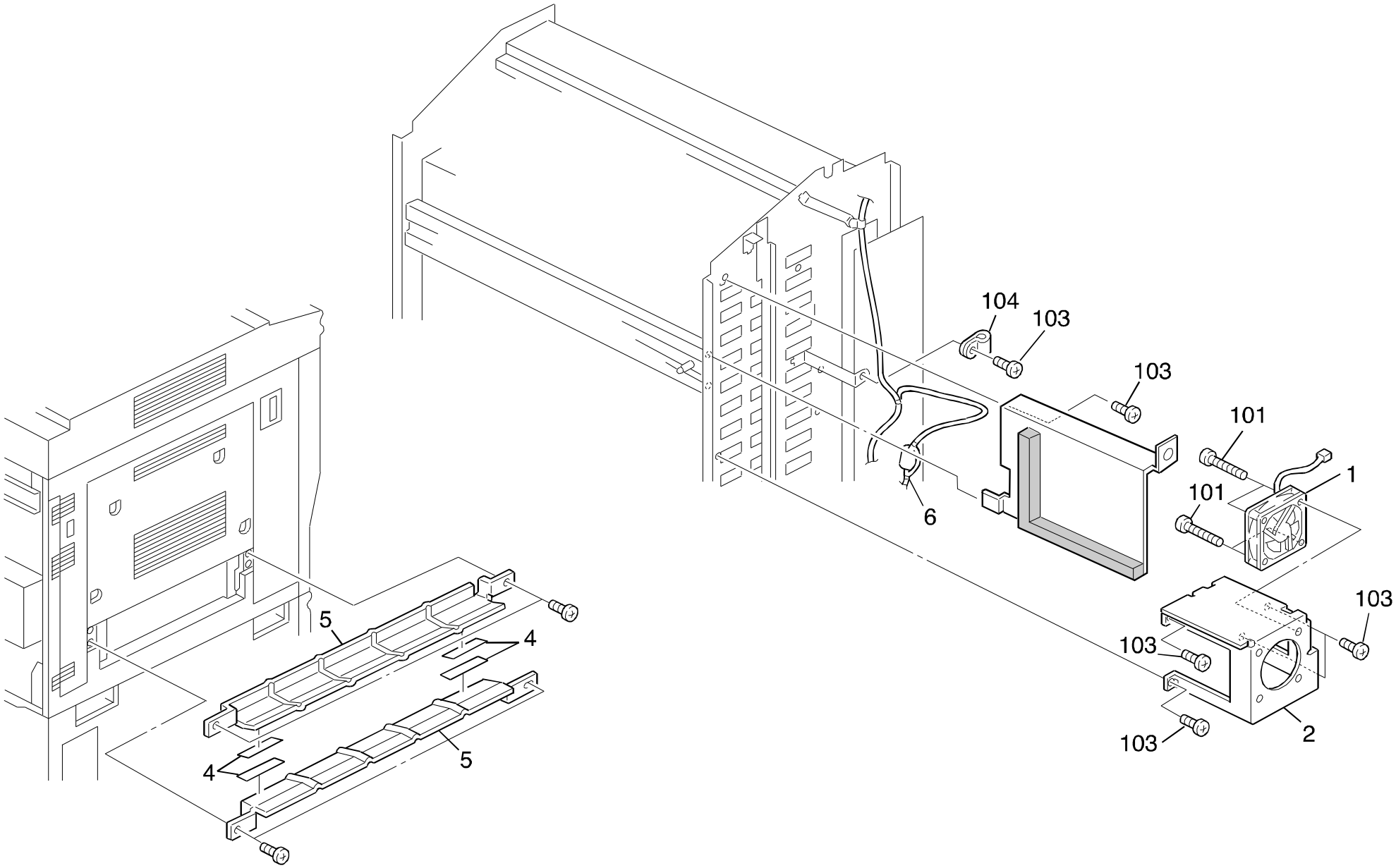

1. SORTER Adapter Type J

Index No.	Part No.	Description	Q ty Per Assembly
1	AX64 0043	Optics Cooling Fan Motor - DC24V 2.88W	1
2	A527 1041	Fan Motor Bracket	1
3	A527 1045	Air Outlet Plate	1
	A527 1042	x/o MB2	1
4	AA15 0324	Mylar - 60x5mm	4
5	A527 4401	Guide Plate	2
6	A527 5363	Sorter Harness	1

Index No.	Part No.	Description	Q ty Per Assembly
101	0341 0300	Philips Pan Head Screw - M4x30	
102	1105 0349	Edge Saddle MB2 (OBS)	
103	0314 0060B	Philips Pan Head Screw - M4x6	
104	1105 0199	Clamp	

PARTS INDEX

Part No.	Description	Page and Index No.
A527 1041	Fan Motor Bracket	3- 2
A527 1042	x/o MB2	3- 3
A527 1045	Air Outlet Plate	3- 3
A527 4401	Guide Plate	3- 5
A527 5363	Sorter Harness	3- 6

Part No.	Description	Page and Index No
AA15 0324	Mylar - 60x5mm	3- 4
AX64 0043	Optics Cooling Fan Motor - DC24V 2.88W	3- 1
0314 0060B	Philips Pan Head Screw - M4x6	3-103
0341 0300	Philips Pan Head Screw - M4x30	3-101
1105 0199	Clamp	3-104
1105 0349	Edge Saddle MB2 (OBS)	3-102