IMPORTANT SAFETY NOTICES

PREVENTION OF PHYSICAL INJURY

1. The wall outlet should be near the copier and easily accessible.
2. Note that some components of the copier and the paper tray unit are supplied with electrical voltage even if the main switch is turned off.
3. If any adjustment or operation check has to be made with exterior covers off or open while the main switch is turned on, keep hands away from electrified or mechanically driven components.
4. If the hot roller temperature is low when the main switch is turned on, the copier starts process control self check automatically. Keep hands away from the mechanical and the electrical components to avoid any injury.
5. If the start key is pressed before the copier completes the warm-up period (Start key starts blinking red and green alternatively), keep hands away from the mechanical and the electrical components as the copier starts making copies as soon as the warm-up period is completed.
6. The inside and the metal parts of the fusing unit become extremely hot while the copier is operating. Be careful to avoid touching those components with your bare hands.

HEALTH SAFETY CONDITIONS

1. Never operate the copier without the ozone filters installed.
2. Always replace the ozone filters with the specified ones at the specified intervals.
3. Toner and developer are non-toxic, but if you get either of them in your eyes by accident, it may cause temporary eye discomfort. Try to remove with eye drops or flush with water as first aid. If unsuccessful, get medical attention.

OBSERVANCE OF ELECTRICAL SAFETY STANDARDS

1. The copier and its peripherals must be installed and maintained by a customer service representative who has completed the training course on those models.
2. The RAM board on the main control board has a lithium battery which can explode if replaced incorrectly. Replace the battery only with an identical one. The manufacturer recommends replacing the entire RAM board. Do not recharge or burn this battery. Used batteries must be handled in accordance with local regulations.

© 1996 By Ricoh Company Ltd. All rights reserved

SAFETY AND ECOLOGICAL NOTES FOR DISPOSAL

1. Do not incinerate the toner bottle or the used toner. Toner dust may ignite suddenly when exposed to open flame.
2. Dispose of used toner, developer, and organic photoconductor according to local regulations. (These are non-toxic supplies.)
3. Dispose of replaced parts in accordance with local regulations.
4. When keeping used lithium batteries in order to dispose of them later, do not put more than 100 batteries per sealed box. Storing larger numbers or not sealing them apart may lead to chemical reactions and heat build-up.

LASER SAFETY

The Center for Devices and Radiological Health (CDRH) prohibits the repair of laser-based optical units in the field. The optical housing unit can only be repaired in a factory or at a location with the requisite equipment. The laser subsystem is replaceable in the field by a qualified Customer Engineer. The laser chassis is not repairable in the field. Customer engineers are therefore directed to return all chassis and laser subsystems to the factory or service depot when replacement of the optical subsystem is required.

⚠ DANGER

Use of controls, or adjustment, or performance of procedures other than those specified in this manual may result in hazardous radiation exposure.

⚠ WARNING FOR LASER UNIT

DANGER: Turn off the main switch before attempting any of the procedures in the Laser Unit section. Laser beams can seriously damage your eyes.

CAUTION MARKING:





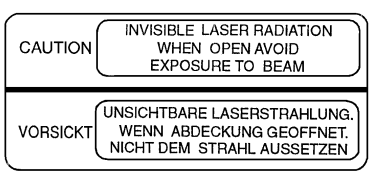

INTRODUCTION

The A172/A199 copier (product name: LILY) is based on **the A109 copier (DFC-ALPHA)**, the base copier.

This documentation gathers the A172/A199 differing points from the base copier that service personnel will need to maintain this copier. Therefore, this documentation should be treated as a insert version of the base copier's service manual, although it has a separate binder. It should always be utilized together with the base copier's service manual.

SECTION 1

OVERALL
MACHINE INFORMATION

1. MACHINE CONFIGURATION

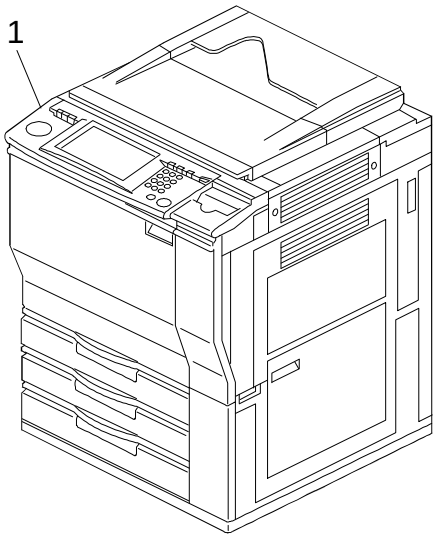

A172V500.wmf

- Copier -

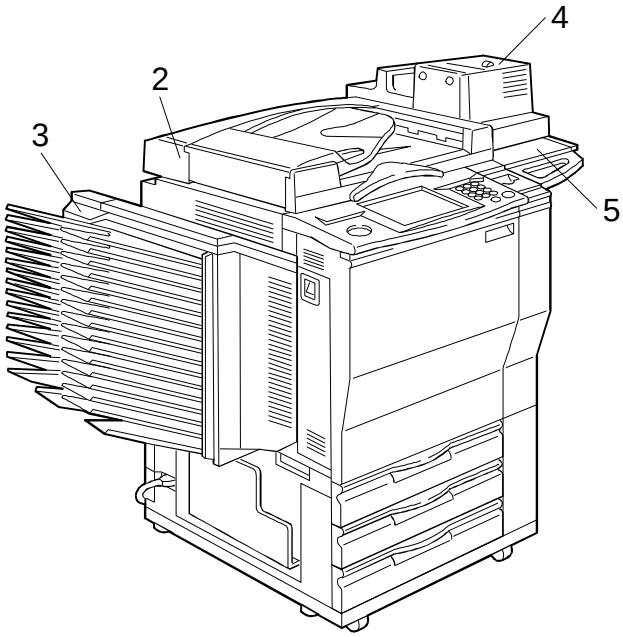

A172V501.wmf

- Full System -

Item	Machine Code	Note	No.
Copier	A172 A199	• A172 is the edit version with a full color operation panel. • A199 is the non-edit version with a black & white operation panel. • An English language ROM board is installed in -17/29/10/22/15 machines. • No language ROM board is installed in -27/26 machines.	1
Dual Job Feeder	A610	• Common with A175/A176/A177/A191/A192 copiers.	2
Sorter (15-bin)	A322	• A sorter adapter (A527) is required for installation.	3
Film Projector Unit	A718	• A holder (A702-18) is required for installation.	4
Holder	A702-18	• The holder can be installed independently as an original table.	5
Language ROM board (for operation panel)	A654	• The following languages are available: English (A4), German, French, Italian, Spanish, (Universal).	—

2. SPECIFICATIONS

2.1 SPECIFICATIONS

Specifications are subject to change without notice.

Configuration: Console

Copy Process: Dry electrostatic transfer system

Resolutions: 400 dpi

Gradations: 256 gradations

Original Type: Sheet/book, object

Original Size: Maximum: A3 (lengthwise), 11" x 17" (lengthwise)

Original Alignment: Rear-left corner

Copy Paper Weight:

- Paper Tray: 64 - 104.7 g/m^2 or 17 - 28 lb
- Bypass Feed Tray: 64 - 157 g/m^2 or 17 - 42 lb

NOTE: With paper heavier than 104.7 g/m^2 or 28 lb, use the bypass feed tray and select Thick Paper mode.

Available Copy Paper Size:

Tray	Paper Direction	A4/A3 version	LT/DLT version
1st /2nd Tray	Lengthwise	A3, A4, 8 1/2" x 13" (F4), 8 1/4" x 13"	11" x 17" (DLT), 11" x 15", 10" x 14", 8 1/2" x 14" (LG), 8" x 13" (F), 8 1/2" x 11" (LT), 8" x 10 1/2", 8" x 10"
	Sideways	A4, A5	11" x 8 1/2" (LT), 8 1/2" x 5 1/2" (HLT)
3rd Tray	Lengthwise	A3, B4, A4, B5, A5, 11" x 17" (DLT), 11" x 15", 10" x 14", 8 1/2" x 14" (LG), 8 1/2" x 13" (F4), 8 1/4" x 13", 8" x 13" (F), 8 1/2" x 11" (LT), 8" x 10 1/2", 8" x 10", 5 1/2" x 8 1/2" (HLT)	
	Sideways	A4, B5, A5, 11" x 8 1/2" (LT), 8 1/2" x 5 1/2" (HLT)	
Bypass Feed Tray	Lengthwise	A3, B4, A4, B5, A5, B6, A6	11" x 17" (DLT), 10" x 14", 8 1/2" x 11" (LT), 8" x 13" (F), 5 1/2 x 8 1/2" (HLT)
	Sideways	A4, B5, A5, B6, 8 1/2" x 11"	8 1/2" x 11" (LT), 5 1/2" x 8 1/2" (HLT)
	Non-standard paper size	Horizontal direction: 148 - 432 mm or 5.8" - 17.0" Vertical direction: 100 - 297 mm or 3.9" - 11.7"	

Warm-up Time:	About 8 minutes (at 20°C or 68°F)
First Copy Time: (A4 or 8 1/2" x 11" sideways)	• Full Color (4 scans): 15.5 seconds • Single Color: Black, Yellow, Magenta, Cyan: 8.8 seconds Red, Green, Blue, Orange, Light Green: 11.5 seconds. **NOTE:** 1) When selecting OHP/Thick Paper modes, copying speed is reduced. 2) After changing some modes, the first copy time will take longer than usual.
Copying Speed: (Standard modes)	• Full Color (4 scans): A4 or 8 1/2" x 11" sideways: 6 copies/minute A3 or 11" x 17": 3 copies/minute • Single Color (Black, Yellow, Magenta, Cyan): A4 or 8 1/2" x 11" sideways: 31 copies/minute A3 or 11" x 17": 15 copies/minute • Single Color (Red, Green, Blue, Orange, Light Green): A4 or 8 1/2" x 11" sideways: 10 copies/minute A3 or 11" x 17": 5 copies/minute **NOTE:** When selecting OHP/Thick Paper modes, copying speed is reduced.
Non-reproduction Area:	• Leading edge: 5 ± 2 mm or 0.2" ± 0.08" • Side: 2 ± 2 mm or 0.08" ± 0.08", Total less than 4 mm or 0.16" • Trailing edge: 2 ± 2 mm or 0.08" ± 0.08"
Copy Number Input:	Number keys, 1 to 99
Automatic Reset:	1-minute standard setting; can also be set to 10 to 900 seconds in 1-second steps, or to no auto reset.
Paper Feed:	Paper Tray x 3 (500 sheets of paper each) Bypass Feed Tray (50 sheets of paper with paper lighter than 104.7 g/m^2 or 28 lb)

Copy Tray Capacity: 100 sheets of paper

Toner Replenishment: Bottle type (340g/bottle)

Reproduction Ratio:
- A4/A3 version: 25%, 50%, 65%, 71%, 75%, 82%, 93%, 100%, (Full Size), 115%, 122%, 141%, 200%, 400% + User ratio x 2
- LT/DLT version: 25%, 50%, 65%, 74%, 77%, 85%, 93%, 100%, (Full Size), 121%, 129%, 155%, 200%, 400%, + User ratio x 2

Zoom: From 25% to 400% in 1% steps

Power Source: 115 V 60 Hz, more than 12 A (for NA)
220 ~ 240 V 50/60 Hz, more than 7 A (for EU and AA)

Power Consumption: (Copier only)
- Maximum: less than 1.5 kW
- Warm-up: 1.40 kW
- Stand-by: 0.93 k W
- Copy Cycle: 1.20 kW

Noise Emission

Sound pressure level (The measurements are made in accordance with ISO 7779 at the operator position.)

	Copier only
Stand-by	Less than 42 dB (A)
Copying	Less than 56 dB (A)

Sound power level (The measurements are made in accordance with ISO 7779.)

	Copier only
Stand-by	Less than 59 dB (A)
Copying	Less than 69 dB (A)

Dimensions (W x D x H):
- Copier Only:
  692 x 713 x 1026 mm or 27.3" x 28.1" x 40.4"
- Full System*:
  1499 x 713 x 1099 mm or 59.1" x 28.1" x 43.2"
  (*= Copier + Dual Job Feeder + Sorter + Holder)

Weight:	• Copier Only: 200 kg or 440.8 lb
Optional Equipment	• Dual Job Feeder • Sorter • Sorter Adapter • Projector Unit • Holder for Projector Unit • Key Counter • Interface Kit for Controller

2.2 FUNCTIONS: BASIC MODEL VS EDIT MODEL

This machine comes in two versions. Refer to the following table for features available on your machine.

Functions		Edit type	Basic type
Copy Image Density Adjustment (Auto/Manual)		✓	✓
Auto Color Selection		✓	✓
Full Color		✓	✓
Back		✓	✓
Single Color		✓	✓
Twin Color		✓	✓
Original Image Type Selection		✓	✓
Paper Selection (Auto/Manual)		✓	✓
Reducing/ Enlarging	Preset R/E	✓	✓
	Zoom	✓	✓
	Size Magnification	✓	✓
	Directional Size Magnification	✓	✓
	Poster Mode	✓	✓
Shift/Book	Centering/Cornering	✓	✓
	Margin Adjustment	✓	✓
	Erase	✓	✓
	Single Copies	✓	✓
Color Creation	Color Conversion	✓	✓
	Color Erase	✓	✓
	Color Background	✓	✓
Image Creation	Outline	✓	✓
	Positive/Negative	✓	✓
	Shadow	✓	✓
	Mirror	✓	✓
	Slanted	✓	✓
	Image Repeat	✓	✓
	Image Overlay	✓	✓
Color Adjustment/ Memory	User Color Memory	✓	✓
	Single Color Adjustment	✓	✓
	Color Balance Adjustment	✓	✓
	Color Balance Sample	✓	✓
	Image Adjustment	✓	✓
Area Editing		✓	—
Interrupt Copying		✓	✓
Recall		✓	✓
Auto Reduce/Enlarge		✓	✓
Bypass Feed Copying		✓	✓
Duplex Copying		✓	✓
Default Setting		✓	✓
User Tools		✓	✓
Display Color		Full color	Black & white

2.3 NEWLY-ADDED OPERATING FEATURES

❍: Available ✗: Not Available

No.	Features	LILY (A172/A199)	DFC-ALPHA (A109)
1	Auto Image Density	Full Color & Black Copy	Black Copy only
2	Auto Color Calibration	❍	✗
3	Duplex Copying	❍	✗
4	Twin Color	❍	✗
5	Single Color	80 (+1) colors	8 colors
6	User Color	48 colors	3 colors
7	Color Back ground	84 (+1) colors	13 colors
8	Paint	84 (+1) colors	13 colors
9	Color Line	❍ (Edit type only)	✗
10	Frame Line	❍ (Edit type only)	✗
11	Image Overlay	❍ (Edit type only)	✗
12	Area Editing	See the next page	

1. Auto Image Density mode can be selected when in Full Color mode.
2. Auto Color Calibration can be performed by the user.
3. Using the by-pass feed tray, rear side copying is available.
4. Twin Color mode copies black parts in black and other parts in the selected color.
5. Single Color
   (8 colors x 4 density levels) + (12 user colors x 4 density levels) + 1 scan color = 81 colors
   * scan color = Edit type only
6. User Color
   12 colors x 4 density levels = 48 possible colors
   The total percentages of the mixed colors must be 255% or less.
7. Color Background
   (9 colors x 4 density levels) + (12 user colors x 4 density levels) + 1 scan color = 85 colors
   * scan color = Edit type only
8. Paint (Edit type only)
   (9 colors x 4 density levels) + (12 user colors x 4 density levels) + 1 scan color = 85 colors
   * Scan color = Edit type only
9. Color Line (Edit type only)
   In the Area Editing mode, designated lines can be colored.
   Available colors: 85 colors = 81 Single colors + (Bk x 4 density levels)

10. Frame Line
    In the Area Editing mode, the outlines of the designated areas can be colored.

11. Image Overlay
    This function makes a copy merging images of two originals.

12. Area Editing mode

	LILY (A172)	**DFC-ALPHA (A109)**
Area Shape	Rectangle, Polygon,Right Angle Polygon, Closed Loop, Line	Rectangle, Polygon, Right Angle Polygon, Closed Loop
Number of Areas	Maximum: 500 points However, 1 area or line must be of 30 or fewer points.	Creative Editing: 6 Areas 1 area must be of 10 orfewer points Color Editing: 6 Groups Maximum 500 points
Method of Designating Areas	Editor Pen and Cursor	Cursor only
Canceling Areas	Not only single points but already closed areas can be cleared.	Only single points before closing the area can be cleared.
Maximum Number of Groups/Areas	15 Groups Up to 3 job patterns can be applied. Changing the color of one job pattern will not affect the original settings of the job pattern.	Creative Editing: 3 Areas Color Editing: 6 Groups When in Color Editing mode, up to 3 job patterns can be applied, Changing the color of one job pattern will not affect the original settings of the job pattern.
Storing the Area Editing job settings in Program Mode	Always available.	Not available in Creative Editing mode. Available in Color Editing mode.
Canceling Groups	Available. However, canceling a group will remove it from the total number of groups.	Not available.

MEMO

3. MECHANICAL COMPONENT LAYOUT

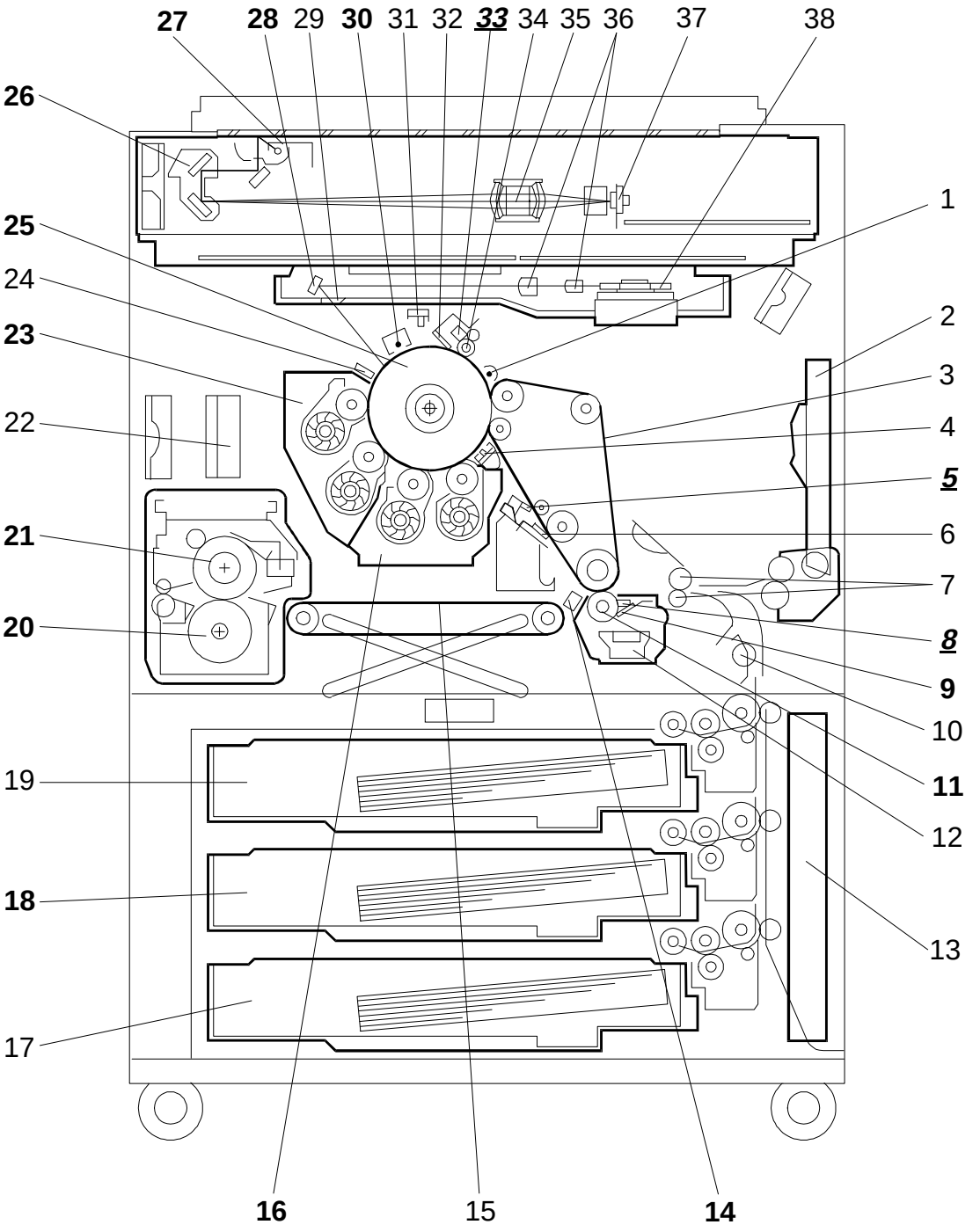

A172V502.wmf

Units different from A109
Bold Italic : Additional units
Bold : Modified units

1. Pre-cleaning Corona Unit
2. By-pass Feed Table
3. Transfer Belt
4. ID Sensor
5. ***Belt Lubricant Bar***
6. Belt Cleaning Blade
7. Registration Rollers
8. ***Roller Lubricant Bar***
9. **Transfer Roller Blade**
10. Relay Roller
11. **Transfer Roller**
12. Toner Catch Pan
13. Toner Collection Bottle
14. **Paper Discharge Plate**
15. Transport Belt
16. **Magenta/Yellow Development Unit**
17. 3rd Paper Tray
18. **2nd Paper Tray**
19. 1st Paper Tray
20. **Pressure Roller**
21. **Hot Roller**
22. Development Ozone Filter
23. **Black/Cyan Development Unit**
24. Drum Potential Sensor
25. **OPC Drum**
26. **2nd Scanner**
27. **1st Scanner**
28. **Drum Mirror**
29. Toner Shield Glass
30. **Charge Corona Unit**
31. Quenching Lamp
32. Drum Cleaning Blade
33. ***Drum Lubricant Bar***
34. Cleaning Brush
35. Lens
36. f-theta Lenses
37. CCD Board
38. Polygon Mirror

Deleted units from A109

- Lubricant brush

4. DRIVE LAYOUT

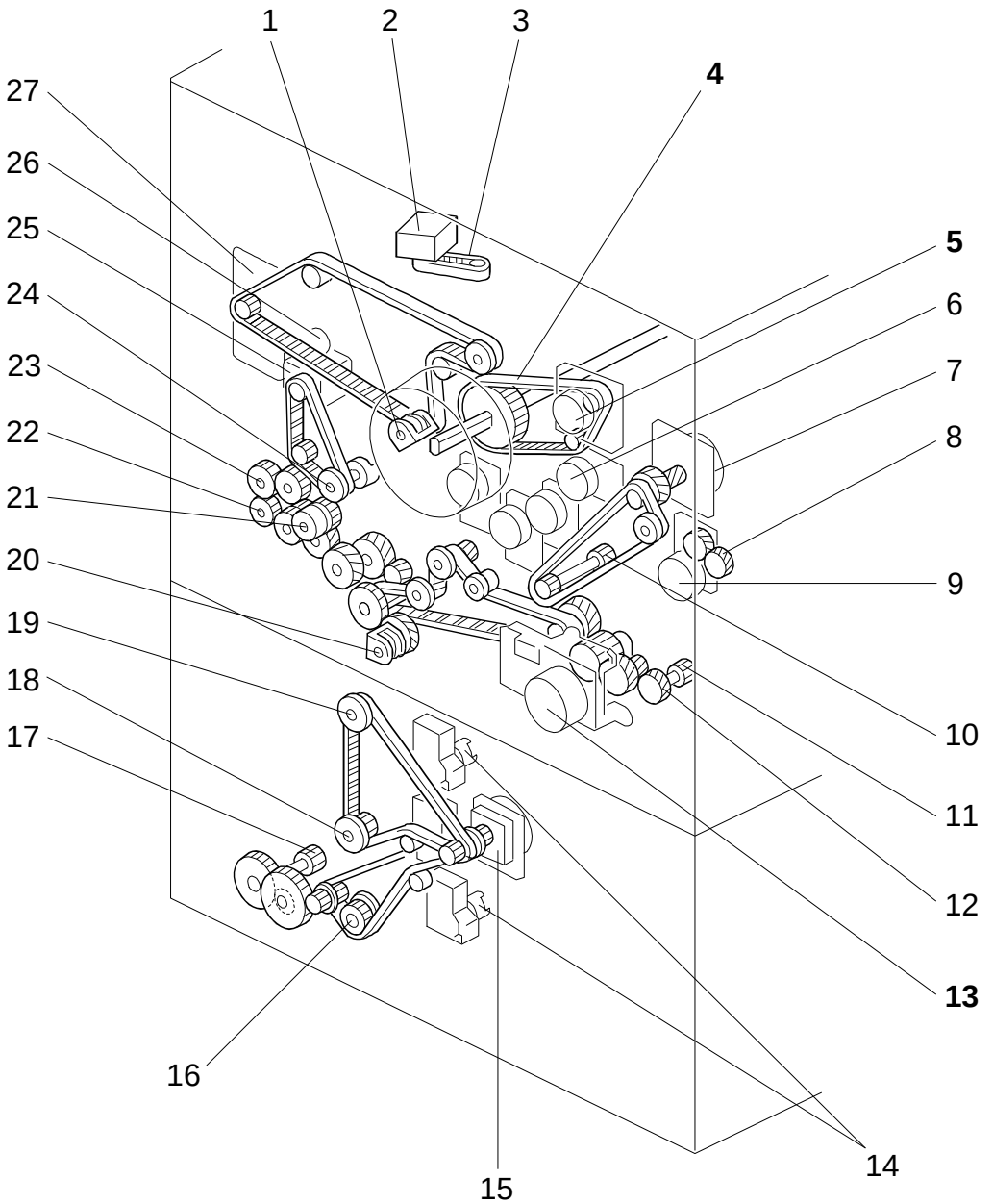

A172V503.wmf

Units different from A109
Bold Italic : Additional units
Bold : Modified units

1. Transfer Belt Position Clutch
2. Scanner Motor
3. Scanner Drive Pulley
4. **Drum Timing Belt**
5. **Drum Motor**
6. Bk-Sleeve Motor
7. Color-Development Drive Motor
8. Bk-Development Drive Gear
9. Bk-Development Drive Motor
10. Color-Development Drive Gear
11. Transport Unit Drive Gear
12. Fusing Unit Drive Gear
13. **Transport Motor**
14. Tray Lift Motors
15. Paper Feed Motor
16. 3rd Paper Feed Drive Pulley
17. Toner Collection Tank Drive Gear
18. 2nd Paper Feed Drive Pulley
19. 1st Paper Feed Drive Pulley
20. Transfer Roller Position Clutch
21. Registration Clutch
22. Relay Roller Drive Gear
23. By-pass Feed Drive Gear
24. Transfer Belt Drive Pully
25. Transfer Belt Motor
26. Lubricant Brush Clutch
27. Cleaning Motor

5. ELECTRICAL COMPONENT DESCRIPTIONS

Refer to the electrical component layout on the waterproof paper in the pocket for symbols and index numbers.

Symbol	Name	Function	Index No.
Printed Circuit Boards			
PCB1	DC power supply	Provides dc power.	20
PCB2	Lamp regulator	Provides dc power for the exposure lamp.	1
PCB3	AC drive	Provides ac power for the hot roller and pressure roller fusing lamps.	11
PCB4	High voltage supply - C/G	Supplies high voltage to the charge corona and grid plate.	12
PCB5	High voltage supply - B	Supplies high voltage to the Y/M/C/Bk sleeve rollers as development bias or to the OPC drum for drum potential sensor calibration.	26
PCB6	High voltage supply - T1/PCC/BR	Supplies high voltage to the belt bias roller, pre-cleaning corona, and cleaning bias roller.	13
PCB7	High voltage supply - T2	Supplies high voltage to the transfer roller.	17
PCB8	High voltage supply - D	Supplies high voltage to the paper discharge plate.	22
PCB9	Main control	Controls all copier functions both directly or through other control boards.	15
PCB10	Interface 1	Interfaces the input/output of electrical components with the main control board.	21
PCB11	Interface 2	Interfaces the input/output of electrical components with the main control board.	18
PCB12	Transfer belt motor drive	Controls the speed and direction of the transfer belt motor.	14
PCB13	Paper feed interface	Interfaces the input/output of electrical components in the paper supply unit with the main control board.	19
PCB14	Noise filter	Removes electrical noise.	23
PCB15	ID sensor	Detects the density of the ID sensor pattern.	127
PCB16	Operation panel	Controls the touch panel display and monitors the key matrix.	25
PCB17	Polygon motor drive	Controls the polygon motor speed.	8
PCB18	CCD	Converts the light reflected from the original into analog electrical signals for the three basic colors (R/G/B).	9
PCB19	Scanner control	Processes R/G/B video signals from the CCD board to be sent to the IPU board.	7
PCB20	Scanner drive	Interfaces the input/output electrical components in the optics cavity with the scanner control board.	3
PCB21	Image Discriminate	Used for anticounterfeiting.	6
PCB22	Display Editor interface	Interfaces the operation panel board with the IPU board (A172 copier only).	10

Symbol	Name	Function	Index No.
PCB23	Operation Panel Control	Controls the operation panel.	24
PCB24	IPU	Processes R/G/B video signals from the scanner control board and sends Y/M/C/Bk video signals to the LD unit.	2
PCB25	IPU interface	Changes the clock frequency of R/G/B video signals and also sends the synchronizing signal for the polygon motor.	4
PCB26	LD drive	Generates the laser beam for printing the latent image on the drum.	5
PCB27	Laser synchronizing detector	Detects the laser beam to control the start timing of main scan writing.	66
PCB28	Paper width detecting	Detects paper width in the by-pass feed table.	128
PCB29	Wire cleaner drive	Controls ths corona wire cleaner operation.	16
Motors			
M1	Bk - Development drive	Drives the Bk dual mixing roller.	46
M2	C - Sleeve	Turns the C sleeve roller in both directions.	31
M3	M - Sleeve	Turns the M sleeve roller in both directions.	35
M4	Y - Sleeve	Turns the Y sleeve roller in both directions.	34
M5	Drum	Turns the drum.	28
M6	Bk - Sleeve	Turns the Bk - sleeve roller in both directions.	30
M7	Transport	Drives the transport unit, fusing unit, transfer roller, and transfer belt cleaning unit.	45
M8	Color - Development drive	Drives the Y/M/C dual mixing rollers simultaneously.	27
M9	Cleaning	Drives the drum cleaning brush, the lubricant brush, and the transfer belt release mechanism.	32
M10	Scanner	Drives the 1st and 2nd scanners.	29
M11	Transfer belt	Turns the transfer belt drive roller in both directions.	33
M12	Paper feed	Drives the paper feed sections and the cam gear for the toner collection bottle.	39
M13	Polygon	Turns the polygon mirror.	47
M14	Bk - Toner supply	Drives the Bk toner transport and agitation mechanism.	43
M15	C - Toner supply	Drives the C toner transport and agitation mechanism.	42
M16	M - Toner supply	Drives the M toner transport and agitation mechanism.	41
M17	Y - Toner supply	Drives the Y toner transport and agitation mechanism.	40
M18	1st tray lift	Lifts the 1st tray bottom plate.	36
M19	2nd tray lift	Lifts the 2nd tray bottom plate.	37
M20	3rd tray lift	Lifts the 3rd tray bottom plate.	38

Symbol	Name	Function	Index No.
M21	Wire cleaner	Drives the wire/grid cleaner	44
Fan Motors			
FM1	Fusing exhaust	Removes heat from around the fusing unit.	49
FM2	Charge inlet	Provides air flow around the drum charge section.	48
FM3	Inner cooling	Provides air flow around the toner tank and development units.	57
FM4	IPU cooling	Provides air flow around the IPU board.	52
FM5	Polygon motor cooling	Provides air flow around the polygon motor.	53
FM6/7	Transport	Sucks in air to attract copy paper to the transport belts.	55/54
FM8/9	Development exhaust	Removes air and heat from around the drum and development units.	58/59
FM10	Optics exhaust	Exhausts air from under the lens housing cover.	51
FM11	LD cooling	Provides air flow to the LD unit.	50
FM12/13	Optics cooling	Blows air into the optics cavity.	60/61
FM14	DC power supply cooling	Provides air flow to transformers and radiation plates on the dc power supply board.	56
Sensors			
S1	By-pass feed table	Detects whether the by-pass feed table is open or closed.	73
S2	Oil end	Detects whether the silicone oil tank is nearly empty or not.	91
S3	Exit	Detects misfeeds.	100
S4	Transfer belt position	Detects whether the transfer belt is in contact with the drum or not.	67
S5	Humidity	Detects humidity and temperature to calculate the absolute humidity.	88
S6	Drum potential	Detects the drum surface potential.	125
S7	M - Toner density	Detects the toner density in the M development unit.	97
S8	Y - Toner density	Detects the toner density in the Y development unit.	96
S9	Bk - Toner density	Detects the toner density in the Bk development unit.	101
S10	C - Toner density	Detects the toner density in the C development unit.	98
S11	Transport	Detects misfeeds.	95
S12	Registration	Detects the leading edge or trailing edge of the copy paper to control the rotation of the paper feed and registration rollers.	74
S13	Registration guide set	Detects whether the registration guide plate is set or not.	70

Symbol	Name	Function	Index No.
S14	Bk - Toner End	Detects the toner end condition of Bk toner.	94
S15	C - Toner End	Detects the toner end condition of C toner.	93
S16	M - Toner End	Detects the toner end condition of M toner.	92
S17	Y - Toner End	Detects the toner end condition of Y toner.	90
S18	Transfer roller position	Detects whether the transfer roller is in contact with the transfer belt or not.	72
S19	By-pass paper end	Detects whether there is paper on the by-pass feed table or not.	71
S20	By-pass length	Detects whether paper on the by-pass feed table is longer than A4 (Letter) sideways or not.	69
S21	Toner overflow	Detects whether the toner collection bottle is full or not.	86
S22	1st lift	Detects the height of the paper stack in the 1st paper tray to stop the 1st tray lift motor.	76
S23	2nd lift	Detects the height of the paper stack in the 2nd paper tray to stop the 2nd tray lift motor.	77
S24	3rd lift	Detects the height of the paper stack in the 3rd paper tray to stop the 3rd tray lift motor.	80
S25	1st paper end	Detects whether there is paper in the 1st paper tray or not.	89
S26	2nd paper end	Detects whether there is paper in the 2nd paper tray or not.	87
S27	3rd paper end	Detects whether there is paper in the 3rd paper tray or not.	84
S28	1st paper feed	Controls the 1st paper feed clutch off/on timing and the 1st pick-up solenoid off timing.	82
S29	2nd paper feed	Controls the 2nd paper feed clutch off/on timing and the 2nd pick-up solenoid off timing.	85
S30	3rd paper feed	Controls the 3rd paper feed clutch off/on timing and the 3rd pick-up solenoid off timing.	83
S31	Original length - 1	Detects original length.	65
S32	Original length - 2	Detects original length.	63
S33	Original width	Detects original width.	106
S34	Scanner unit lift	Detects whether the scanner unit is lifted or not.	64
S35	Platen cover position	Informs the CPU whether the platen cover is up or down (related to APS/ARE function).	62
S36	Scanner HP	Informs the CPU whether the 1st and 2nd scanners are at the home position or not.	107
Switches			
SW1/2/3/4	Front door safety	Cuts the ac power line through RA1 and detects whether the front door is open or not.	102/103/ 104/105

Symbol	Name	Function	Index No.
SW5/6	Vertical transport set	Cuts the ac power line through RA1 and detects whether the vertical transport guide is open or not.	78/79
SW7	Main	Provides power to the copier. When it is at the standby position, the electrical power is supplied only to the heaters (drum, optics anti-condensation, tray, transfer belt/roller).	99
SW8	2nd paper size	Detects the paper size for the 2nd paper tray and whether the tray is set or not.	75
SW9	3rd tray set	Detects whether the 3rd paper tray is set or not.	81
SW10	1st paper size	Detects the paper size for the 1st paper tray and whether the tray is set or not.	68
Magnetic Clutches			
MC2	Transfer belt position	Controls the touch and release operation of the transfer belt by using drive from the cleaning motor.	108
MC3	By-pass feed	Starts paper feed from the by-pass feed table.	111
MC4	Registration	Drives the registration rollers.	110
MC5	Transfer roller position	Controls the touch and release operation of the transfer roller unit by using drive from the transport motor.	109
MC6	1st feed	Starts paper feed from the 1st paper tray.	113
MC7	2nd feed	Starts paper feed from the 2nd paper tray.	114
MC8	3rd feed	Starts paper feed from the 3rd paper tray.	115
Solenoids			
SOL1	Cleaning entrance seal	Controls the touch and release operation of the cleaning entrance seal on the transfer belt cleaning unit.	122
SOL2	Lubricant bar	Controls the touch and release operation of the lubricant bar.	124
SOL3	Cleaning blade	Controls the touch and release operation of the belt cleaning blade.	123
SOL4	By-pass pick-up	Controls the up/down movement of the pick-up roller in the by-pass feed station.	112
SOL5	1st pick-up	Controls the up/down movement of the pick-up roller in the 1st feed station.	121
SOL6	2nd pick-up	Controls the up/down movement of the pick-up roller in the 2nd feed station.	119
SOL7	3rd pick-up	Controls the up/down movement of the pick-up roller in the 3rd feed station.	117
SOL8	1st separation roller	Controls the up/down movement of the separation roller in the 1st feed station.	120

Symbol	Name	Function	Index No.
SOL9	2nd separation roller	Controls the up/down movement of the separation roller in the 2nd feed station.	118
SOL10	3rd separation roller	Controls the up/down movement of the separation roller in the 3rd feed station.	116
Lamps			
L1	Fusing	Provides heat to the hot roller.	144
L2	Pressure	Provides heat to the pressure roller.	143
L3	Exposure	Applies high intensity light to the original for exposure.	129
L4	Quenching	Neutralizes any charge remaining on the drum surface after cleaning.	126
Heaters			
H1	Lower tray (option)	Turns on when the main switch is off to keep paper dry in the 3rd paper tray.	138
H2	Upper tray (option)	Turns on when the main switch is off to keep paper dry in the 1st and 2nd paper trays.	134
H3/H4	Transfer belt/roller	Turns on when the transfer roller thermoswitch detects 20C° or less to keep the resistance of the transfer roller at a constant level.	136/137
H5	Optics anti-condensation	Turns on when the main switch is off to prevent moisture from forming on the optics.	148
H6	Drum	Turns on when the main switch is off to prevent moisture from forming around the drum.	131
Thermistors			
TH1	Fusing	Monitors the temperature of the hot roller.	133
TH2	Pressure roller	Monitors the temperature of the pressure roller.	142
Thermofuses			
TF1	Fusing	Opens the fusing lamp circuit if the fusing unit overheats.	132
TF2	Pressure roller	Opens the pressure roller lamp circuit if the fusing unit overheats.	141
Thermoswitches			
TS1	Optics	Opens the exposure lamp circuit if the 1st scanner overheats.	130
TS2	Transfer belt/roller	Detects the temperature around the transfer roller in order to keep the resistance of the transfer roller at a constant level.	135

Symbol	Name	Function	Index No.
Counters			
CO1	Black total	Keeps track of the total number of scans for black development in both black and color copy modes.	145
CO2	Full color total	Keeps track of the total number of scans for Yellow, Magenta, and Cyan development in both single and full color copy modes.	146
Others			
CB1	Circuit breaker	Provides back-up high current protection for the electrical components.	139
NF1	Noise filter	Removes electrical noise.	140
CC1	Choke coil	Removes high frequency current.	147

SECTION 2

DETAILED DESCRIPTIONS

1. MAJOR DIFFERENCES FROM THE DFC-ALPHA (A109)

No.	Item	Contents	Details
Process Control			
1	Toner End Detection	The toner end detection software has been eliminated.	A toner end sensor has been added for each color. See 6.2 in section 2 for details.
2	Latent Image Control	The process control for latent image control has been modified.	See 2.1 in section 2 for details.
3	Toner Density Control	VCNT Correction has been modified.	See 2.2 in section 2 for details.
Around The Drum			
1	OPC Drum	The OPC drum layer material (Charge Transfer Layer: CTL) has changed.	To reduce ozone and NOX reaction with the drum (to prolong the lifetime of the drum).
2	Drum Charge Wire	The system has been changed from a double-wire to a single-wire scorotron.	See 3.1 in section 2 for details.
3	Drum Charge Wire/Grid Cleaning	Drum charge wire/grid cleaning has been newly added.	See 3.2 in section 2 for details.
4	Drum Cleaning	Drum lubrication has been newly added.	See 3.4 in section 2 for details.
		The cleaning brush has been changed from a looped-bristle type to a straight-bristle type.	To apply the lubricant evenly on the drum. See 3.4 in section 2 for details.
Optics			
1	Exposure Lamp	The number of exposure lamp's lighting points has increased from 7 to 9.	To decrease white bands on copies caused by the exposure lamp's lighting points.
2	Infra-red Filter	The thickness of the infra-red filter has increased from 0.8 mm to 1.0 mm.	To achieve better copy quality for originals containing infra-red radiance. (prevents black areas from becoming reddish)
3	2nd/3rd Mirrors	A heavier stabilizer has been installed on the 2nd/3rd mirrors.	To decrease scanner banding to achieve better results for auto letter/photo separation.
4	Exposure Glass	A more high-conductivity glass is used.	To decrease the possibility of the exposure glass becoming dirty with dust particles.
5	Reflectors	Reflectivity has increased because of surface improvements.	To decrease the temperature around the optics cavity due to less power to the exposure lamp.

No.	Item	Contents	Details
6	Optics Cooling Fan Filter	The filter material has changed. It is easier to replace the filter.	The air flow has improved to reduce temperature rises in the optics cavity. For replacement, see section 5 for details.
Image Processing			
1	RGB Filter	The RGB filter coefficient for each copy mode (letter/photo) has been changed.	To improve gradation and reproduction quality.
2	Color Correction	New matrixes and masking coefficients have been added to match the new copy modes.	See 4.4 in section 2 for details.
3	Image Separation IC	The image separation IC has been changed.	To reduce photo/letter image separation errors in auto detect mode.
Laser Exposure			
1	Drum Mirror	A heavier stabilizer has been installed on the Drum mirrors.	To reduce the occurrence of banding on copies.
Development			
1	Development Sleeve Roller	The sleeve rollers have been changed to a sand-blast type.	To eliminate the 1.25 mm horizontal lines in halftone image areas caused by the grooves on the sleeve roller.
Toner Tank			
1	Toner Tank	A toner end sensor has been added for each color.	See 6.2 in section 2 for details.
		The green lever has been eliminated.	See 6.2 in section 2 for details.
		A toner tank detection mechanism has been added. When the tank is pulled out, it is disconnected electrically from the main body.	See 6.2 in section 2 for details.
Transfer Belt			
1	Transfer Belt Bias	The number of threshold levels that decide transfer belt bias depending on environmental conditions has changed from 2 to 4.	See 7.1 in section 2 for details.
2	Transfer Belt Cleaning	The belt lubricant mechanism has changed to apply lubricant directly to the transfer belt.	To prevent partial blanking of lines (due to incomplete toner transfer) from appearing on copies. See 7.2 in section 2 for details.

No.	Item	Contents	Details
Transfer Roller			
1	Transfer Belt/Roller Heater	The transfer roller heater has been newly added to keep the temperature around the transfer roller unit at 20°C.	See 8.1 in section 2 for details.
2	Transfer Roller	The material of the transfer roller has been changed.	To improve transfer efficiency.
3	Transfer Roller Bias	The number of threshold levels that decide transfer roller bias depending on environmental conditions has been changed from 2 to 4.	See 8.2 in section 2 for details.
		Transfer roller bias settings for duplex copying have been newly added.	See 8.2 in section 2 for details.
4	Paper Discharge Plate	The installed angle of the paper discharge plate has changed.	To prevent toner scatter from appearing around solid areas in duplex mode. See 8.4 in section 2 for details.
5	Paper Discharge Plate Output	The output of the paper discharge plate changes depending on the copy paper.	See 8.4 in section 2 for details.
6	Transfer Roller Cleaning	The roller lubricant mechanism has been newly added.	See 8.3 in section 2 for details.
Fusing Unit			
1	Hot Roller	The material of the hot roller has been changed.	To make it suitable for duplex copying.
2	Pressure Roller	The material of the pressure roller has been changed.	To make it suitable for duplex copying.
3	Pressure Roller Cleaning	The pressure roller cleaning mechanism has been newly added.	See 9.1 in section 2 for details.
Paper Feed			
1	2nd Paper Feed Station	The 2nd paper feed station has been changed to the universal tray type.	To meet customers' requests.
Operation Panel			
1	LCD (Liquid Crystal Display)	The LCD has been changed to a 640 x 480 dot type. A172: Full Color Display A199: B/W Display	For easier operation and editing.

No.	Item	Contents	Details
2	Operation Panel Control	The operation panel control board has been newly added. The main control board no longer controls the operation panel.	—
3	Operation Panel Self Diagnostic Mode	The operation panel self diagnostics mode has been newly added.	For easier servicing of the machine.
Others			
1	Drum Drive	The drum drive mechanism has been changed from a series of gears to a timing belt system.	Banding on copies are reduced. See 3.3 in section 2 for details.
2	Copier Rear Frame	The thickness of the rear frame has changed from 1.6 mm to 2.0 mm	Banding on copies are reduced.
3	Fusing exhaust ozone filter	This filter has been eliminated.	Because the ozone amount has been decreased due to the new charge corona unit.
Options			
1	DJF (A610)	See the DJF section for details.	—
2	15-Bin Sorter (A322)	See the Sorter section for details.	—
3	Holder (A702-18)	The color of the exterior covers has been changed.	—
4	Film Projector Unit (A718)	See the Film Projector Unit section for details.	—

2. PROCESS CONTROL

2.1 LATENT IMAGE CONTROL

2.1.1 DRUM POTENTIAL SENSOR CALIBRATION

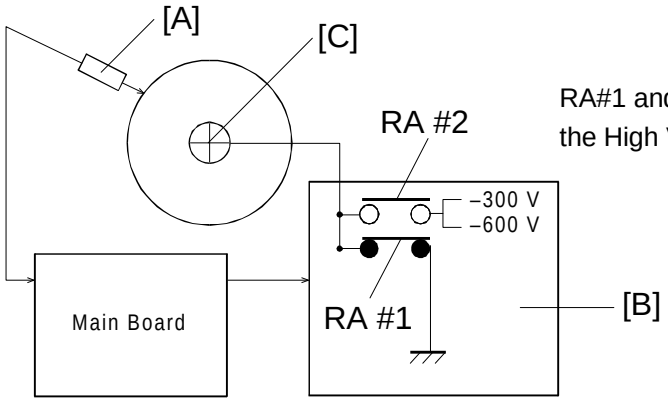

RA#1 and RA #2 are packed in RL1 on the High Voltage Supply Board – B.

A172D507.wmf

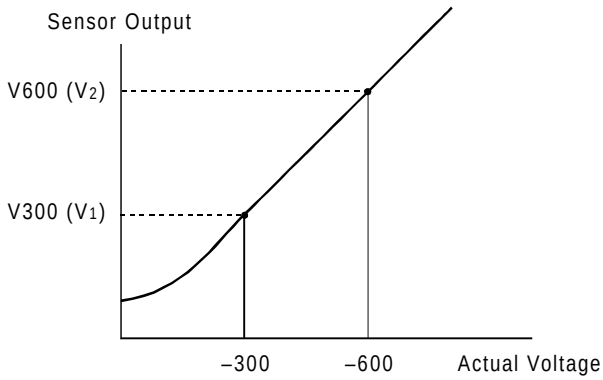

A172D508.wmf

The drum potential sensor [A] output is calibrated during the process control self check.

The High Voltage Supply Board - B [B] has two relay contacts. Usually RA #1 grounds the drum. However, during the self check, the main CPU turns RA #2 on and RA #1 off and applies the test voltage to the drum shaft [C]. In this condition, the drum is isolated from the ground (floating).

By measuring the output of the drum potential sensor when –300 V (V_{300}) or –600 V (V_{600}) are applied to the drum, the sensor output is calibrated automatically. (The machine can now determine the actual drum potential from the potential sensor output.) Using -300 and -600 V results in a more accurate calibration of the sensor, since the voltage applied to the supply board is much closer to the actual value, which is –450 V for V_B (Development bias) during the process control self check.

2.1.2 GRADATION PATTERN DETECTION

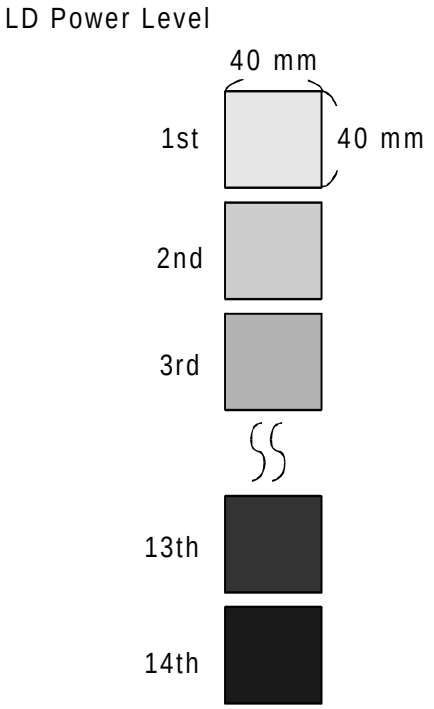

A172D509.wmf

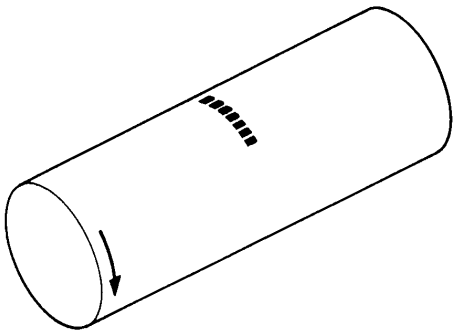

A172D510.img

A latent image of a 14-grade gradation pattern is created for each color (Bk, C, M, Y) by changing the LD input current.

By creating 14 grades, the machine can achieve a more precise development gamma factor, resulting in a more reliable pointer control.

2.2 TONER DENSITY CONTROL

2.2.1 VCNT CORRECTION

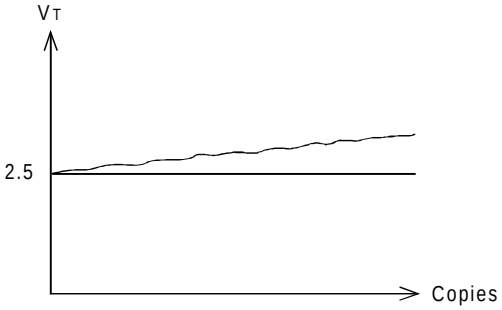

A172D511.wmf

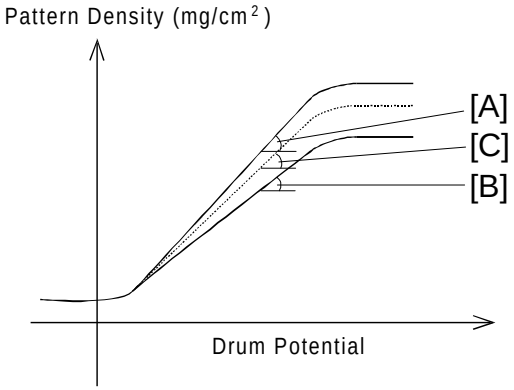

A172D512.wmf

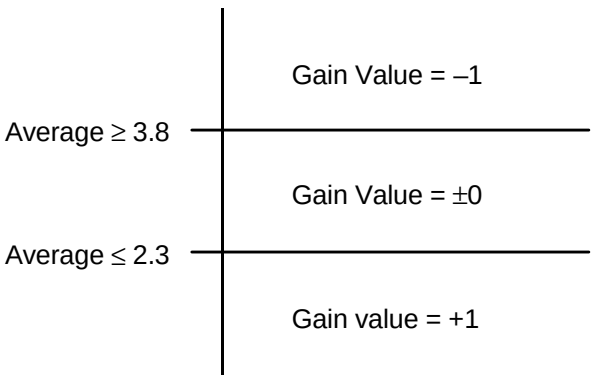

A172D513.wmf

Even if the toner concentration is constant, the toner density sensor output gradually increases after new developer is installed because of developer characteristics. Because of this, the machine believes that the amount of toner in the developer has reduced. This causes the machine to increase the toner concentration because the machine controls the toner concentration so that VT stays constant.

To compensate for this, the VCNT gain is corrected by using the development gamma curve made from the 14-grade pattern during process control self check.

The present gamma curve [A] and the previous gamma curve [B] are compared, and the average [C] is calculated. As shown in the diagram, the gain is decreased by 1 when the average gradient is 3.8 or more. The maximum compensation value is –16.

Because of this new VCNT correction system, the VCNT correction previously performed every 200 copies is no longer necessary. Also, due to the use of the average value, over-reduction of the gain is avoided.

2.2.2 FORCED TONER CONSUMPTION MECHANISM

For customers that mainly make copies other than full color copies, the toners other than the selected colors are not used. For these toners, the amount of toner inside the development unit will gradually increase every 50 copies, since toner agitation is performed at this interval, and some toner is added at this time (see section 6.1). If this condition continues, toner scattering and toner density control failure may occur.

To compensate for this, along with the transport screw gear modification, the machine checks the output of each TD sensor during the process control self check. If the machine detects $V_{REF}-V_T \geq 0.3$ V, it determines that there is too much toner inside the development unit and makes a pattern across the whole width of the drum to forcibly consume some toner.

2.2.3 FORCED TONER SUPPLY MECHANISM

When the machine makes consecutive copies that have a large portion of solid image areas, toner supply and agitation from the toner tank cannot keep up with the toner consumption speed, causing lighter copies, toner scatter, and related SC codes to appear.

To compensate for this, the output of each TD sensor is checked every copy. When the machine detects $V_T-V_{REF} \geq 0.5$ V five times consecutively, it determines that the amount of toner in the development unit is low. At this moment, the copy job is interrupted, and toner is fed into the development unit forcibly. After forced supply, the machine resumes the copy job.

3. DRUM UNIT

3.1 DRUM CHARGE

This copier uses a single corona wire scorotron system to charge the drum.

The corona wire applies a negative charge to the drum surface. The striped stainless steel grid plate makes the corona charge uniform and controls the negative charge on the drum surface to -650 V (standard) by applying a negative grid bias voltage.

The high voltage supply board –C/G gives a constant corona current (–450 μA) to the corona wire, and controls the grid voltage (based on the results of process control) to maintain proper image density. Grid voltage is controlled to match changing factors such as a dirty grid plate, dirty charge corona casing, and OPC chargeability.

The use of the single wire scorotron system has the following advantages.

- The amount of corrosive gas (O_3, NO_X) is reduced due to the decrease in total current.
- The life time of the drum is increased due to the decrease in the amount of corosive gas.
- Uneven charge problems are alleviated due to the increase of the amount of current per meter of the corona wire.

3.2 DRUM CHARGE CORONA WIRE/GRID CLEANING

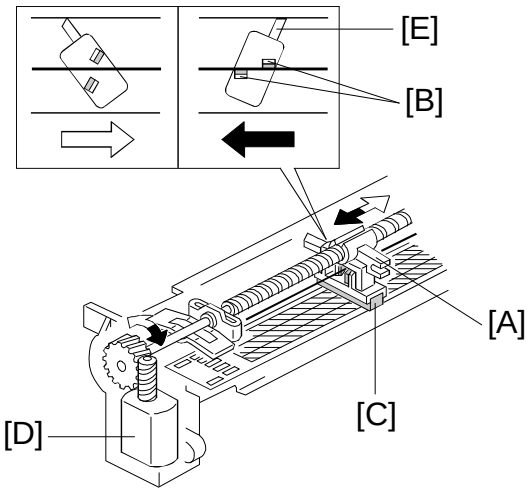

A172D524.wmf

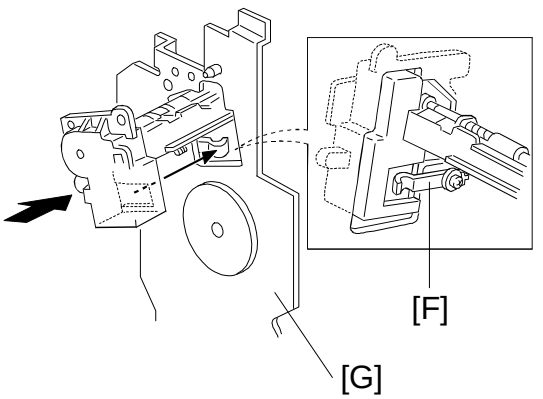

A172D525.wmf

The flow of air around the charge corona unit may deposit toner particles and paper dust on the corona wire or corona grid plate. These particles may interfere with charging and cause uneven charge on the drum.

The wire cleaner [A], which consists of the wire cleaner pads [B] and the grid plate sponge [C], automatically cleans the wire and the inside of the grid plate to prevent such problems from appearing.

The wire cleaner is driven by a dc motor. Normally the cleaner is located at the front end (this is home position). Whenever the main switch is turned on while the hot roller temperature is below 80°C (before process control), the wire cleaner motor [D] turns on to bring the wire cleaner to the rear end of the corona unit and back to the home position. The corona wire and the inside of the grid plate are cleaned at the same time. This procedure can be manually performed with an SP mode as well (<2> SP Test, page 4).

When the cleaner moves from the home position to the rear position (the white arrow in the illustration), only the grid plate is cleaned since the grid plate sponge is always in contact. When coming back, the rib [E] on the cleaner is forced by the opening in the corona casing, and the wire cleaner pads contact the corona wire.

There are no home position or return position sensors. The wire cleaner drive board at the back of the machine monitors the current applied to the motor. When the wire cleaner reaches the end, it is stopped and the motor is locked. At this time, the current of the motor slightly increases and the drive board detects that it is time to rotate the motor in reverse.

Also, a grounding plate [F] is installed on the back side of the drum stay [G] to reduce the electrical noise generated from the cleaner motor.

3.3 DRIVE MECHANISM

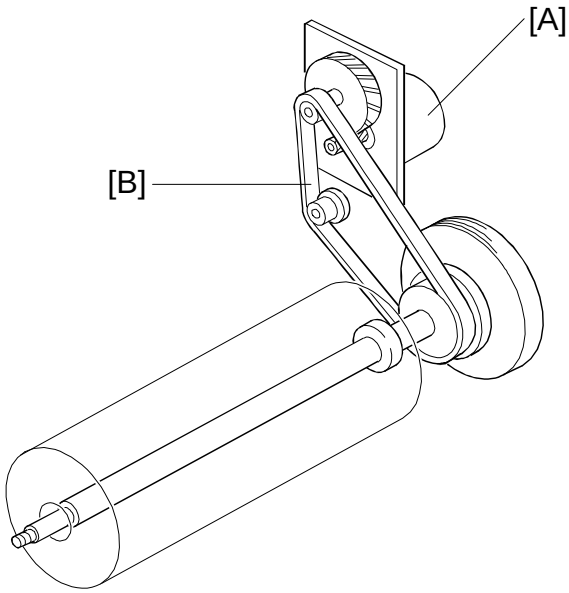

A172D500.wmf

The drum is driven by the drum motor [A] through a timing belt [B].

By the use of a timing belt system, banding on copies are reduced due to the lower mechanical load.

3.4 DRUM LUBRICATION MECHANISM

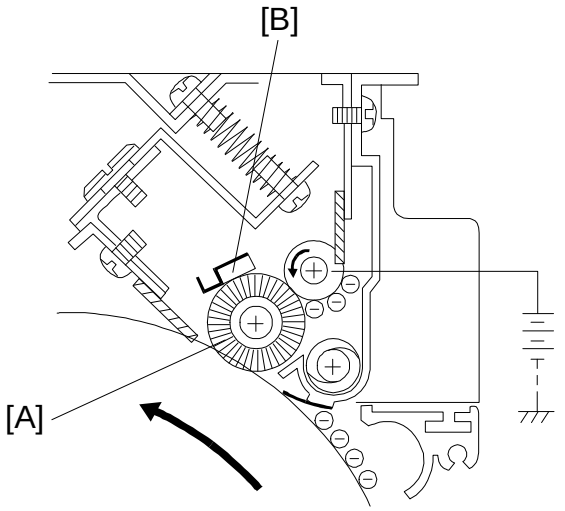

A172D501.wmf

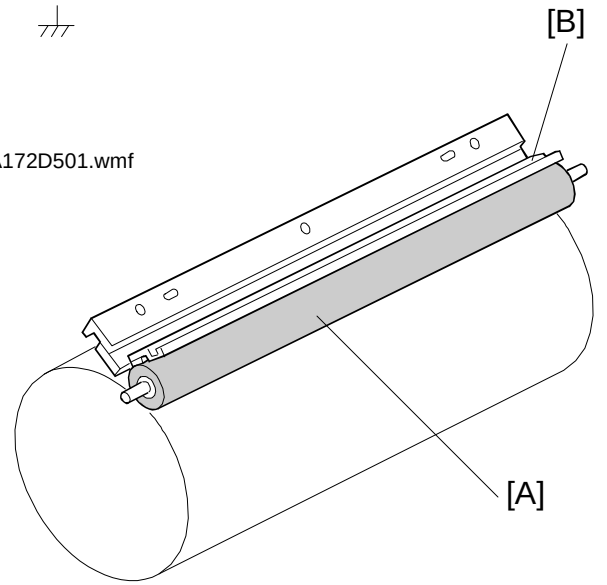

A172D502.wmf

While the drum rotates, the cleaning brush [A] distributes lubricant from the drum lubricant bar [B] to the surface of the drum.

This mechanism improves the copy quality, especially for letter areas in full color mode, since it helps the toner transfer to the transfer belt. It also improves the efficiency of drum cleaning.

To apply the lubricant to the surface of the drum evenly, a straight-bristle type is used for the drum cleaning brush.

4. IMAGE PROCESSING

4.1 IPU SECTION BLOCK DIAGRAM

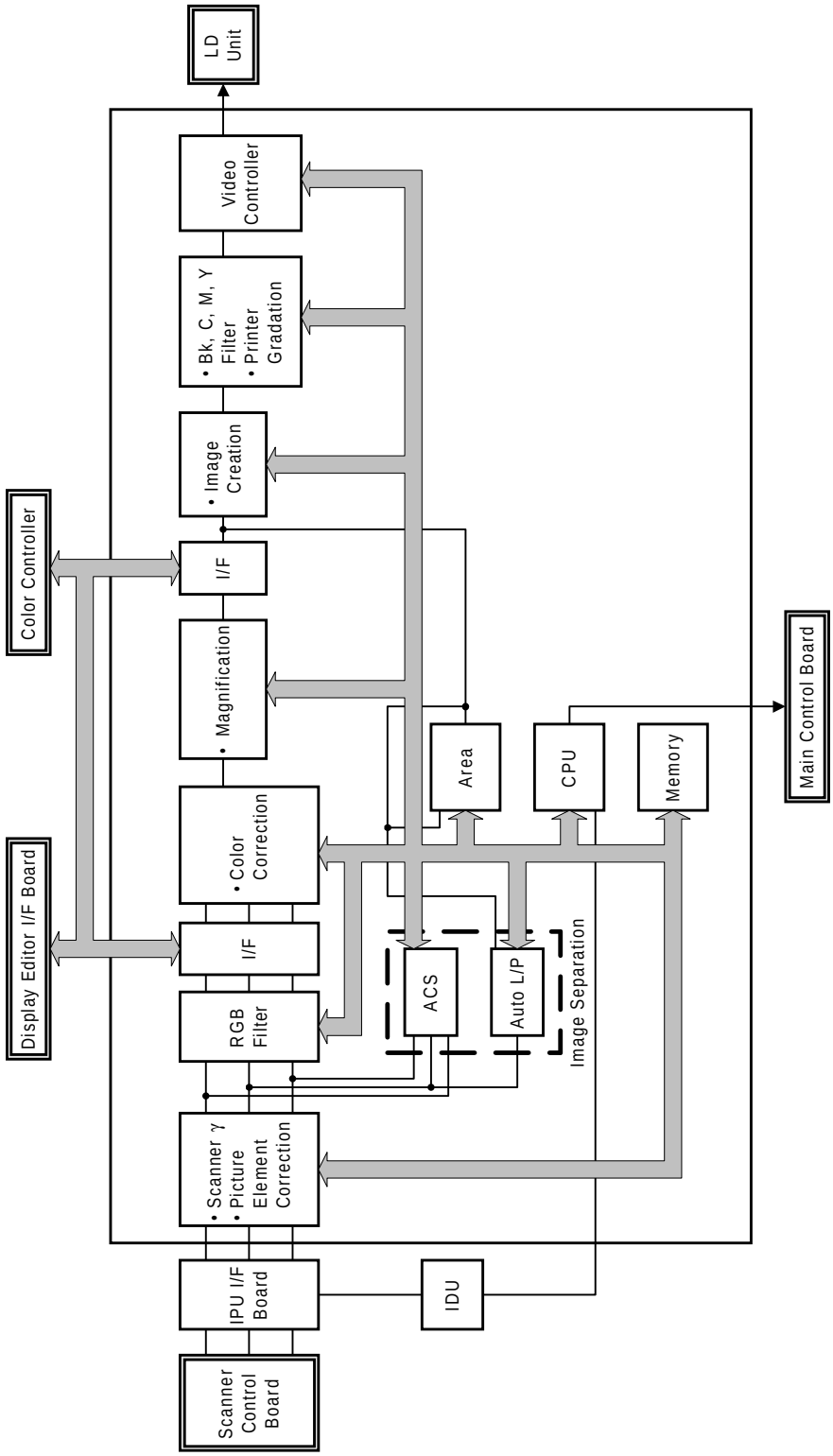

A172D535.wmf

4.2 ACS (AUTO COLOR SELECTION)

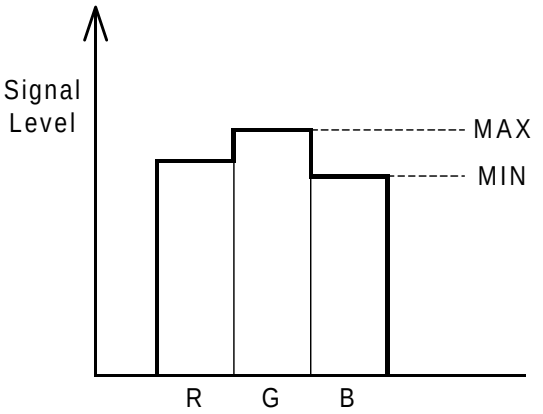

*MIN: Also known as "RGB Common Data"

A172D526.wmf

In Auto Color Selection mode, the Black Copy mode or Full Color mode is automatically selected to match the original image. During the 1st scanning cycle, the latent image is developed with amount of black toner according to the corrected R/G/B video signals. If the original does not have any color area, the 2nd scanning is aborted, and the developed image is transferred from the transfer belt to copy paper. Then the black and white copy comes out. If the original has a color area, copying resumes in the full color copy mode (4 scans).

To recognize if the original has a color area or not, the R/G/B video signals are compared. If the maximum difference among R/G/B signal levels (MAX-MIN in the above diagram.) is within a certain range, the original is considered to be black and white.

This range can be changed by the user.



Black: The range is wider
Color: The range is narrower

Also, the user can select either B/W Priority or Color Priority, to reproduce the B/W areas or Color areas well, when the ACS mode is selected.



*Factory Setting = Color Priority

When Color Priority is selected

<ACS: Color Priority>

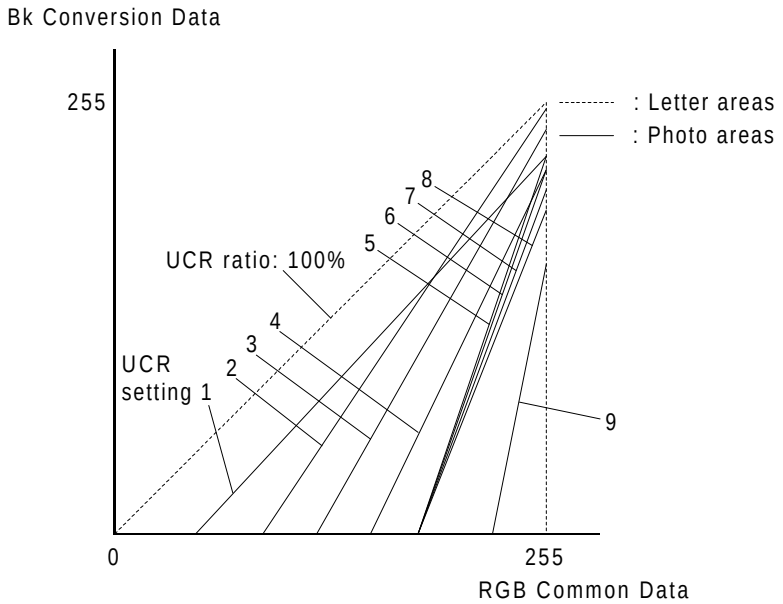

A172D527.wmf

a) Letter areas
The UCR ratio is set to 100% to reproduce the letter areas well. Black toner is always used if RGB Common Data is greater than zero.

b) Photo areas
In photo areas, black toner is not used until RGB Common Data reaches a certain value, which depends on the UCR adjustment setting (see below). This can be one of 9 settings as shown in the above illustration.

Also, the UCR ratio changes with image density. The steeper the gradient in the above graph, the faster the UCR ratio increases with image density (as RGB Common Data increases).

The UCR range for the photo areas can be changed over 9 levels by the user (Image Adjustment: UCR Adjustment) to get the best color reproduction.

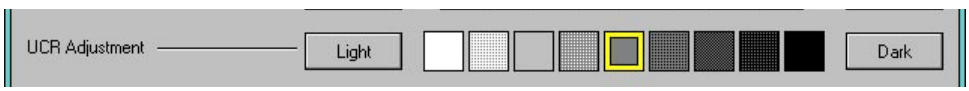

When B/W Priority is selected

<ACS: B/W Priority>

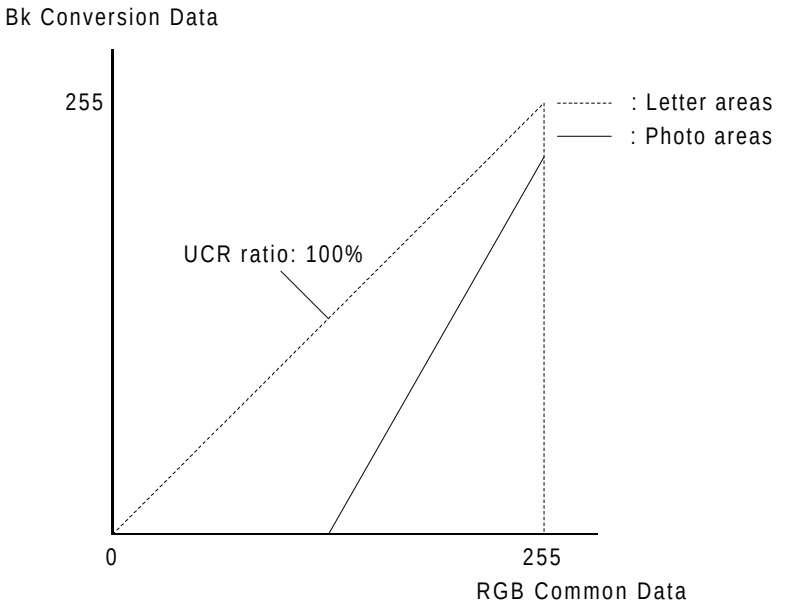

A172D528.wmf

a) Letter areas
The UCR (Under Color Removal) ratio is set to 100% to reproduce the letter areas well.

b) Photo area
The UCR ratio is set to a higher value than for the Color Priority default setting (level 5), so that low image density areas of B/W originals can be reproduced well.

4.3 RGB FILTER

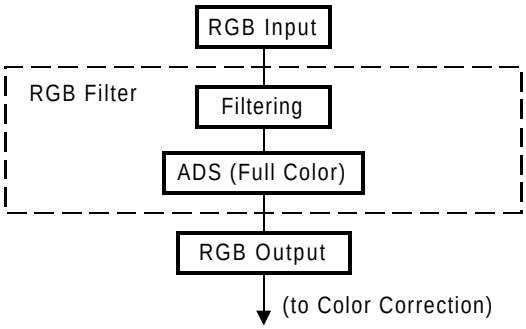

A172D529.wmf

4.3.1 Filtering

To improve the image reproduction, the appropriate filter coefficients are applied to the R/B/G video signals, depending on the selected image modes (letter/photo) or the result of Auto Letter/Photo separation.

4.3.2 Auto Image Density Control (Full Color)

This mode prevents the background of an original from appearing on copies. The Auto Image Density Level can be changed using the User Tools. (There are 5 levels.)

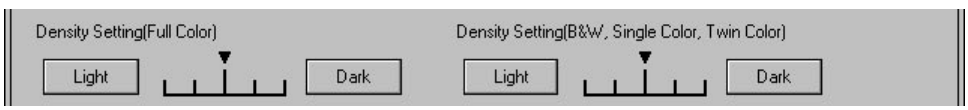

When Full Color mode and Auto Image Density mode are selected, video signals corresponding to the background are detected and their output level is set to zero. The threshold for detecting the background can be changed over 5 levels using the User Tools.

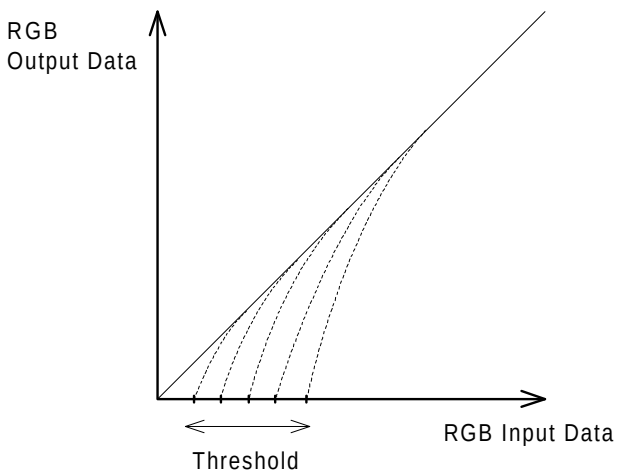

A172D533.wmf

4.4 COLOR CORRECTION

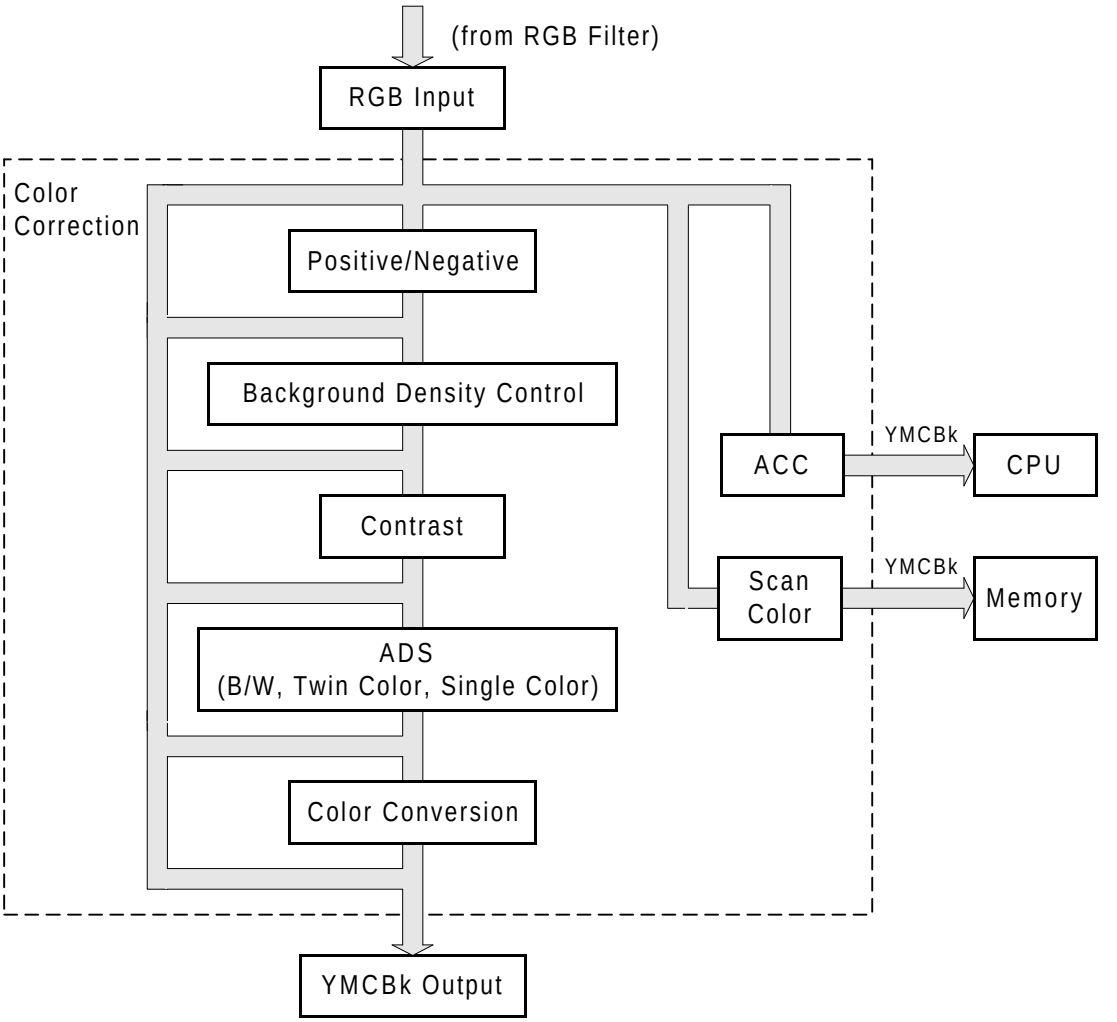

A172D541.wmf

4.4.1 Image Modes

RGB video signals are converted to YMCBk video signals using a color conversion table.



A172D530.wmf

a) Printed Photo/Glossy Photo mode
A suitable color conversion table for Printed Photo or Glossy Photo mode is applied to improve the reproduction of such originals.

b) Copied Photo/Map mode
A suitable color conversion table for Copied Photo or Map mode is applied to improve the reproduction of such originals.

c) Auto Letter/Photo mode
At the factory setting, Printed Photo mode is applied for the photo areas detected by the Auto Letter/Photo mode.
The user can change this setting so that either of the following modes will be applied for photo areas.

- Printed Photo mode
- Glossy Photo mode
- Copied Photo mode



4.4.2 Background Density Control

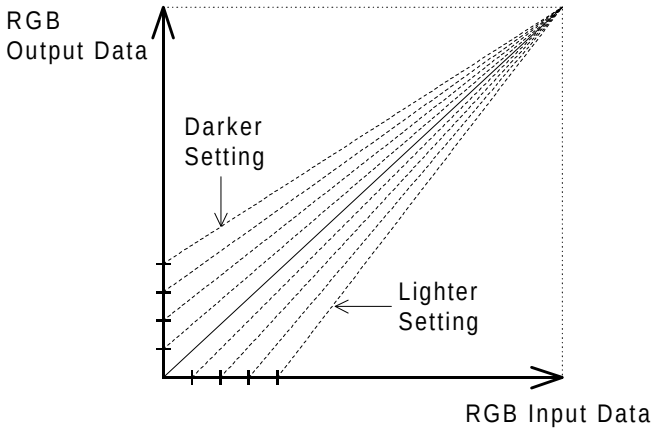

A172D531.wmf

There a 9 levels of background density controls.

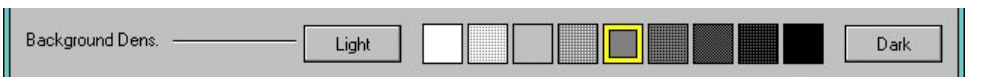

a) Lighter setting
Small effect on the high image density areas, but the low image density areas are reproduced lighter or erased.

b) Darker setting
Small effect on the high image density areas, but the low image density areas are reproduced darker.

When combining the Full Color mode and Auto Image Density mode, the background density may be reproduced lighter or erased. To reproduce the color background well, it is necessary not to use Auto Image Density mode but to adjust the background density control to a darker setting.

4.4.3 Contrast

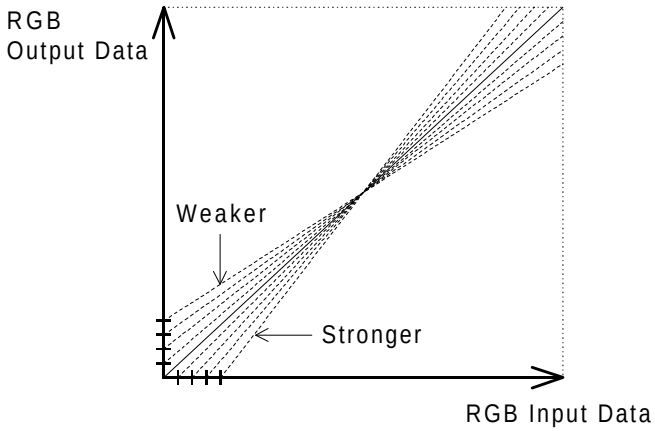

A172D532.wmf

Contrast between light and dark areas of the image can be adjusted. There are over 9 levels.



a) Strong setting
The density of the dark image areas is increased and the density of the light image areas is decreased.

b) Weaker setting
The density of the dark image areas is decreased and the density of the light image areas is increased.

4.4.4 Auto Image Density Control (B/W, Twin Color, Single Color)

This mode prevents the background of an original from appearing on copies. The Auto Image Density Level can be changed using the User Tools. (There are 5 levels.)

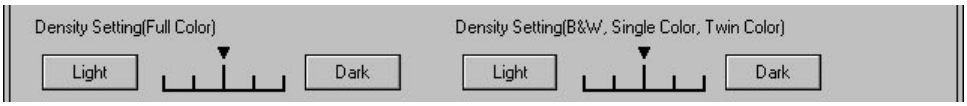

When B/W, Single Color, or Twin Color and Auto Image Density mode are selected, this function combines the Background Density Control and Contrast as shown in the following table.

ADS Level		Background Density Control	Contrast
↑	**+2**	–1	0
Dark	**+1**	–1	+1
Standard	**0**	–1	+2
Light	**–1**	–2	+2
↓	**–2**	–2	+3

4.5 ACC (AUTO COLOR CALIBRATION)

Test Pattern

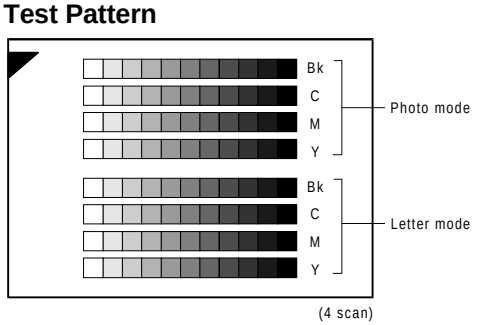

A172D534.wmf





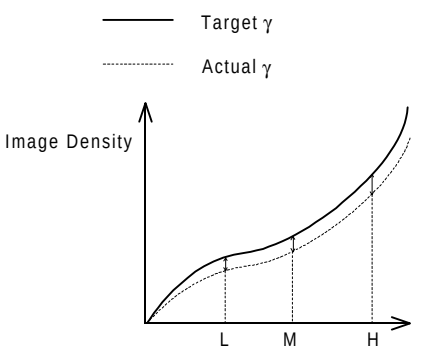

A172D540.wmf

Auto Color Calibration can be performed using the User Tools.

A test pattern, including the patterns for Letter mode and Photo mode, will be printed first. The user then scans the test pattern. The resulting printer gamma curve depends on the results of scanning the test pattern.

There are adjustment tables for L, M, H, and ID MAX values stored in the machine. The machine applies these to approximate the actual curve to the target curve as closely as possible.

If needed, the printer gamma curve can be adjusted further manually in the SP mode. (See section 5, Color Balance Adjustment)

Also, a printer gamma setting can be stored in memory (temporarily or permanently) and curve can be recalled. When the ACC is performed, the current printer gamma setting will be automatically stored in the temporary memory, which can be recalled after the ACC is performed. (See Section 4, *Service Tables*, *SP Table*.)

4.6 YMCBk FILTER

In addition to the RGB filter, the most suitable software filter is applied to YMCBk video signals to improve the image reproduction.

- High Contrast filter (emphasizing edges)
- Smoothing filter

		Soft (Smoothing) ←			Standard	→ Sharp (Emphasizing Edges)		
Setting		**1**	**2**	**3**	**4**	**5**	**6**	**7**
Applied Filter Table	**Letter mode**	1	2	3	4	5	6	7
	Photo mode	0	1	2	3	4	5	6

The filter can be selected by the user by adjusting the Sharp/Soft level (Image Adjustment).



5. DEVELOPMENT

5.1 DEVELOPMENT SLEEVE CLEANING

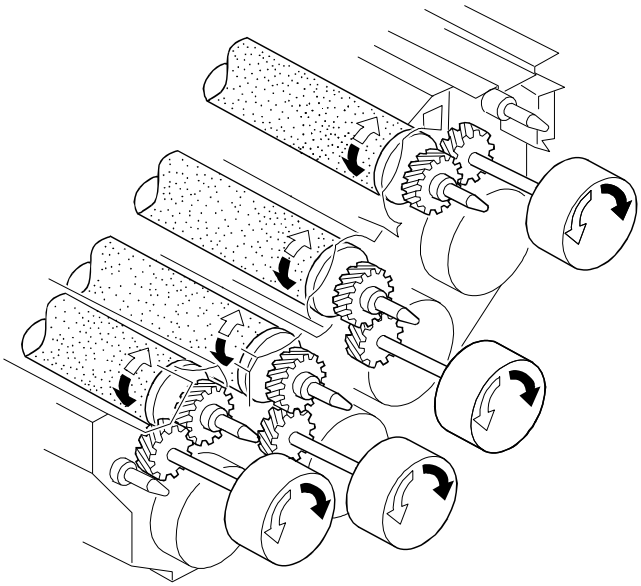

A172D506.wmf

To achieve a faster CPM for black and white originals when copying 1 to 1 or using Auto Color Select (ACS) mode, the development sleeve cleaning mode previously performed for every original is now performed periodically.

For A4 or smaller size originals, a maximum of 40 black and white copies can be made without the machine stopping to perform development sleeve cleaning (20 copies for originals larger than A4 size). If a color original is detected in between when using ACS mode, the cleaning mode is executed, and the original counter will be reset. This setting can be changed with SP mode.

6. TONER TANK

6.1 TONER AGITATION

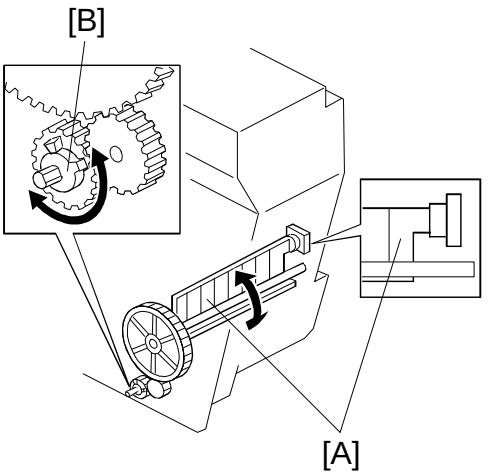

A172D503.wmf

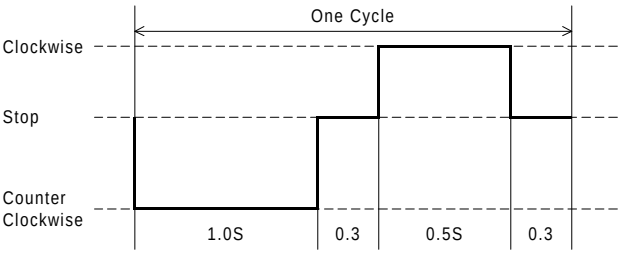

A172D504.wmf

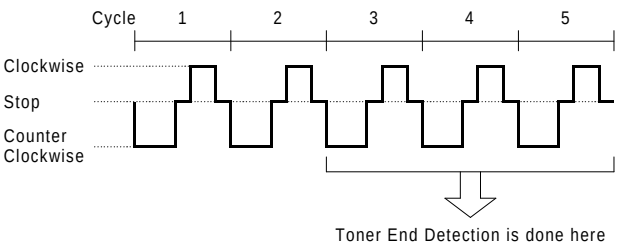

A172D505.wmf

Under the following conditions, the toner agitator [A] inside each toner tank rotates to agitate the toner inside the toner tank.

- Whenever the main switch is turned on while the hot roller temperature is below 110°C.
- After a multi-copy job is completed and more than 50 copies have been made since the last toner agitation.
- When the optional ARDF is used, the machine stops the copy cycle after 150 copies have been made since the last toner agitation.
- When the toner tank is pushed in during a near toner end or toner end condition.

As shown above, one cycle of this agitation consists of rotating in both directions, and is performed for five consecutive cycles.
In order to prevent unnecessary toner from entering the development unit during agitation, the transport screw gear [B] has some play before rotation is transmitted to the transport screw.

6.2 TONER END DETECTION

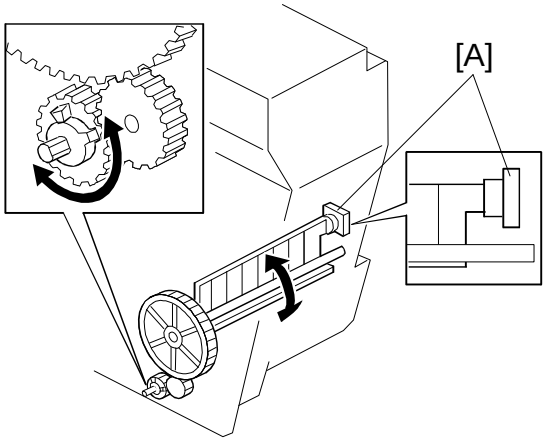

A172D503.wmf

Four toner end sensors [A] (which are piezoelectric) are installed on the toner tank to monitor the near end condition for each color toner. Toner end detection is performed during toner agitation, and the detection sequence is as follows.

1. Near Toner End Condition
   The machine starts sampling the output of the toner end sensor every 0.1 second during the last three cycles of the toner agitation process (see the previous page). If a no toner condition is detected for 90% of the samples, the machine enters the near toner end condition.

2. Toner End Condition
   When a near toner end condition is detected, a total of 30 copies can be made using the toner for which the near end condition was detected. After this, the machine enters the toner end condition and copying using that toner is disabled.

3. Toner End Recovery
   When the front door is opened and the toner tank rails are pulled out and in, the machine starts to perform the toner end recovery procedure. The sequence and the recovery condition is the same as for the near toner end condition detection.

If the toner end condition is not cleared, copying using that particular color toner is disabled. This prevents the customer from clearing the near end or toner end condition by simply opening and closing the front cover or turning the main switch off and on.

The green lever which was previously installed to prevent toner from flowing into the development unit has been eliminated, due to the change in the toner end detection mechanism.

7. TRANSFER BELT UNIT

7.1 TRANSFER BELT BIAS

Transfer Belt Bias (Face Side: Normal Humidity)

		Copy Mode			
		1C	**2C**	**3C**	**4C**
Dev. Cycle	**1st**	1410	1410	1410	1410
	2nd		1490	1490	1490
	3rd			1575	1575
	4th				1660

Transfer Belt Bias Depending on Humidity Range (1C Mode: Face Side)

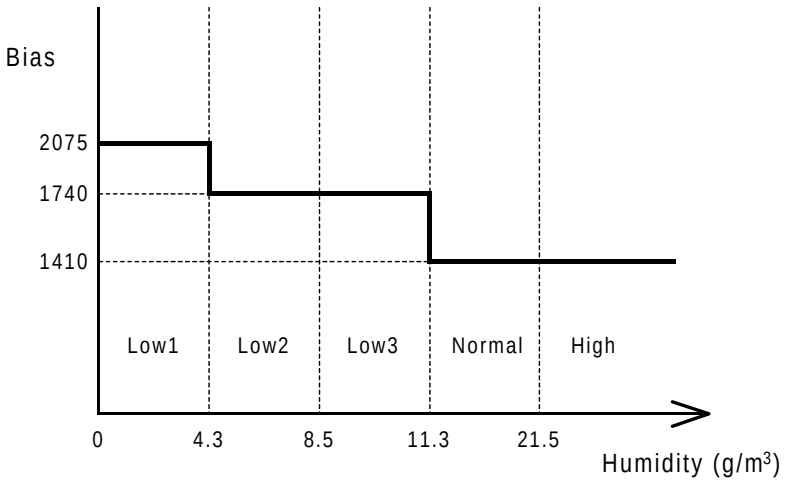

A172D514.wmf

This machine changes the transfer belt bias voltage for every mode and every copy cycle.

For 1C copy mode, which is more influenced by environmental conditions, the transfer belt bias output is divided into five ranges by four threshold values (as mentioned in the table above) and is determined by the output of the humidity sensor. Only three different bias settings are present as the factory setting for each environment.

The transfer belt bias voltage data can be monitored in the SP Adjustment Mode P-5 and 6. These data should not be changed. For more details, see the SP Mode Section.

7.2 TRANSFER BELT LUBRICATION

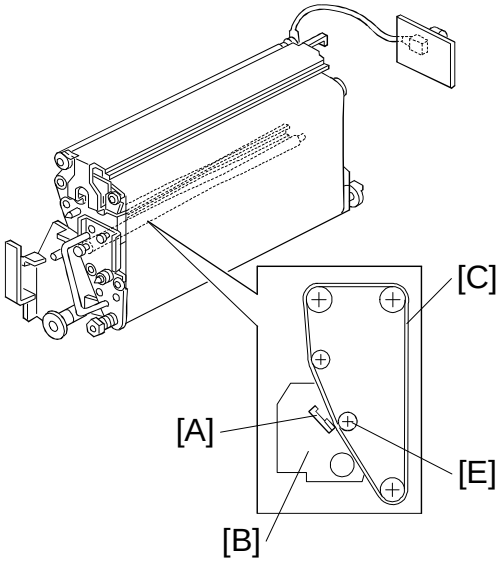

A172D515.wmf

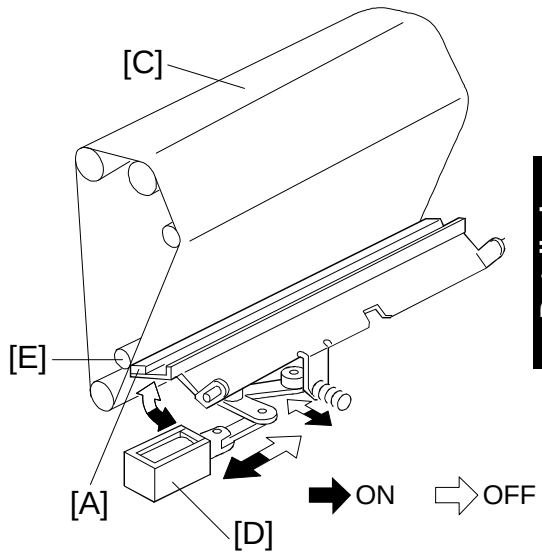

A172D516.wmf

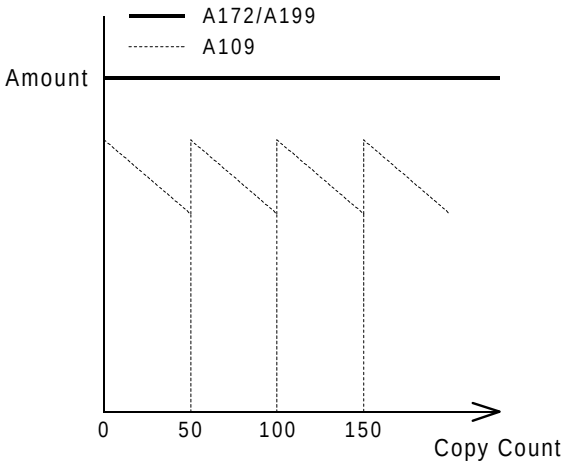

A172D517.wmf

The transfer belt lubricant bar [A] on the transfer belt cleaning unit [B] applies lubricant directly to the transfer belt [C] after every copy.

The on/off movement of the transfer belt lubricant bar solenoid [D] which is synchronized with the belt cleaning mechanism, pushes the lubricant bar against the support roller [E] in the transfer belt unit.

Compared with the previous model, the amount of lubricant applied to the transfer belt will stay at a constant level for every copy cycle. Because of this, copy quality problems such as partial blanking of lines (due to incomplete toner transfer) can be reduced.

8. TRANSFER ROLLER UNIT

8.1 TRANSFER BELT/ROLLER HEATER CONTROL

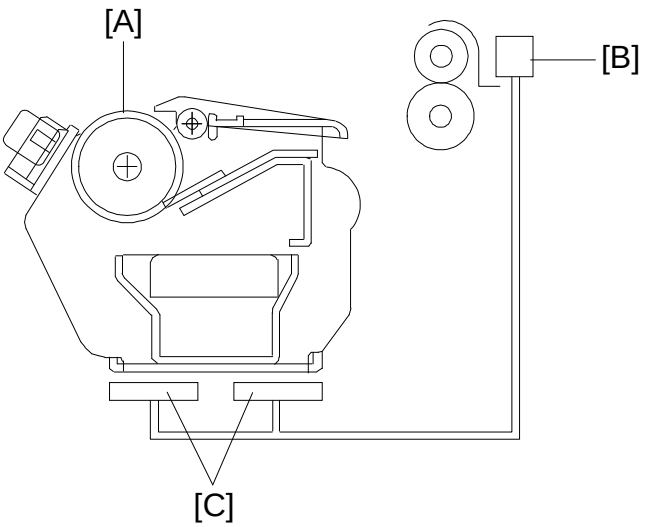

A172D518.wmf

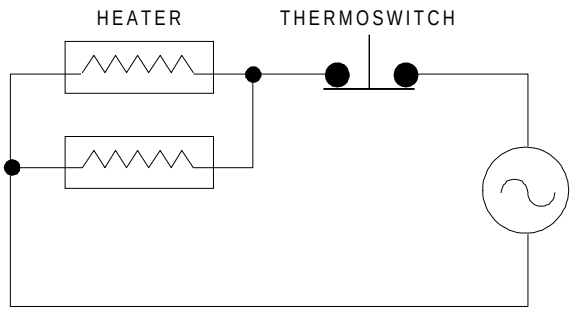

A172D519.wmf

The resistance of the transfer roller [A] changes with the environment. It is especially at low temperatures.

The transfer roller thermoswitch [B] detects the temperature around the transfer roller. To keep the resistance of the transfer roller at a constant level, when the detected temperature is 20°C or less, the transfer belt/roller heaters [C] turn on until the temperature rises above 20°C.

The heaters are not turned on/off by the main switch. The heaters operate whenever the copier power cord is plugged in.

8.2 TRANSFER ROLLER BIAS

<Transfer Roller Bias Coefficient by Humidity Range (1C Mode: Face Side; Normal Paper)>

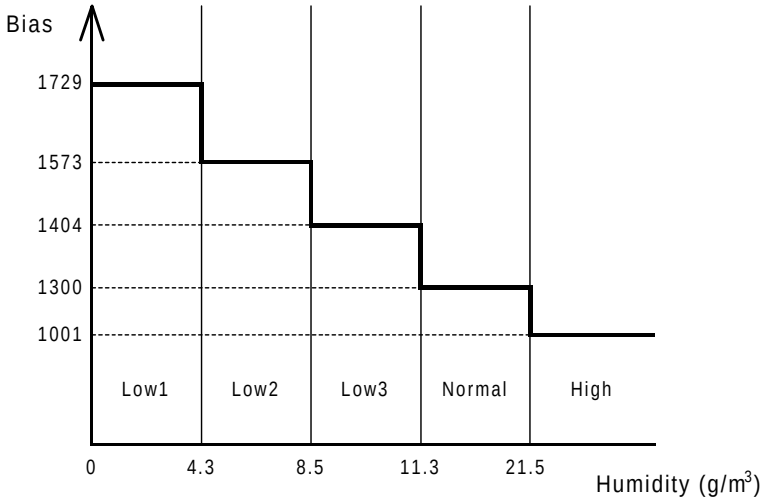

A172D520.wmf

Transfer Roller Bias (Normal Humidity)

		Paper Mode					
		Normal Paper	**Thick Paper**	**OHP: Sideways**	**OHP: Lengthwise**	**Normal: Back**	**Thick: Back**
Dev. Cycle	**1st**	1300	1200	2150	2150	1300	1450
	2nd	1600	1450	2200	2200	1800	1750
	3rd	1900	1750	2500	2500	2100	2050
	4th (Photo)	1600	1450	2200	2200	1800	1750
	4th (Letter)	1600	1450	2200	2200	1800	1750

The transfer roller bias is determined by the output of the humidity sensor. It is divided into five humidity ranges by four thresholds, to compensate for changes in the humidity of surrounding areas to maintain constant copy quality.

The threshold is divided more towards the low humidity side, resulting in more sensitivity at the low humidity end. This enables more accurate shift of the transfer bias with small changes in the environment.

Also, the transfer roller bias is changed for each copy mode and the kind of copy paper currently used.

NOTE: All values shown on this page are in volts D.C..
Values shown using SP Mode <1> SP Adjustment, page 7, are in a data format.

8.3 TRANSFER ROLLER LUBRICATION

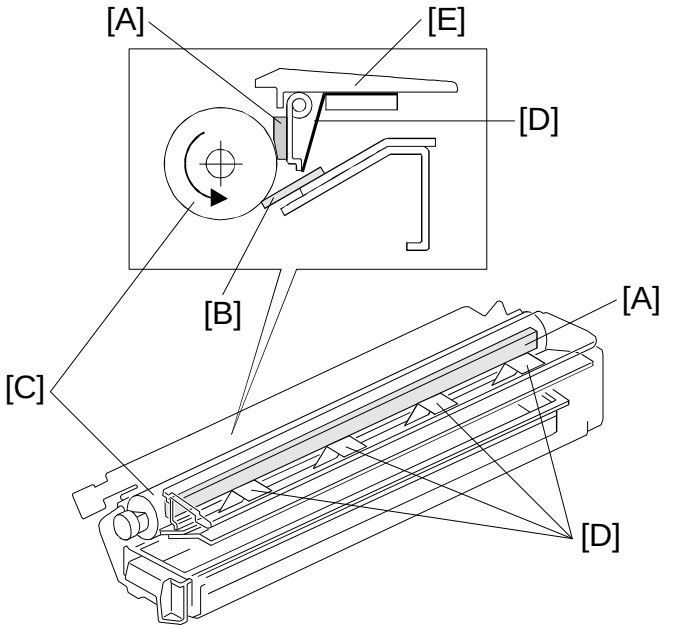

A172D539.wmf

The transfer roller lubricant bar [A] above the cleaning blade [B] continuously applies lubricant directly to the transfer roller [C].

Four spring plates [D] under the transfer roller guide [E] press the lubricant bar against the transfer roller.

By applying lubricant, the cleaning efficiency of the transfer roller cleaning blade is increased, which prevents the back side of copies from becoming dirty with toner and paper dust.

8.4 PAPER DISCHARGE

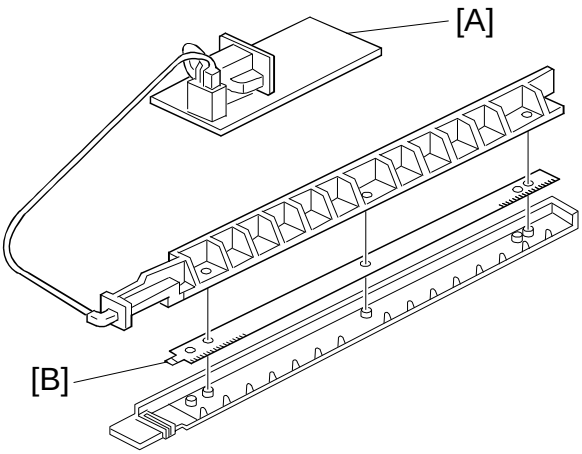

A172D521.wmf

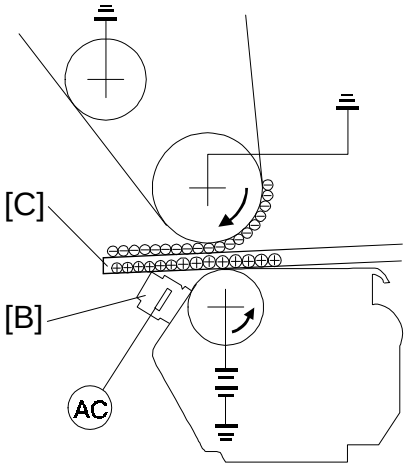

A172D522.wmf

Discharge Plate Output

Normal Paper	Thick Paper	Duplex: Face	Duplex: Back
4000 V	3500 V	4000 V	4000 V

The high voltage supply board -D [A] applies ac voltage to the discharge plate [B]. The discharge plate removes any charge remaining on the paper [C] to separate the paper from the transfer belt.

To perform an accurate discharge, the output of the discharge plate differs with the copy mode or paper being used. For OHP mode, discharge is not performed because the OHP sheet separates from the transfer belt as a result of its stiffness.

9. FUSING UNIT

9.1 ROLLER CLEANING MECHANISM

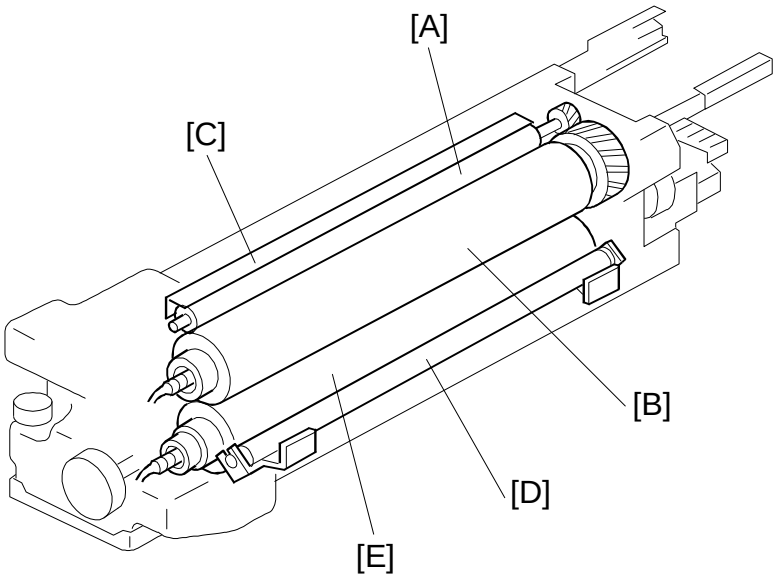

A172D523.wmf

The cleaning roller [A], which is always in contact with the hot roller [B], collects the toner and paper dust adhering to the surface of the hot roller. The collected matter is scraped off by a stainless steel blade [C].

The pressure roller cleaning roller [D], which is always in contact with the pressure roller [E], collects the toner and paper dust adhering to the surface of the pressure roller. The pressure roller cleaning roller is driven by physical contact with the pressure roller.

The pressure roller cleaning roller prevents poor copy quality in duplex mode (face side) and dirt on the back side of copies in normal mode. It also prevents horizontal lines from appearing on the back side when making OHP sheets.

9.2 FUSING TEMPERATURE CONTROL

Each rollers are controlled at the temperature shown in the table below.

	Stand-by	During Copying					
		Normal		OHP/Thick Paper		Manual Duplex (Back Side)	
		1C	2C, 3C, 4C	1C	2C, 3C, 4C	1C	2C, 3C, 4C
Hot Roller Temp.	180	160	170	170	170	Normal:160 Thick Paper: 170	Normal:170 Thick Paper: 170
Pressure Roller Temp.	120	Hot Roller Temp. - 20				120	120

10. OPERATION PANEL

This operation panel has an LCD (640 x 480 dots). Most of the keys for functions are displayed on the LCD (Touch panel).

There are two versions of the LCD.

- Basic Model (A199): Black/White LCD
- Edit Model (A172): Full Color LCD + Editor Function
  *The scanned image will be displayed on the LCD in full color (256 colors in total).

10.1 OPERATION PANEL CONTROL BLOCK DIAGRAM

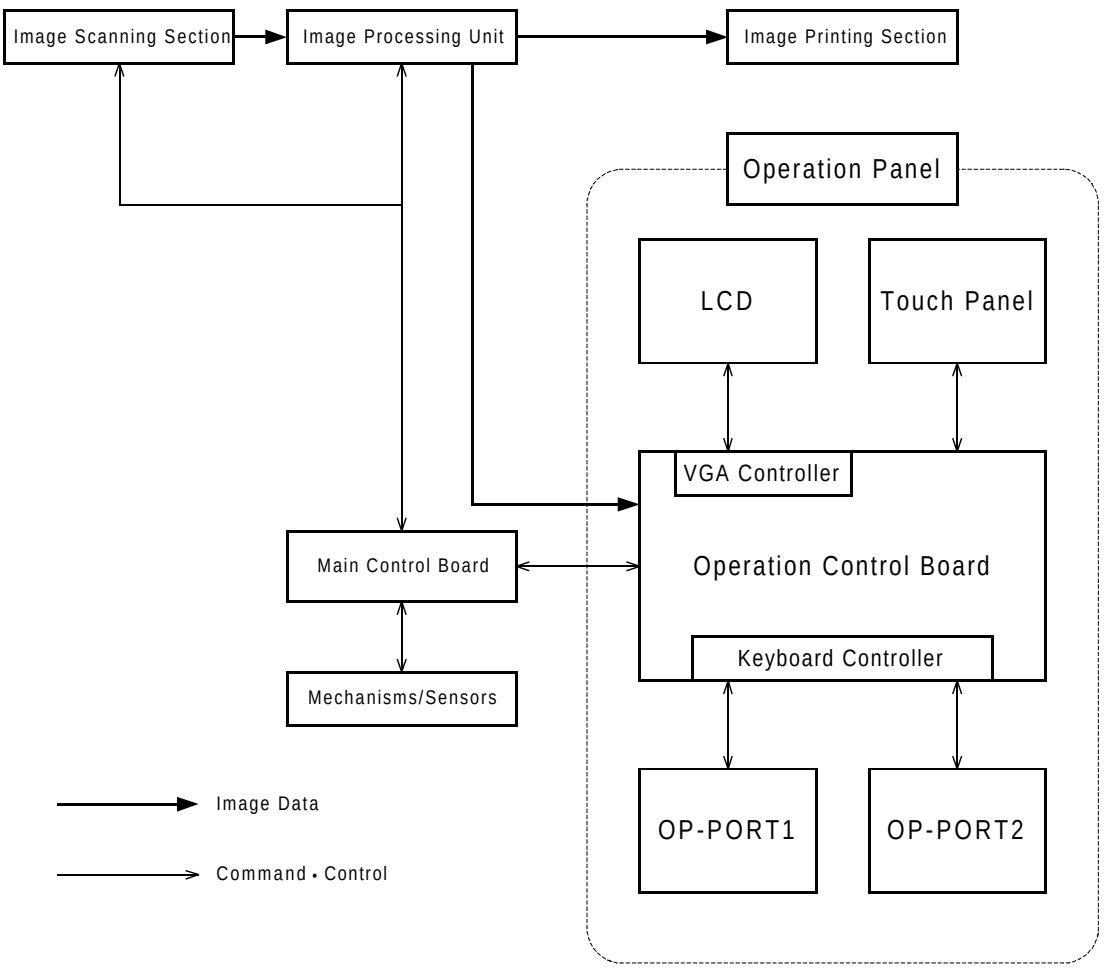

A172D536.wmf

10.2 OPERATION CONTROL BOARD

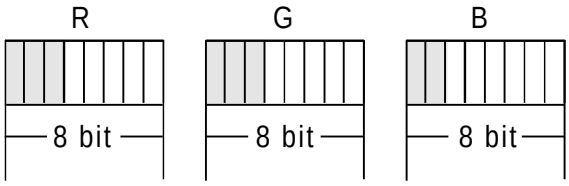

3 bit + 3 bit + 2 bit = 8 bit

A172D537.wmf

	Resolution	Enlargement Ratio
Full Size	25 dpi	100%
Enlarge 1	50 dpi	200%
Enlarge 2	67 dpi	264%
Enlarge 3	100 dpi	400%
Enlarge 4	132 dpi	528%

The Operation Control Board monitors the commands input by the user, and sends them to the Main Control Board. Also, the Operation Control Board controls the operation panel itself (Display Switching, and Display Control).

The data is sent as serial data through the optical fiber between the Operation Control Board and Main Control Board.

When in area editing mode, the Operation Control Board receives the area image data (RGB data: 8 bit) from the IPU and displays it in 256 colors on the large LCD.
As the Operation Control Board has a CPU, an Operation Panel Self-diagnostic Mode is available. (See Section 6, 3. Operation Panel Self-diagnostic Mode.)

10.3 OP-PORT

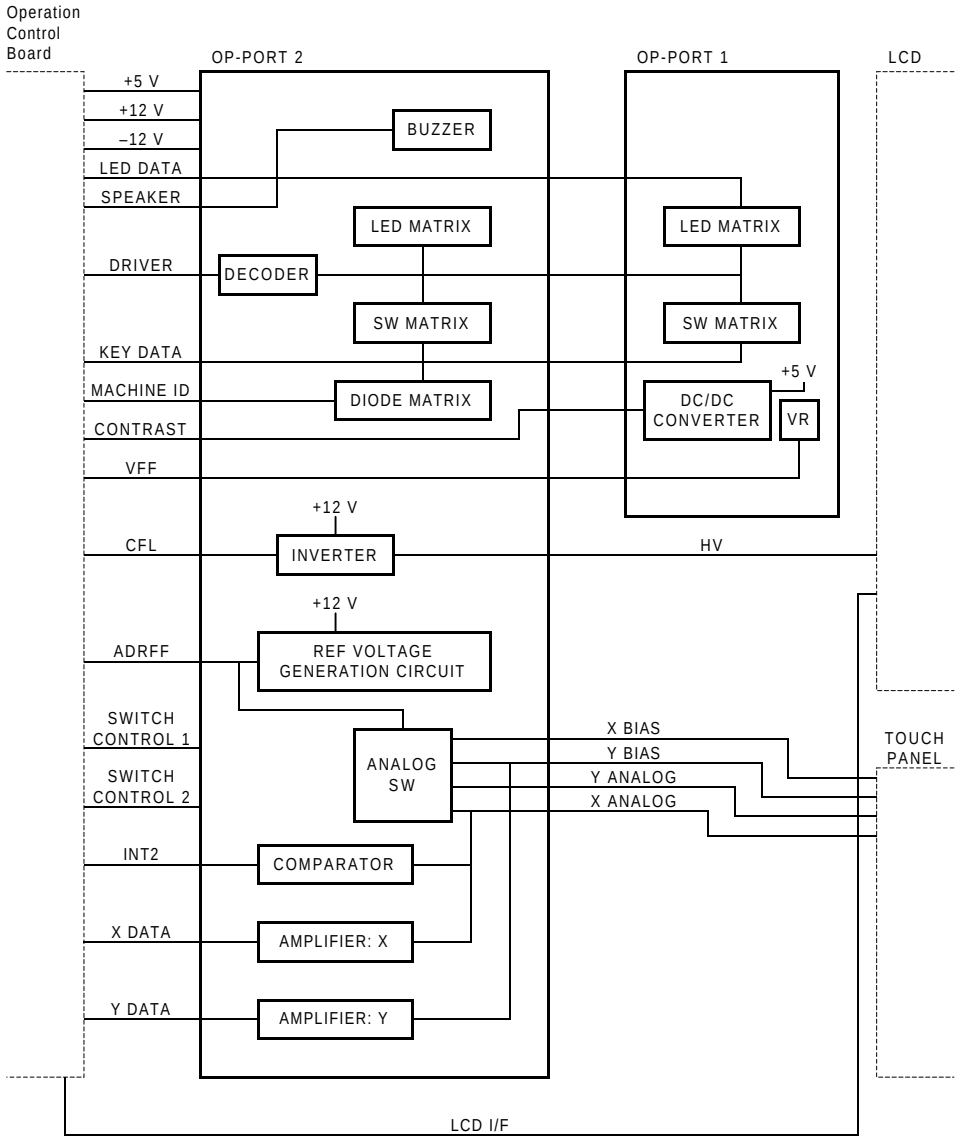

A172D538.wmf

The OP-PORT 1 & 2 control the following:

1. Switches and LED Buzzer
2. Touch detection and Touch Point detection
3. Power Supply to the LCD
4. Contrast Adjustment
5. CFL (Cold Fluorescent Lamp) Power Supply inverter function

SECTION 3

INSTALLATION

1. INSTALLATION REQUIREMENTS

1.1 ENVIRONMENT

1. Temperature Range: 10°C to 32°C (50°F to 89°F)
2. Humidity Range: 15% to 90% RH
3. Ambient Illumination: Less than 2,000 lux (Do not expose to direct sunlight.)
4. Ventilation: Minimum space 20 m^3.
   Room air should turn over at least 30 m^3/hr/person
5. Ambient Dust: Less than 0.15 mg/m^3 (4 x 10^{-6}, 4 x 10^{-6}, Oz/yd^3)
6. If the place of installation is air-conditioned or heated, do not place the machine
   a) where it will be subjected to sudden temperature changes,
   b) where it will be directly exposed to cool air from an air conditioner,
   c) where it will be directly exposed to heat from a heater.
7. Do not place the machine where it will be exposed to corrosive gasses.
8. Do not install the machine at any location over 2,000 m (6,500 feet) above sea level.
9. Place the copier on a strong and level base.
10. Do not place the machine where it may be subjected to strong vibrations.

1.2 MACHINE LEVEL

1. Front to back: Within 5 mm (0.2") of level
2. Right to left: Within 5 mm (0.2") of level

NOTE: The machine legs may be screwed up or down in order to level the machine. Set a carpenter's level on the exposure glass when you do this.

1.3 MINIMUM SPACE REQUIREMENTS

Place the copier near the power source, providing clearance as shown:

Copier only

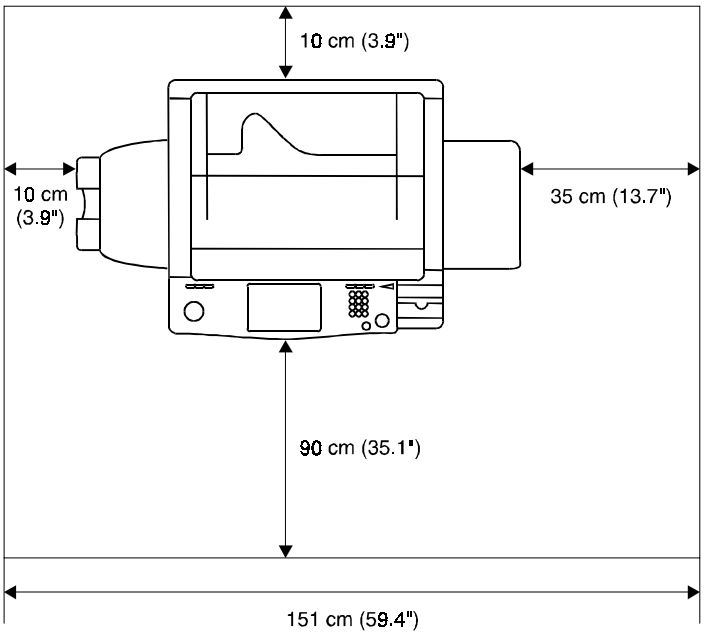

A172I505.wmf

Full system

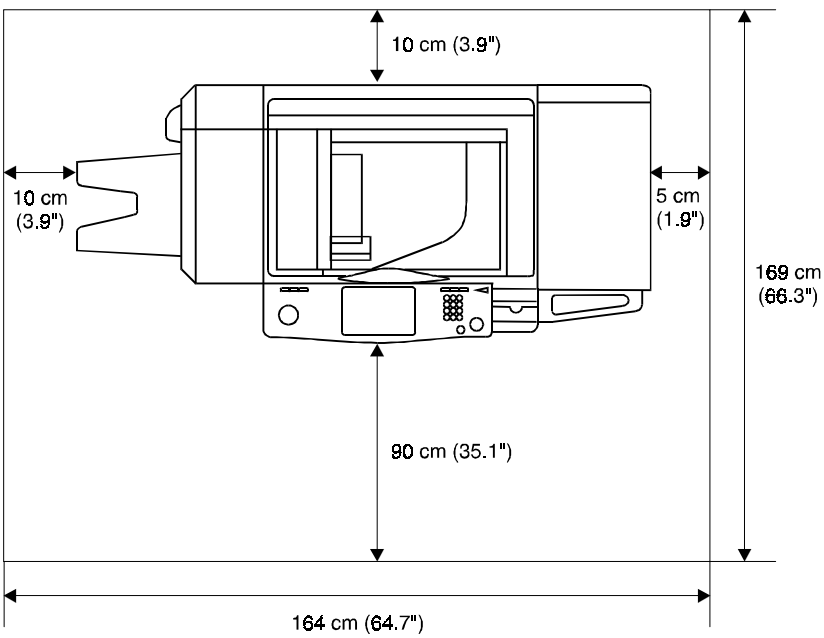

A172I506.wmf

NOTE: A space of at least 10 cm (3.9") at the rear of the machine is necessary for smooth air flow into the machine.

1.4 POWER REQUIREMENTS

1. Input voltage level: 115 V/60 Hz: More than 12 A
   220 ~ 240 V, 50/60 Hz: More than 7 A
2. Permissible voltage fluctuation: 10%
3. Do not set anything on the power cord.

NOTE: a) Make sure the plug is firmly inserted in the outlet.
b) Avoid multi-wiring.

2. COPIER (A172/A199)

2.1 ACCESSORY CHECK

Check the quality and condition of the accessories in the box against the following list:

2.1.1 Copier

1. Operating Instructions (except -27 machines)..... 1
2. NECR (-17, -27, and -29 machines only) 1
3. Editor Pen..... 1
4. Copy Tray..... 1
5. Operating Instructions Holder 1
6. Total Counter Resetting Tool..... 1
7. Leveling Shoe..... 4
8. Instructions Procedure Sheet 1
9. Philips Truss Head Screws M4 x 8..... 2
10. Caution Decal - 4 Languages (-22, -26, -27 only) 1

2.1.2 Optional Holder (A702-18)

1. Base Bracket 1
2. Holder Cover 1
3. Front Cover..... 1
4. Lower Cover 1
5. Philips Pan Head Screws M4 X 6..... 8
6. Philips Truss Head Screws M4 X 8 3

2.2 COPIER SEPARATION

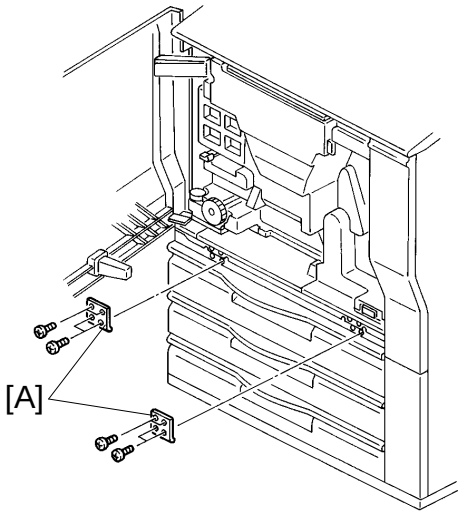

A172I509.img

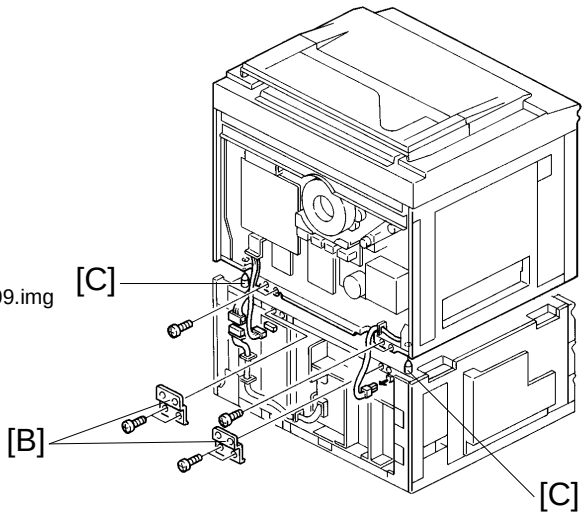

A172I510.img

The machine can be separated into two units (the main frame and the paper supply unit). Separation of the machine will help the transportation to the customer's site.

1. Open the front door and remove the front securing brackets [A] (4 screws each).
2. Remove both upper and lower rear covers (4 screws each).
3. Remove the rear securing brackets [B] (4 screws each).
4. Disconnect the connectors running between both units, and free them from the harness clamps.
5. Lift up the machine by using the handles.

NOTE: a) When lifting the machine, lift straight up.

b) Positioning pins [C] are located at the rear. When attaching, make sure to clear the harnesses out of the way.

2.3 COPIER INSTALLATION PROCEDURE

NOTE: Since the installation procedure is not packed with the copier as an accessory, always bring this manual with you.

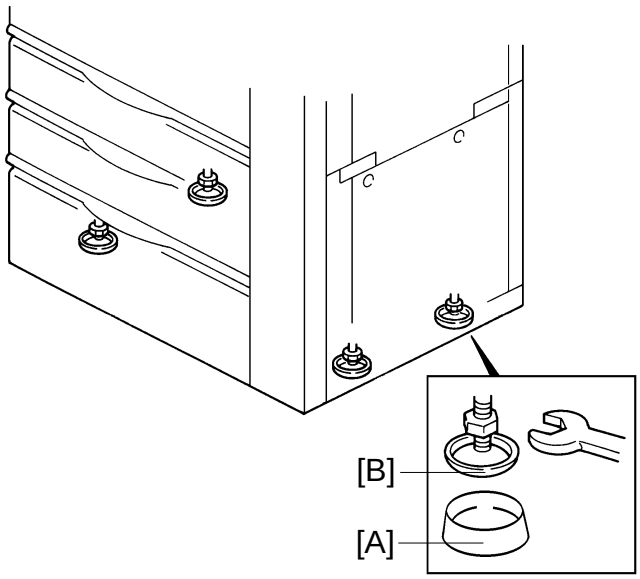

A172I511.img

NOTE: a) Before performing the following installation procedure, be sure to plug in the copier power cord due to the change of material of the transfer roller. However, don't switch on yet.
For detailed information about the new roller, see the Detailed Description section.

b) Insert the leveling shoes [A] under the leveling feet [B], and level the machine if necessary. (The leveling feet can be screwed up or down.)

c) Keep the factory setting data sheet under the operation panel for future use. We recommend making a copy to be kept at your office also.

d) Before removing the drum protective sheet, always remove all the development units out of the copier.

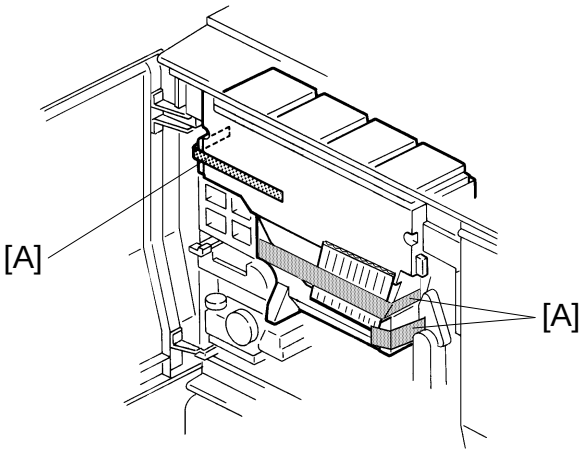

A172I512.img

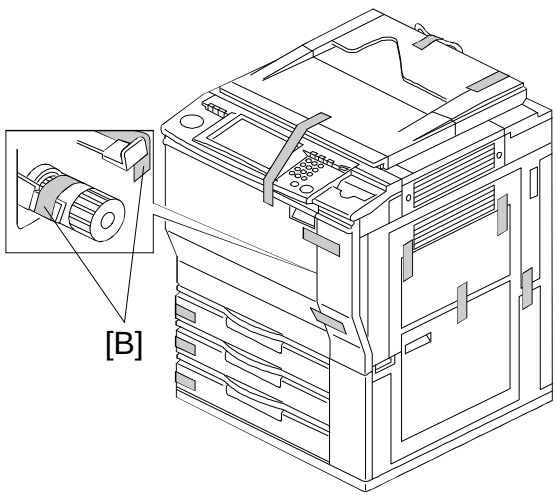

A172I500.wmf

1. Remove the tape strips.
2. Open the front doors then remove the tape strips [A] around the toner tank and the tapes [B] securing the registration guide plates (knobs B1 and B3).

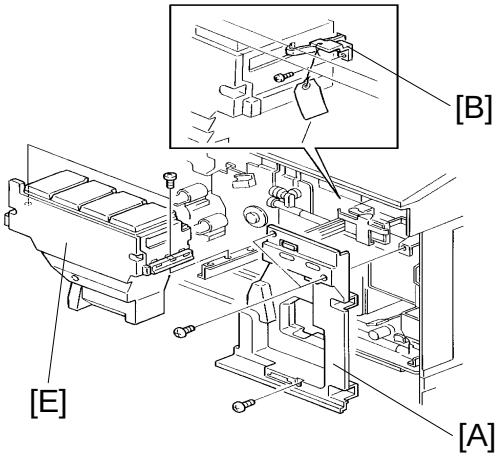

A172I513.img

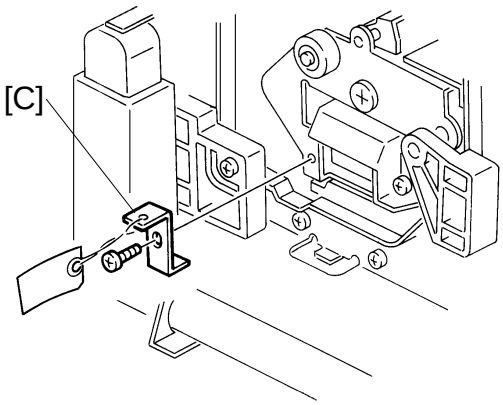

A172I514.img

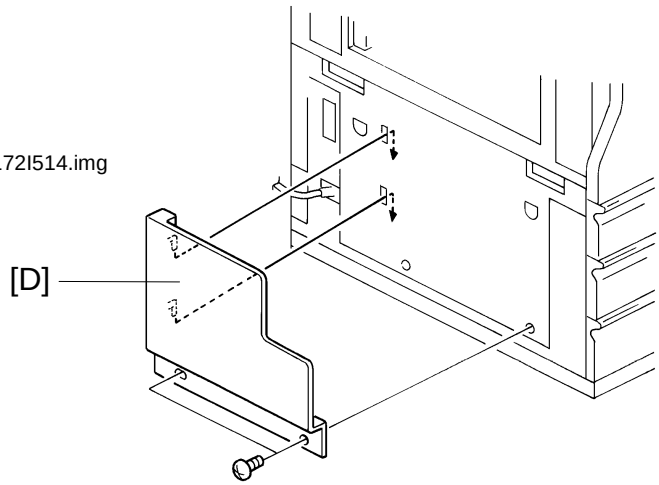

A172I515.img

3. Remove the right inner cover [A] (3 screws) and the bracket [B] securing the toner tank to the front side plate (1 screw).
4. Remove the bracket [C] securing the transfer roller unit (1 screw).
5. Install the operating instruction holder [D] (2 truss screws [M4 x 8]).
6. Push and slide out the toner tank [E]. Then remove the toner tank (2 screws).

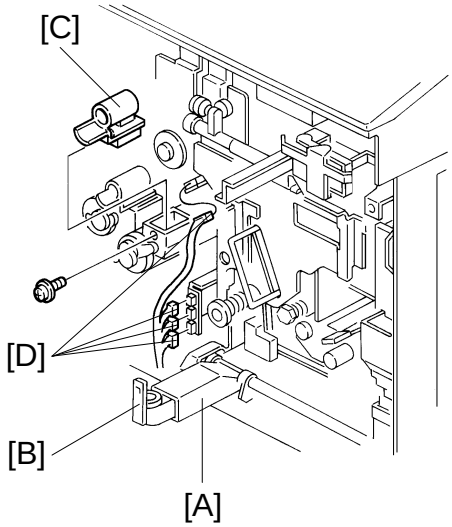

A172I504.img

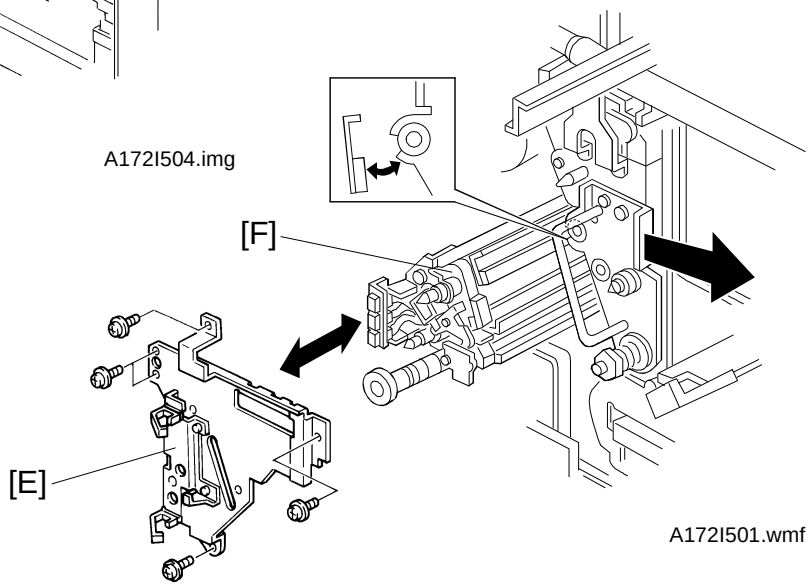

A172I501.wmf

A172I503.img

7. Lower the toner collection duct [A] (1 hook [B]).
8. Remove the yellow toner supply receptacle [C] (1 screw).
9. Disconnect the four connectors [D] and free them from the three harness clamps.
10. Remove the transfer belt stay [E] (5 screws).
11. Pull out and remove the transfer belt cleaning unit [F].

NOTE: To prevent the lubricant bar from being scratched, pull the handle of the transfer belt unit slightly to the right while you pull the transfer belt cleaning unit out.

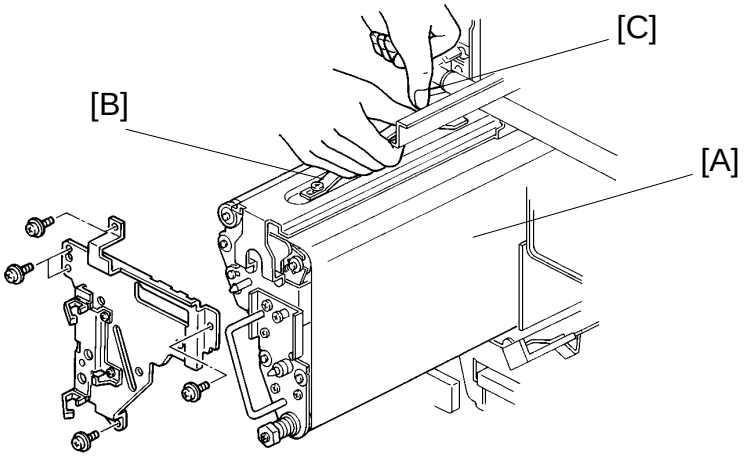

A172I516.img

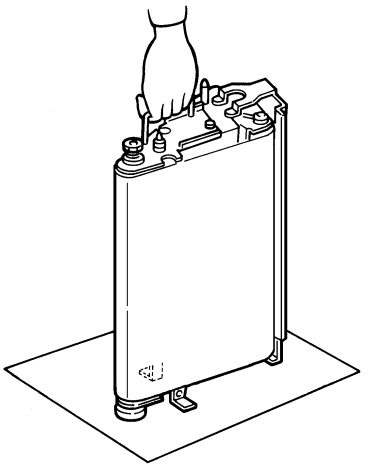

A172I517.img

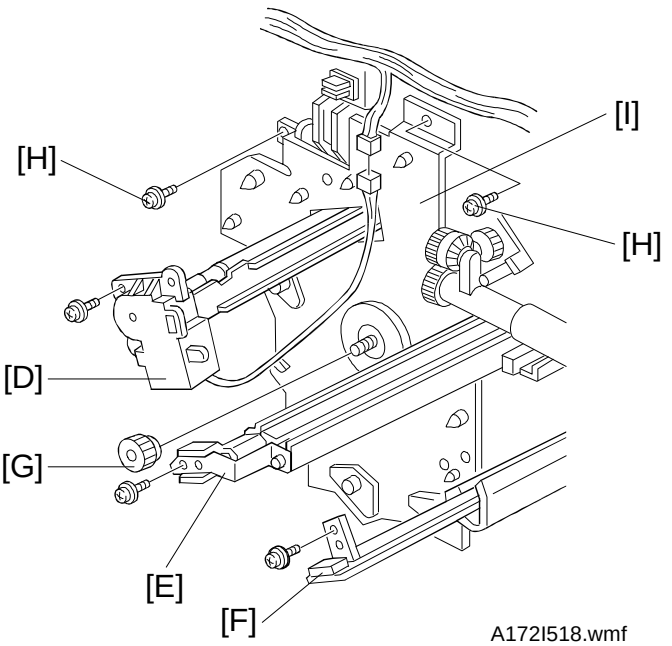

A172I518.wmf

12. Carefully pull and remove the transfer belt unit [A]. (While holding the handle [B], release the lever [C])

    NOTE: There are stands at the rear side of the transfer belt unit. After pulling out the unit out of the machine, stand the transfer belt unit as shown.
    Do not touch the transfer belt surface with bare hands.

13. Remove the charge corona unit [D] (1 screw, 1 connector), PCC [E] (1 screw) and ID sensor board [F] (1 screw).

14. Remove the knob [G] and the two screws [H] and pull out all the development units slightly (2 ~ 3 cm) then remove the drum stay [I].

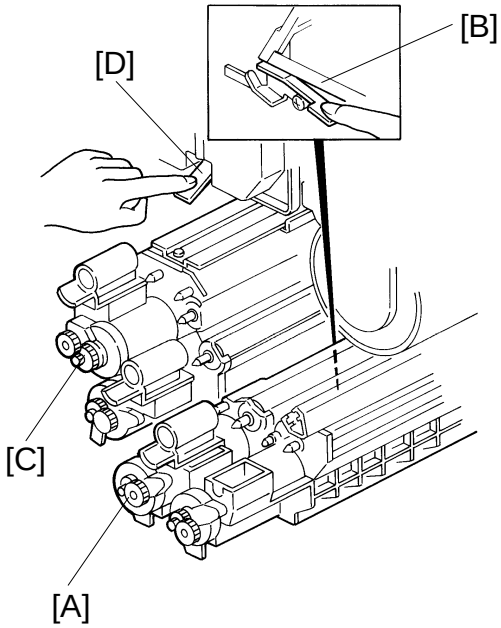

A172I519.img

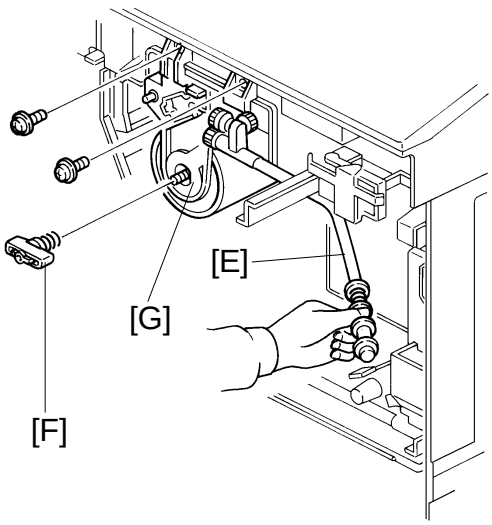

A172I520.img

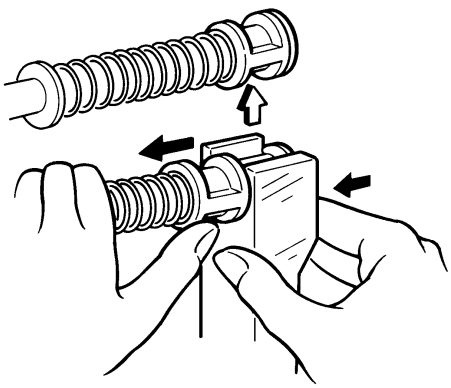

A172I521.img

15. Remove the magenta/yellow development unit [A] (1 release lever [B]) and remove the black/cyan development unit [C] (1 release lever [D]).
16. Disconnect the drum's toner collection pipe [E] as shown.
17. Remove the knob screw [F] (counterclockwise) and pull out the quenching lamp.
18. Remove the drum unit [G] (2 screws).

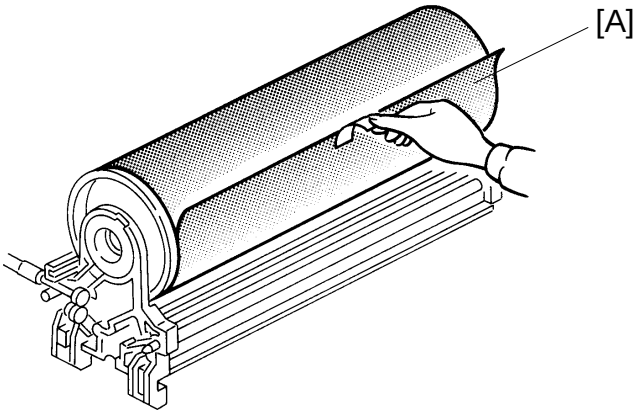

A172I522.img

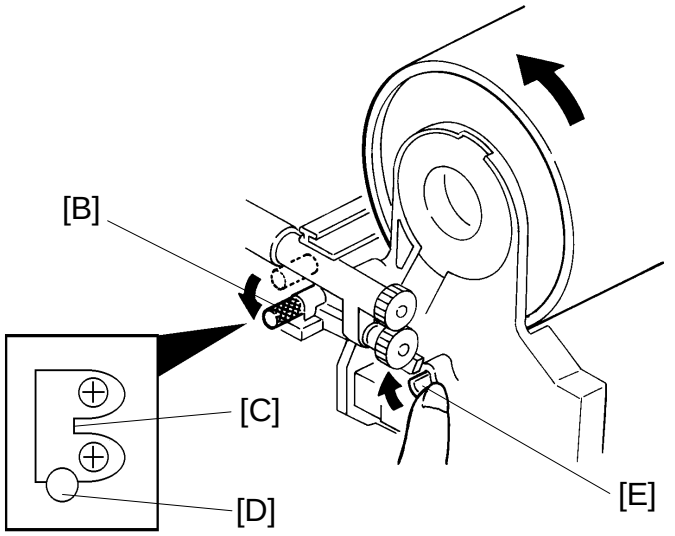

A172I523.img

19. Turn the drum unit over.

    NOTE: Let the unit rest on it's casing.

20. Remove the drum protective sheet [A].

21. Loosen then move the knob [B]. (Move the knob from [C] to [D].)

    - [C] position = No pressure applied
    - [D] position = Pressure being applied

22. Tighten the knob [B] at the lower position [D].

23. While pressing up the latch [E] to apply the cleaning blade pressure, rotate the drum counterclockwise 3 times to ensure that setting powder is evenly applied, as shown.

    NOTE: Hold only the edge of the drum to rotate it (within 1 cm from the end).

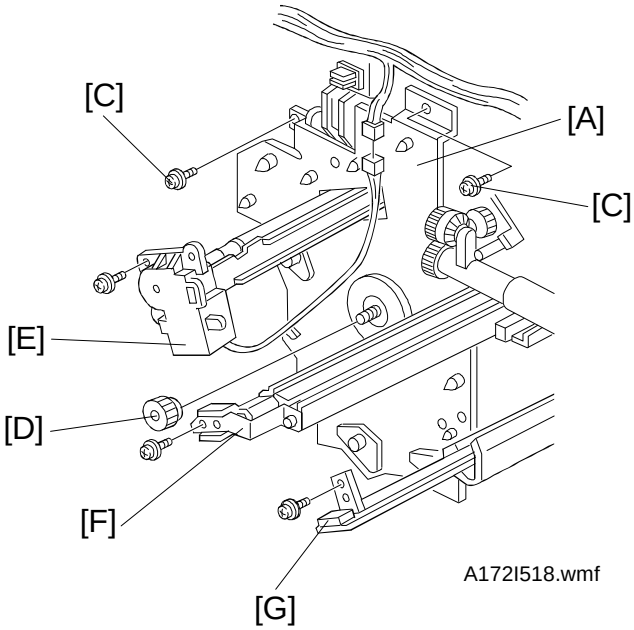

A172I518.wmf

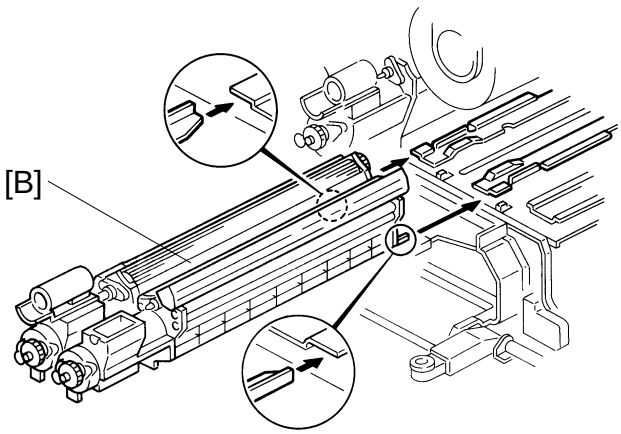

A172I524.img

24. Reinstall the following units or parts in the machine as follows.
    1) Slide in the drum unit and secure it to the shaft with the knob screw.
    2) Set the drum stay [A] in position and secure the drum unit (2 screws).
    3) Remove the drum stay [A] and reinstall the quenching lamp, toner collection tube and development units.
       NOTE: When reinstalling the magenta/yellow development unit [B], make sure that the bottom plate fits the rails as shown.
    4) Set the drum stay by securing the 2 screws [C] then the knob [D].
    5) Reinstall the charge corona unit [E] (1 screw, 1 connector), PCC [F] (1 screw), and the ID sensor board [G] (1 screw).

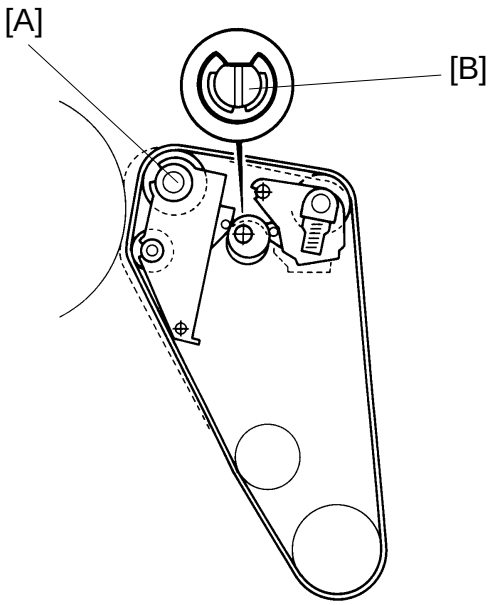

A172I525.img

25. Confirm the belt bias roller [A] is in the release position (innermost position) as shown. If not, turn the shaft [B] with a flat head screwdriver until the belt bias roller comes to the release position.

    NOTE: If the belt bias roller is not in the release position, it will touch the drum and damage it.

26. Re-install the following units or parts in the following order.
    1) Transfer belt unit.
    2) Transfer belt cleaning unit
       NOTE: To prevent the lubricant bar from being scratched, pull the handle of the transfer belt unit slightly to the right while you re-install the transfer belt cleaning unit.
    3) Transfer belt stay (5 screws)
    4) Four connectors (6P white, 3P red, 3P white, 3P blue)
       NOTE: The 2P white connector is not used.
    5) Toner collection duct (1 hook)

⚠ CAUTION

1. Be careful when handling the fusing unit. It is hot.

2. Take care not to spill silicone oil on the floor. If silicone oil spills on the floor, immediately clean it with a silicone oil remover. Silicone oil is very slippery and can cause someone to fall.

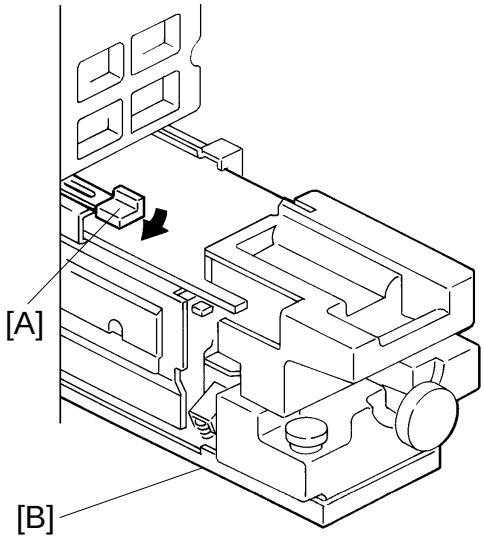

A172I526.img

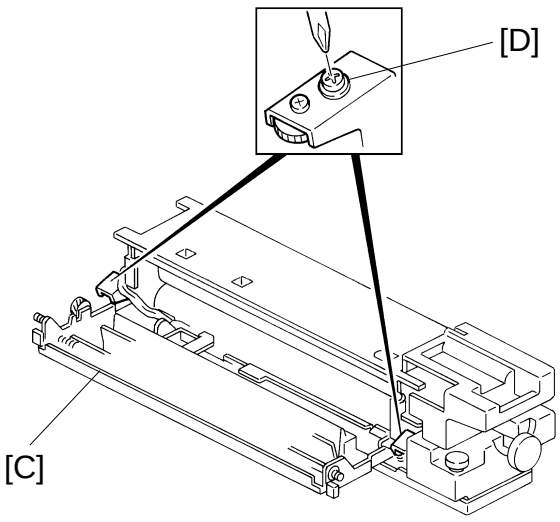

A172I527.img

27. While releasing the lever [A], pull out the fusing unit [B].

28. Open the exit unit [C] (2 "D4" release levers).

29. Loosen the 2 black screws [D] until they moves freely so that the fusing pressure is being applied.

    NOTE: Do not turn the pressure adjustment screws which are located just beside the screws [D].

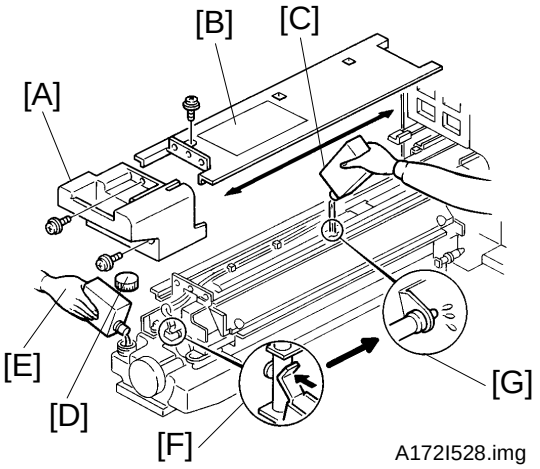

A172I528.img

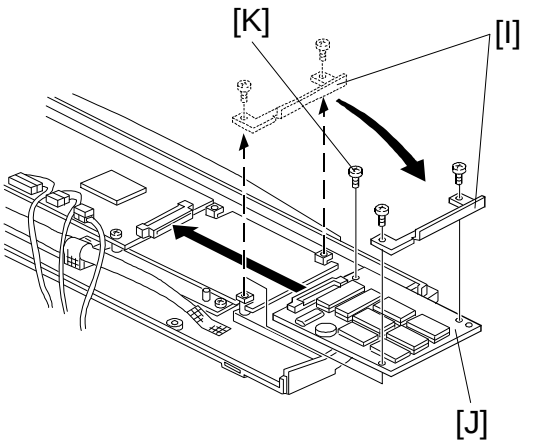

A172I507.wmf

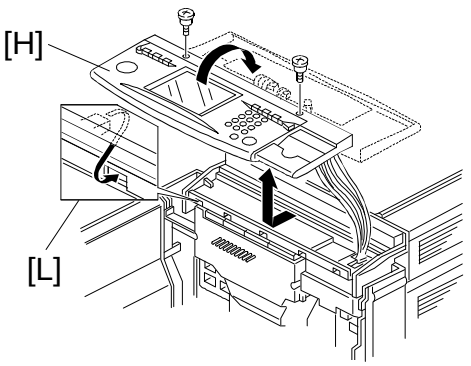

A172I508.wmf

30. Remove the fusing handle cover [A] (2 screws) and the fusing top cover [B] (1 screw).

31. Prime the oil supply pad with silicone oil [C].

32. Remove the oil cap [D] and fill the tank with silicone oil to its max level [E].

33. Manually operate the oil pump lever [F] and confirm the proper operation of the silicon oil supply system [G].

34. Reset the covers, the exit unit, oil cap and the fusing unit.

35. For **-26 and -27** machines, perform the following language ROM installation procedures. For **-22** machines, perform if replacement to a language other than English is needed.
    1) Detach the operation panel [H] (2 screws). (Do not remove any connectors.) Gently place it face down on the platen cover.
    2) Remove the securing bracket [I] (2 screws).
    3) Install the requested language rom board [J] using the securing bracket and the accessory screw [K] as shown.
    4) Reinstall the operation panel, making sure that the panel is properly hooked in [L].

36. Locate the switch actuator [A] inside the right door and actuate the front safety switch.

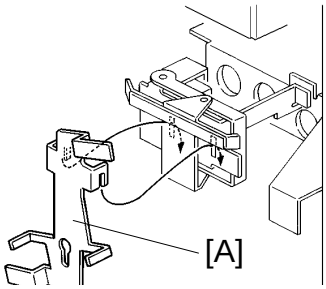

A172I529.img

37. Plug in the power cord and turn on the main switch.

38. Enter SP mode as follows.
    1) Press the clear modes key.
    2) Wait for 2 or 3 seconds while the display returns to the initial screen.
    3) Enter "107" with the number keys.
    4) Hold down the clear/stop key for more than 3 seconds.

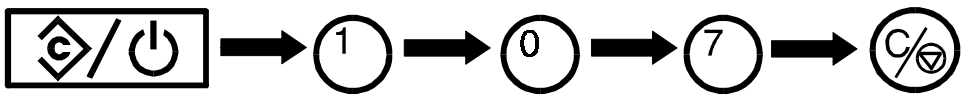

39. Touch the SP Test Mode key [B].

    NOTE: Make sure to use the editor pen when touching the touch panel display.



40. Touch the Next key [C] to open page 4.

    NOTE: Wait until the development unit drive stops, then start step 41.



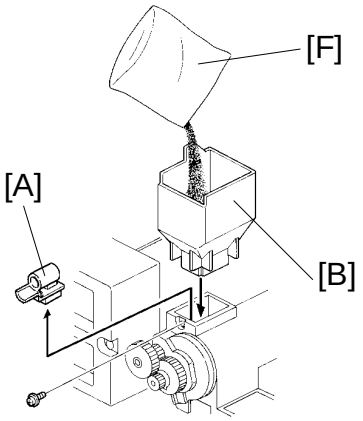

A172I530.img

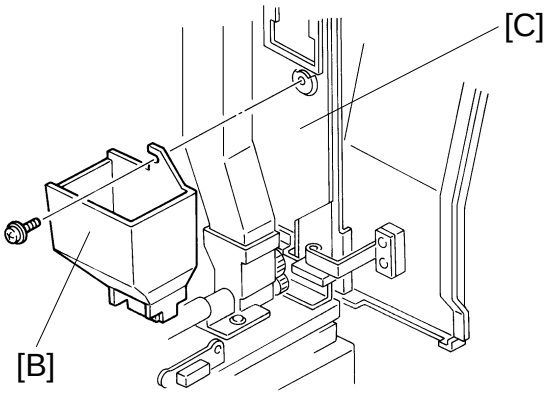

A172I531.img

41. Remove the black toner supply receptacle [A] (1 screw).

    NOTE: Refer to the toner tank lid for the color of the development unit.

42. Remove the developer supply funnel [B] from the bracket [C] and clean the inner surface.

43. Set the developer supply funnel on the black development section as shown.

44. Touch the key [D], to enter the output mode.

45. Enter "68" with the number keys, then touch the key [D] again to select test mode #68 "black development drive motor ON".

46. Touch the Start key [E].

47. Shake a pack of black developer [F] 20 times then pour it in.

48. 1 minute after pouring the developer, touch the stop key [G].

    NOTE: Do not touch the stop key within 1 minute, otherwise, the developer will not be distributed evenly in the development unit.

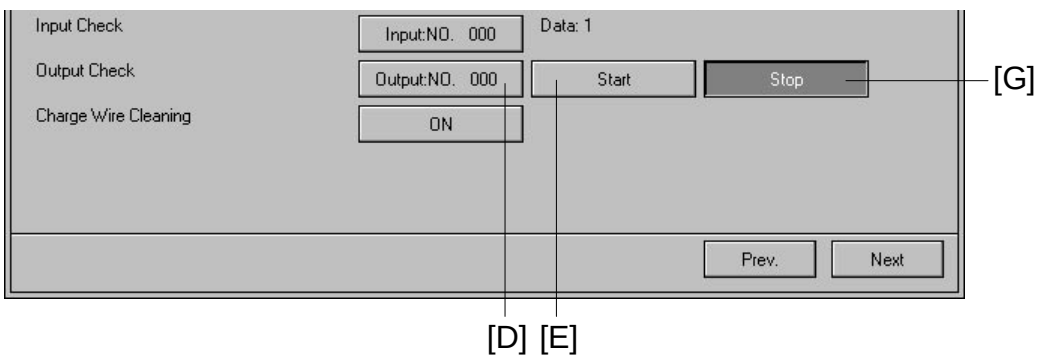

49. Remove the developer supply funnel, then install the toner supply receptacle.

50. Install the cyan, magenta and yellow developer in the same manner as black developer installation (step #40 to #49).

    NOTE: To select the "color development drive motor ON" mode, enter "69" for color instead of 68 for black (refer to step #45).

51. Return the developer supply funnel to the original position.

52. Touch the Previous key [A] to open page 3.

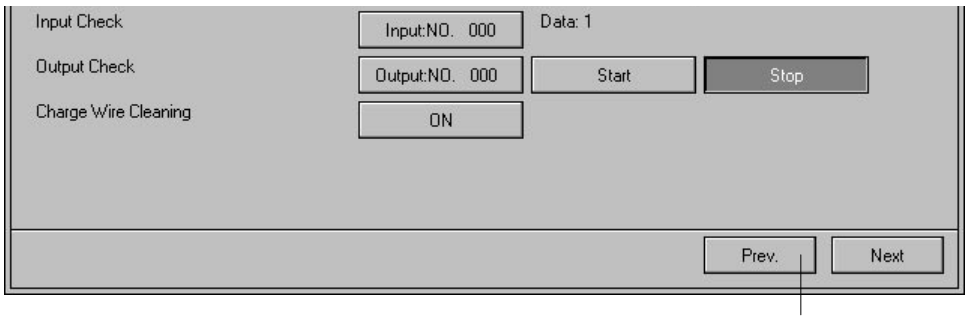

[A]

53. Perform developer initial setting as follows.
    1) Confirm that the main charge corona, PCC, ID sensor boards are set correctly (1 screw each).
    2) Confirm that the toner tank is not installed.

    NOTE: If the toner tank is installed, toner is supplied during developer initial setting and the machine cannot figure out the proper toner concentration of the new developer.

    3) Touch the All Start key [B] to start the developer initial setting. After the adjustment is completed, the machine stops automatically.

54. Touch the Index key [C].

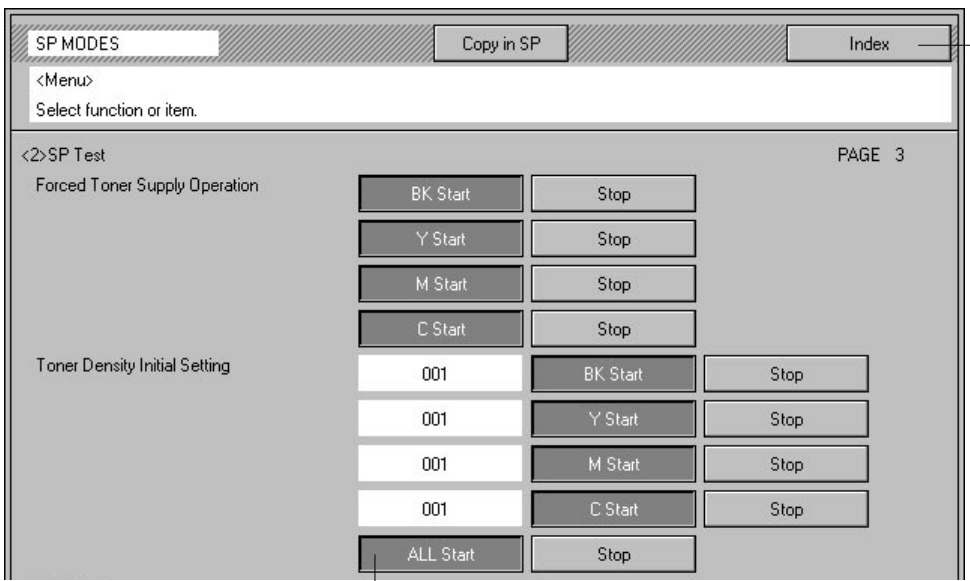

[C]

[B]

55. Touch the SP Data Output key [A].

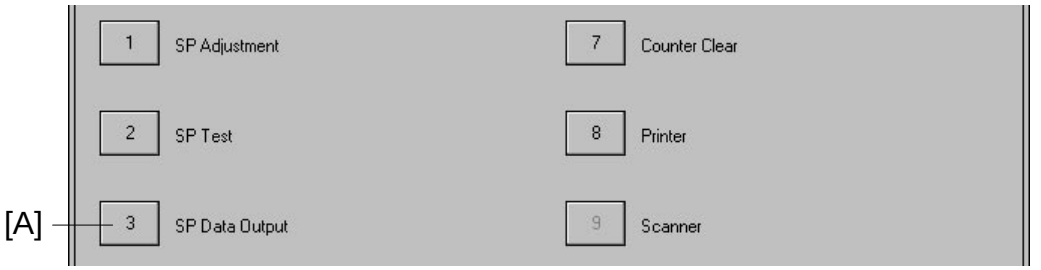

56. Check whether VT has the same values as VREF for all colors (Bk, Y, M, C). If not, touch the Index key [B] then return to the test mode page 3 to perform developer initial setting (step 53) again.

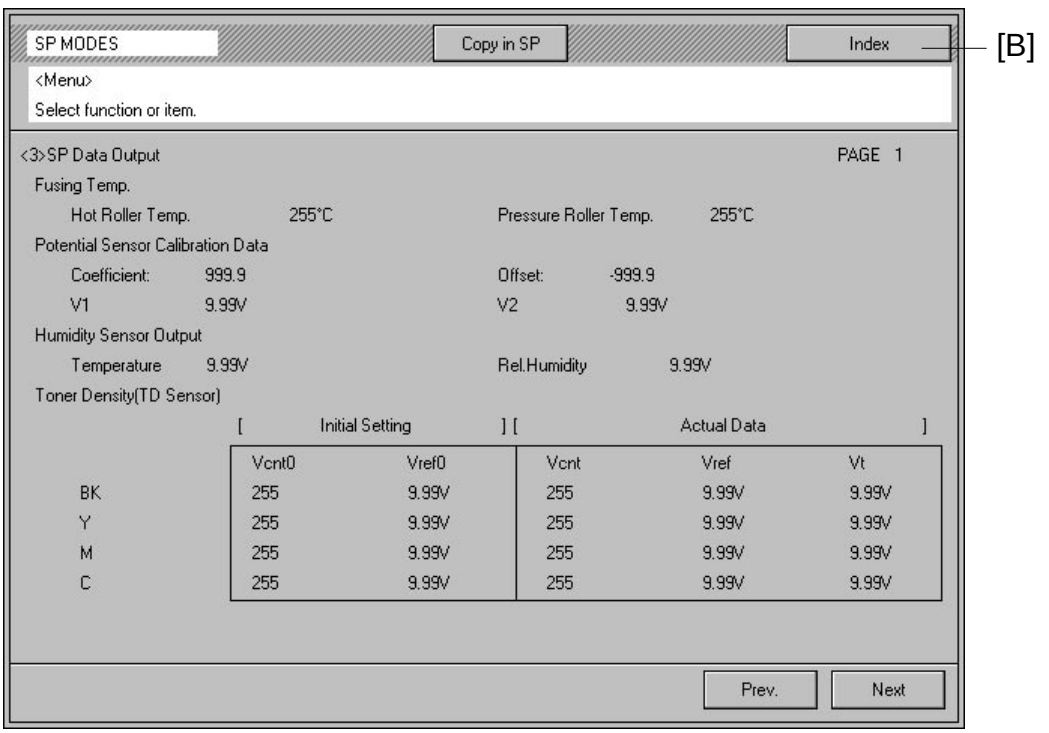

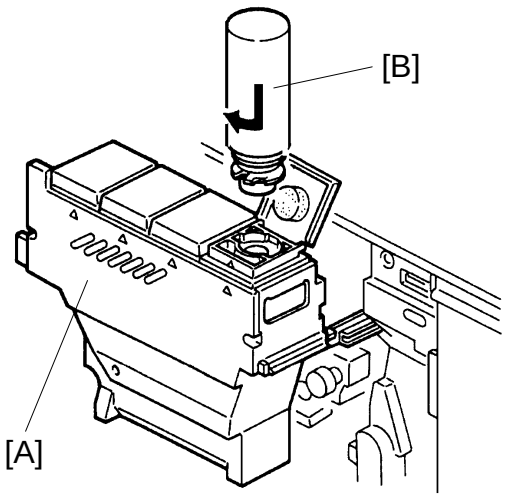

A172I532.img

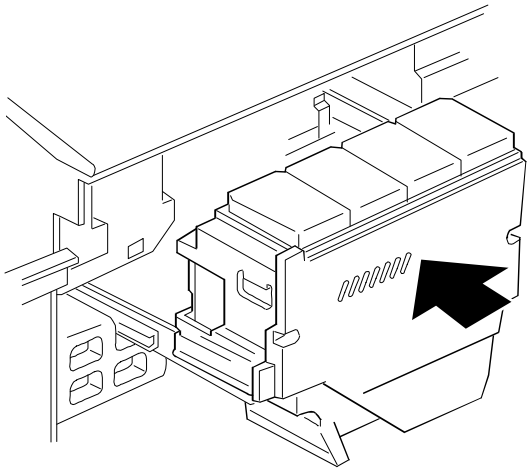

A172I502.wmf

57. Put the toner tank [A] on the Accuride rails (2 screws).
58. Add toner [B] for all colors.

    NOTE: • Read the instructions on the box for how to add toner.

    • Before reinstalling the toner tank, wait at least 30 seconds to let the toner settle.

59. Slowly push the toner tank [A] in.
60. Close the front doors and install the copy tray.
61. Load A3 or 11" x 17" paper in the 3rd paper tray.
62. Place a C-4 test chart on the exposure glass.
63. Touch the Copy In SP key [C] and make 20 full color copies using A3 or 11" x 17" size paper. (40 full color copies using A4 or 11" x 8 1/2" is also acceptable.)

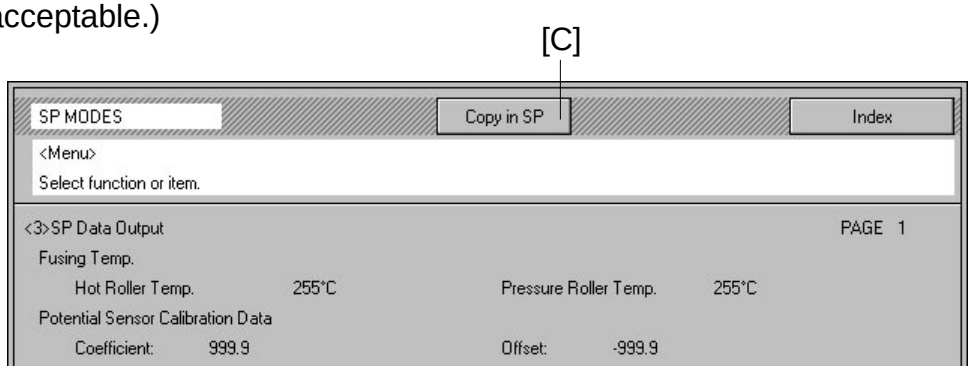

64. **Wait 5 minutes** to ensure that no residual voltage remains on the drum.

    NOTE: The process control self check (step 67) must be performed when there is no residual voltage on the drum.

65. Touch the SP Mode key [A] to enter the SP mode.

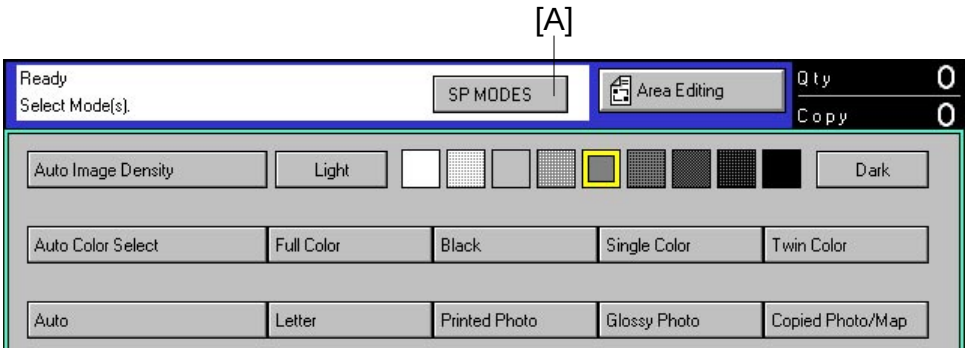

66. Touch the Index key.

67. Touch the SP Special Feature key [B].



68. Confirm that the PID key [C] is selected for the Process Control Mode Selection. If not, touch the PID key [C].

69. Touch the Index key [D].

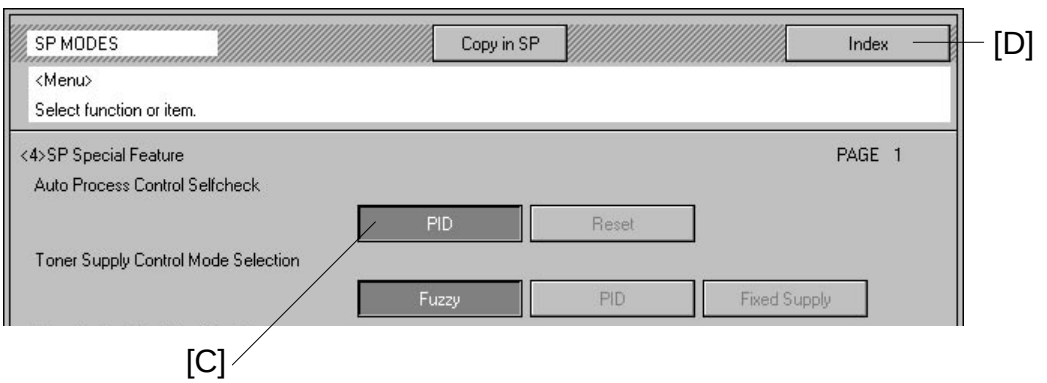

70. Touch the SP Test Mode key [A].

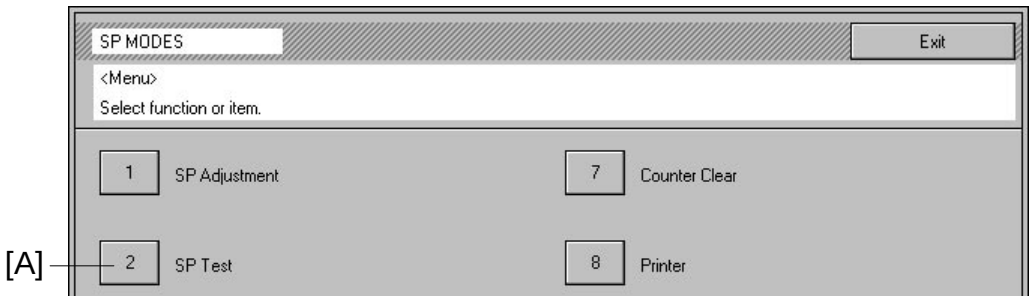

71. Touch the Next key [B] to open page 4.



72. Touch the Process Control Self Check Start key [C]. After the self check is completed, the machine stops automatically.

⚠ CAUTION

While process control is taking place, do not touch the knob, drum stay, or drum shaft. These parts and the fly wheel carry a high electrical voltage during process control.

73. Touch the Index key [D].

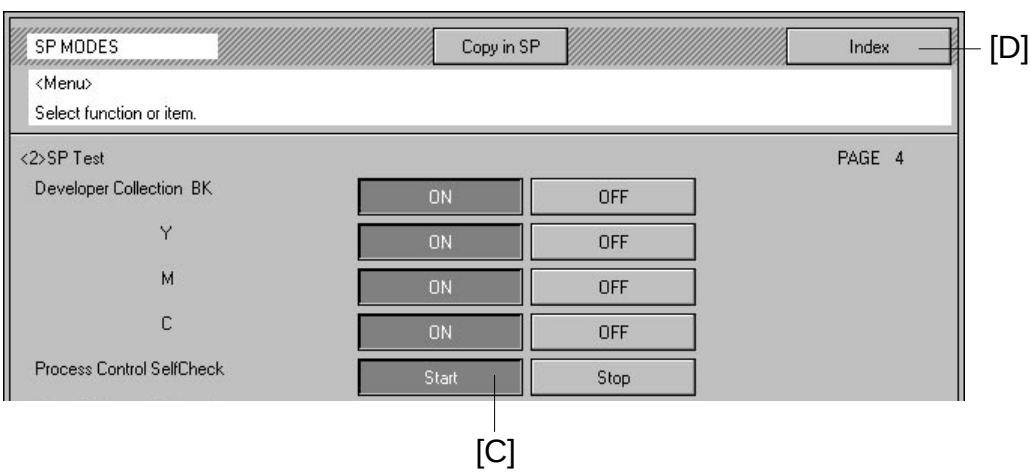

74. Touch the SP Data Output key [A].

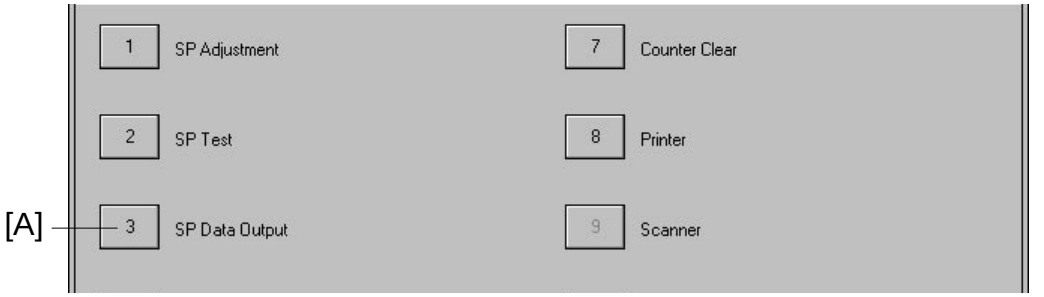

75. Touch the Next key [B] and open page 3.

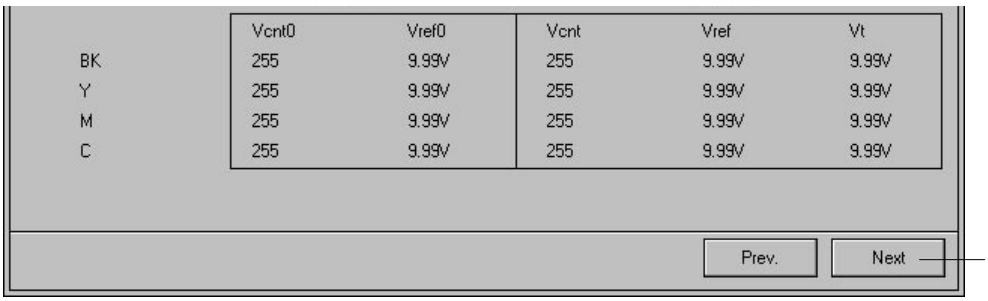

76. Check the V_D and V_L [C] for each color. If the difference between 'Target' and 'Actual' for any color exceeds 5, wait 5 minutes and go back to step 72 and perform the process control self check again.

77. Touch the Index key [D].

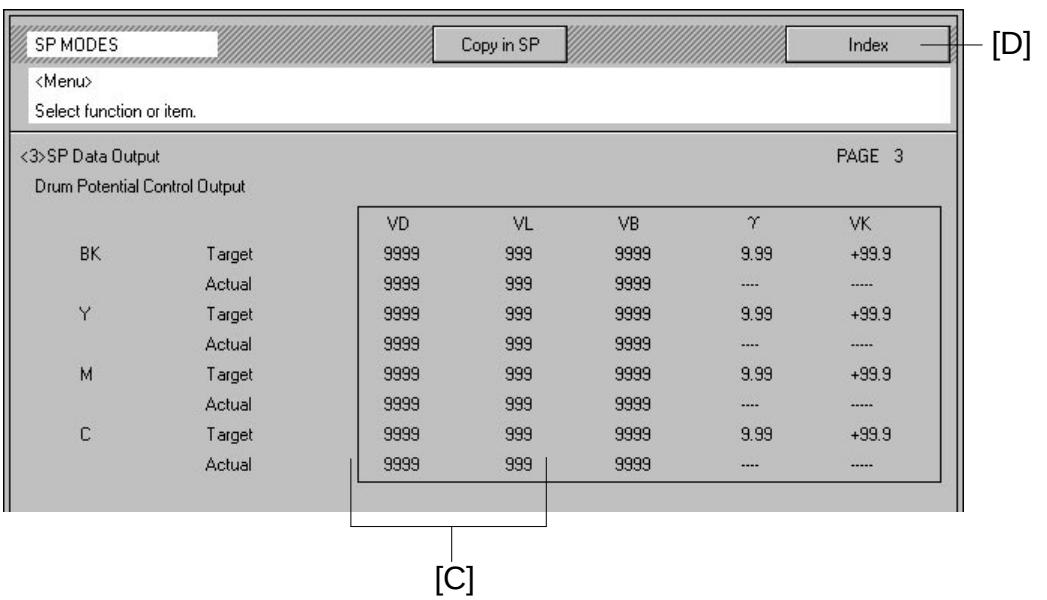

78. Touch the Exit key [A].

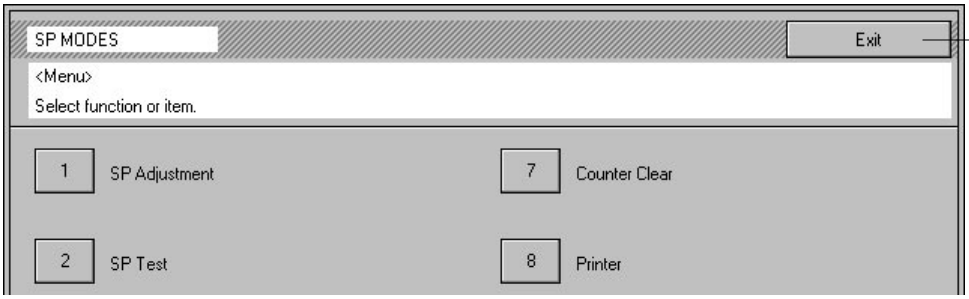

79. Turn off the main switch and place the accessory switch actuator in its original position.
80. Reinstall the right inner cover (3 screws) and turn on the main switch.
81. Copy the C-4 test chart in letter mode and printed photo mode.
82. Perform the ACC procedure. (See chapter 5.)

2.4 PAPER SIZE CHANGE

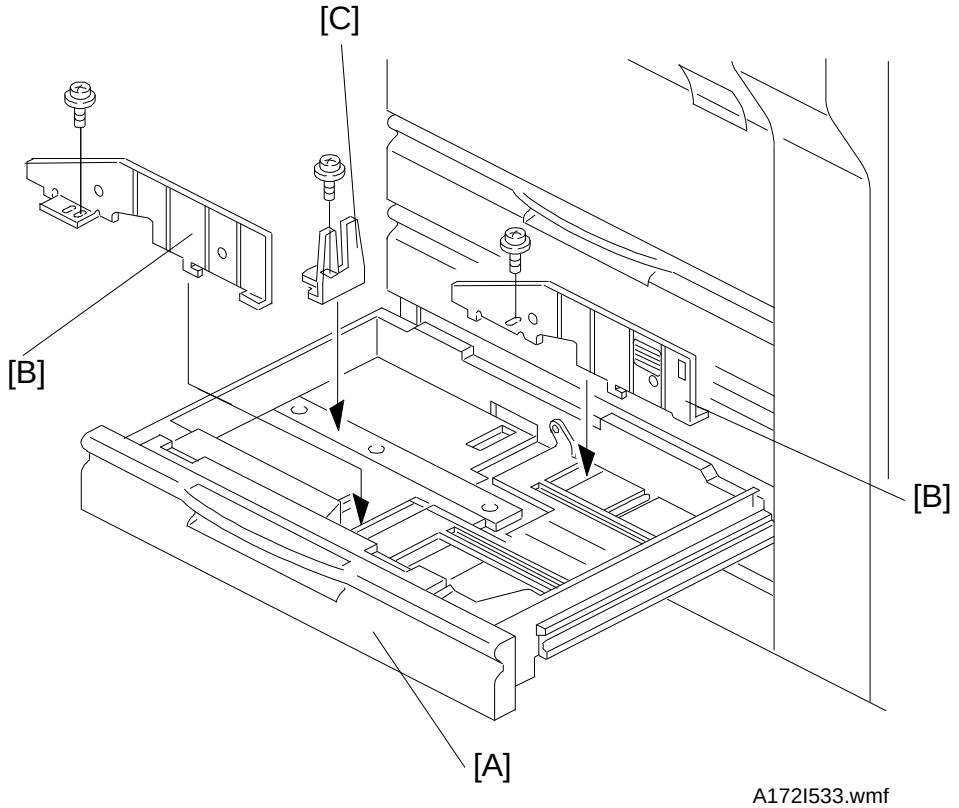

At the customer's request, change the paper size for the 3rd feed tray as follows.

1. Draw out the paper feed tray [A].
2. Change the position of the front and the rear side fences [B] (1 screw each) and the end fence [C] (1 screw) to match the paper size.

3. Enter SP Mode as follows:
   1) Press the clear modes key.
   2) Wait for 2 or 3 seconds while the display returns to the initial screen.
   3) Enter "107".
   4) Hold down the clear/stop key for more than 3 seconds.

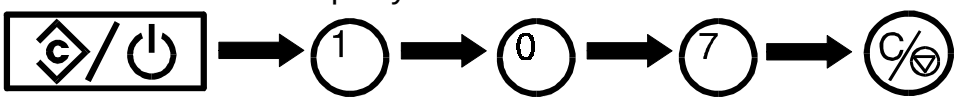

4. Touch the SP special feature key [A].

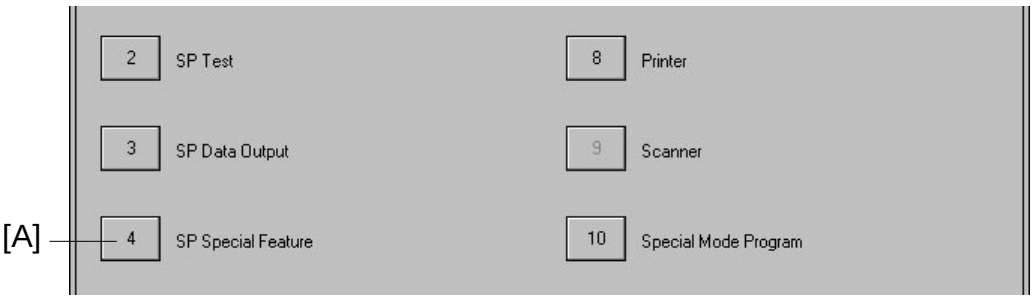

5. Touch the Previous key [B] to select the paper tray size setting mode (page 12).

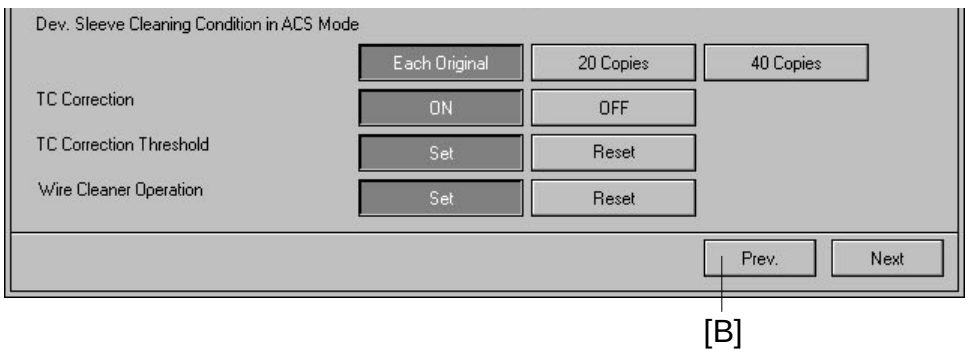

6. Touch the appropriate paper size key and direction key for the 3rd feed station. Then touch the Index key [C].

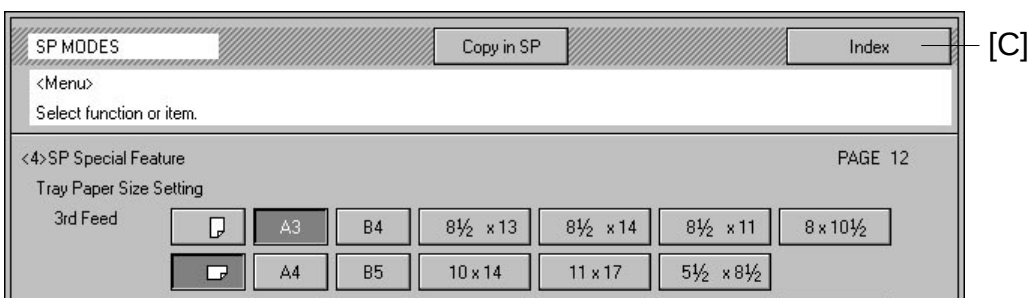

7. Touch the Exit key [A] to exit SP mode.

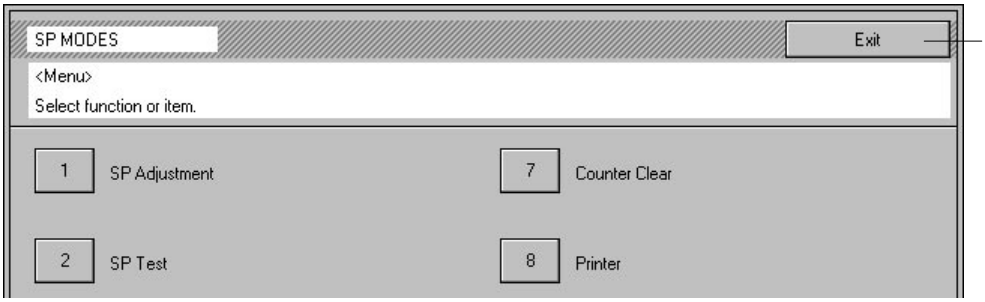

8. Check machine operation and copy quality.

2.5 OPTIONAL HOLDER (A702-18)

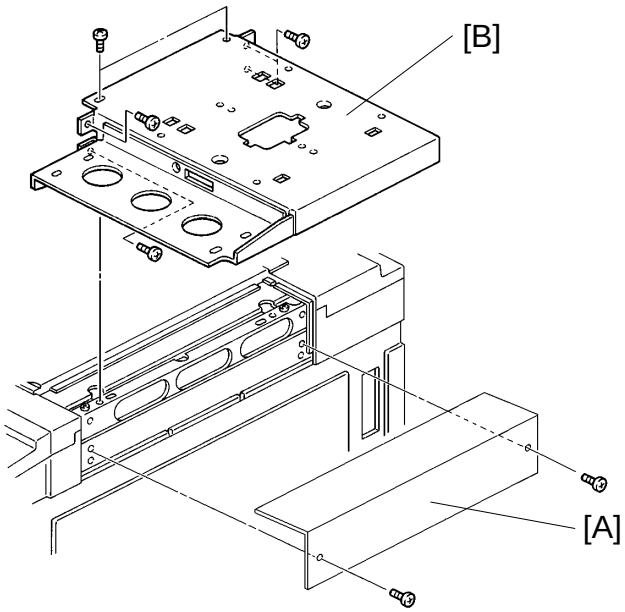

A172I534.img

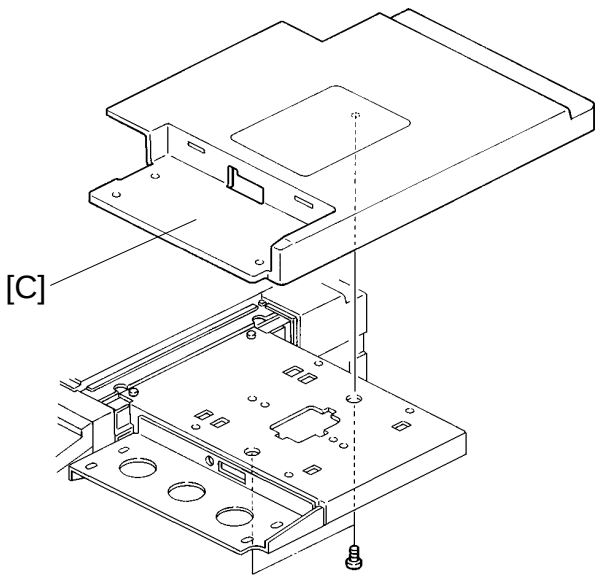

A172I535.img

1. Remove the right upper cover [A] (2 screws).
2. Install the holder base bracket [B] (6 screws).
3. Install the holder cover [C] (2 screws).

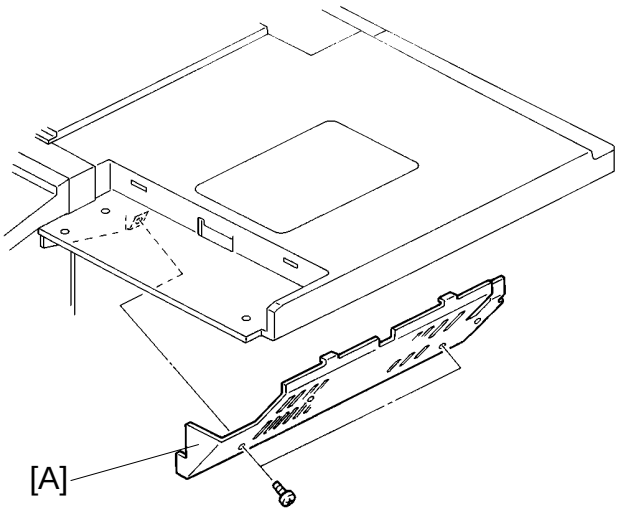

A172I536.img

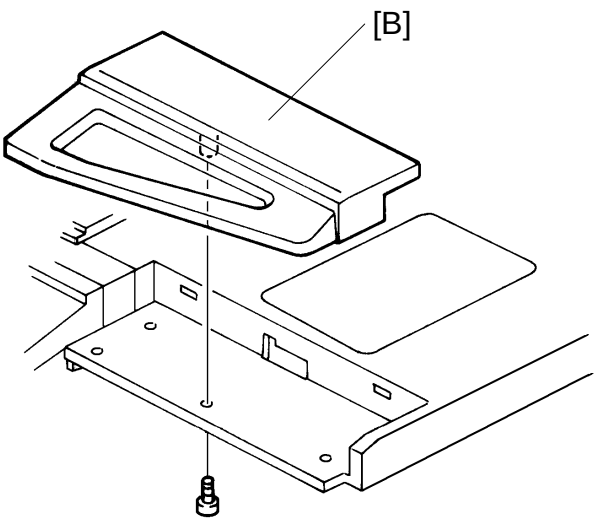

A172I537.img

4. Install the lower cover [A] (2 truss screws).
5. Install the front cover [B] (1 truss screw).

2.6 KEY COUNTER INSTALLATION

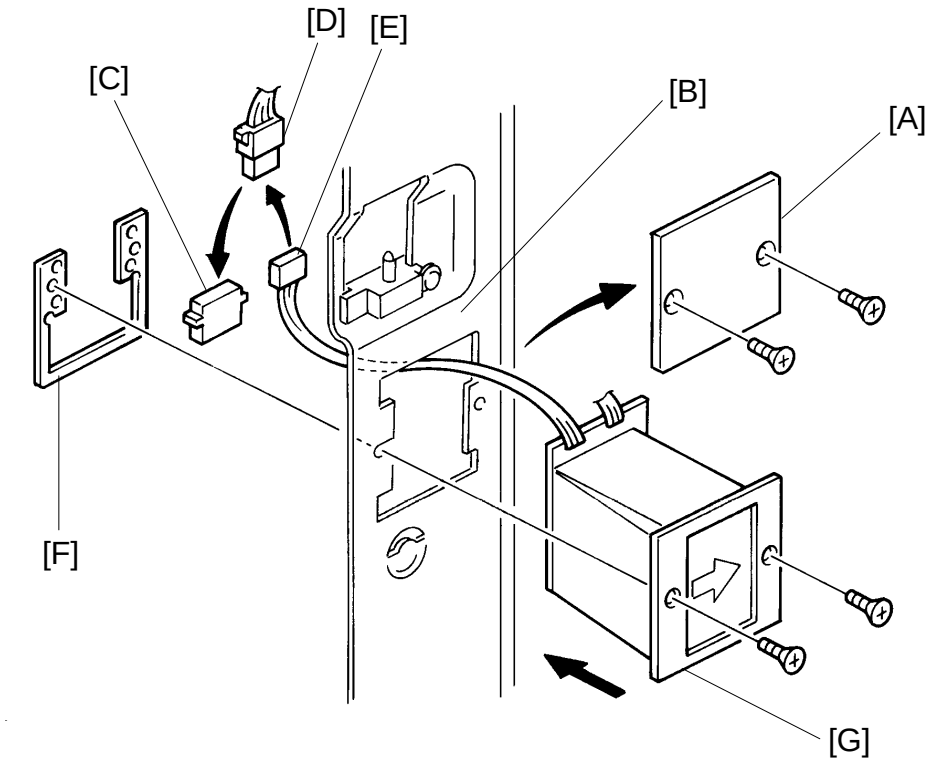

A172I538.img

1. Remove the following parts. (Refer to Exterior And Inner Covers.)
   - Upper rear cover
   - Right inner cover
   - Upper right cover
2. Remove the key counter cover [A] (2 screws) from the key counter holder bracket [B].
3. Disconnect the short-circuit connector [C] from the key counter connector [D].
4. Couple the connector [D] with the key counter connector [E].
5. Hold the securing plate [F] on the inside of the key counter holder bracket and insert the key counter holder [G].
6. Align the screw holes in the securing plate with the mounting holes in the key counter holder and secure the key counter holder (2 screws).

   NOTE: The securing plate has three different hole sizes. Use the holes that match those on the key counter holder that you are installing.
7. Reinstall all the covers and check the key counter operation.

2.7 UPPER AND LOWER TRAY HEATERS (OPTIONS)

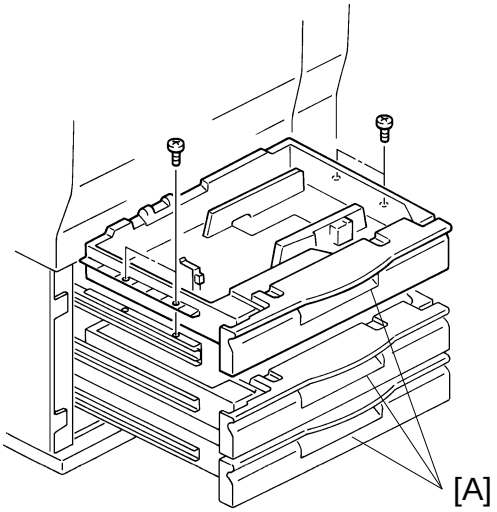

A172I539.img

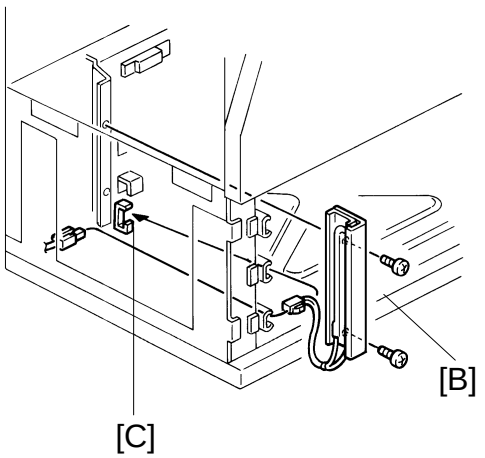

A172I540.img

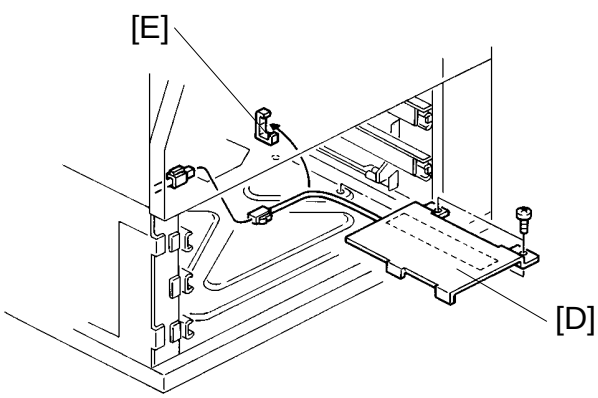

A172I541.img

NOTE: Both heaters are available as service parts.

1. Attach the heater to the bracket (2 M4 x 10 screws).
2. Pull out and remove all the paper feed trays [A] (4 screws each).
3. Install the upper tray heater assembly [B] (2 M4 x 8 screws).
4. Mount the harness in the clamp [C] and connect as shown.
5. Install the lower tray heater assembly [D] (2 M4 x 8 screws).
6. Mount the harness in the clamp [E] and connect as shown.
7. Reinstall the paper feed trays [A].

3. DUAL JOB FEEDER (A610)

3.1 ACCESSORY CHECK

Check the accessories against the following list:

Description	Q'ty
1. Installation Procedure	1
2. NECR (-17, -27 only)	1
3. Stepped Screw	2
4. Sponge Retainer	1
5. Philips Pan Head Screw with Washer - M5 x 10	2
6. Hinge Stopper Bracket	2
7. Philips Pan Head Screw - M4 x 6	2
8. Feed-out Guide Mylar	1
9. Decal	1

3.2 INSTALLATION PROCEDURE

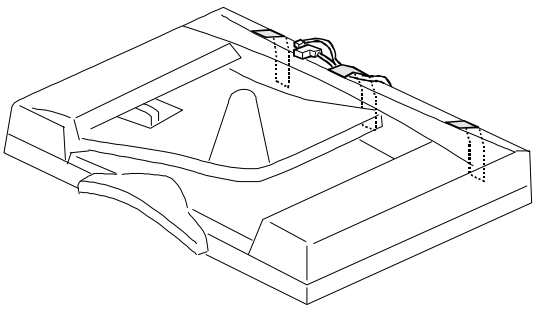

A610I500.wmf

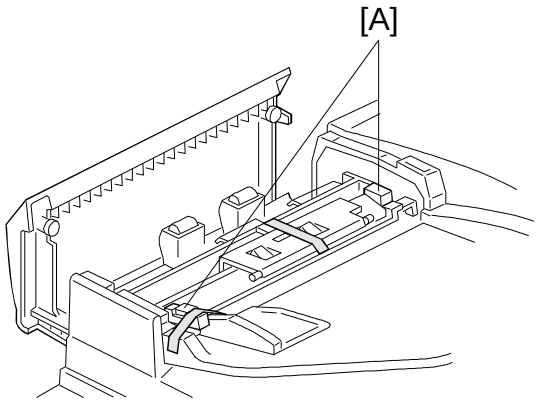

A610I501.wmf

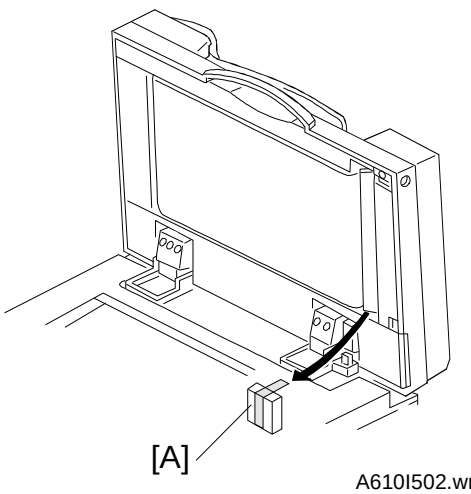

A610I502.wmf

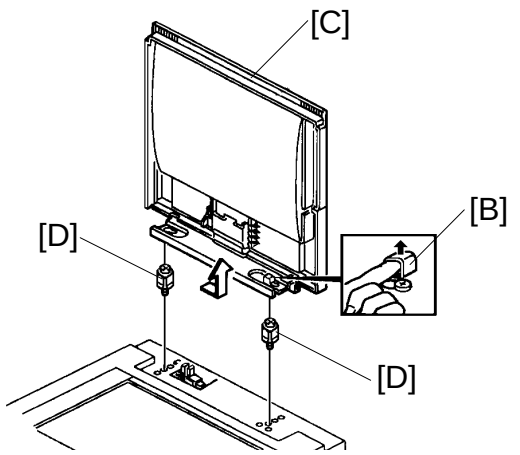

A610I503.img

1. Remove the tape strips and the cushions [A] as shown.
2. While raising the lock plate [B], slide the platen cover [C] to the right and remove it.
3. Remove the platen cover mounting screws [D].

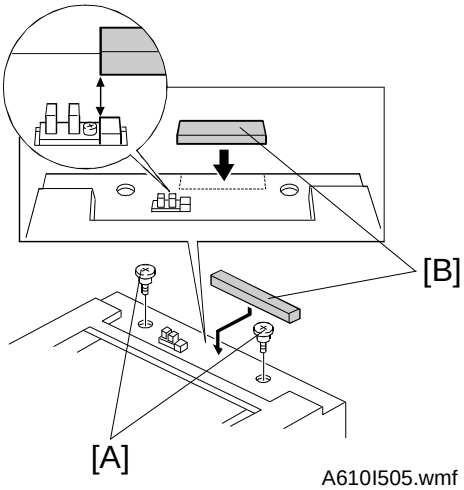

A610I505.wmf

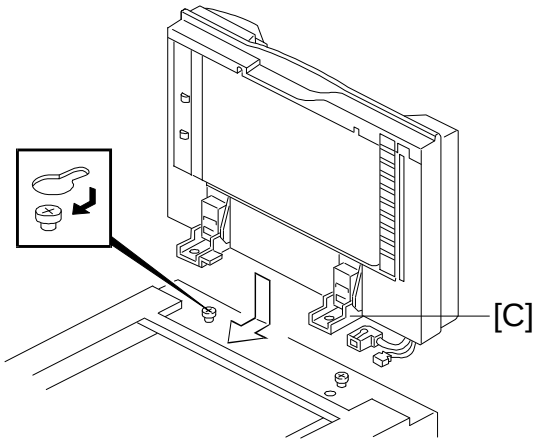

A610I504.wmf

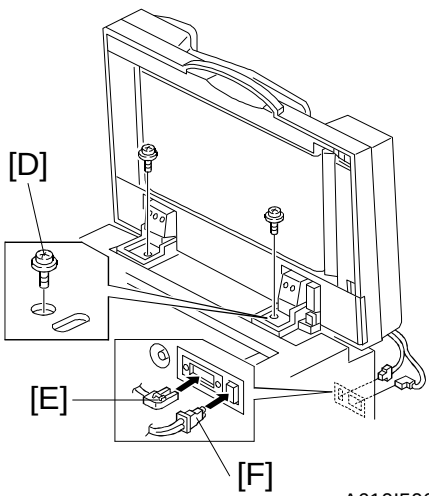

A610I506.wmf

4. Install two stepped screws [A].
5. Attach the sponge retainer [B] to the top cover of the copier as shown.
6. Mount the DF on the copier by inserting the two stepped screws into the holes in the DF hinge [C], then slide the DF to the front, as shown.
7. Secure the DF to the copier by using the screw holes as shown (2 screws - M5 x 10 [D]).
8. Remove the small cap on the upper rear cover then connect the main connector [E] and the fiber optic cable connector [F].

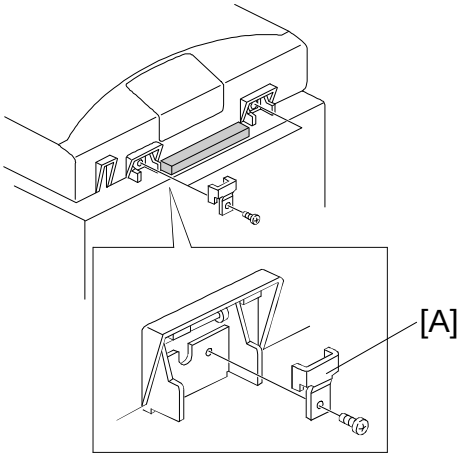

A610I507.wmf

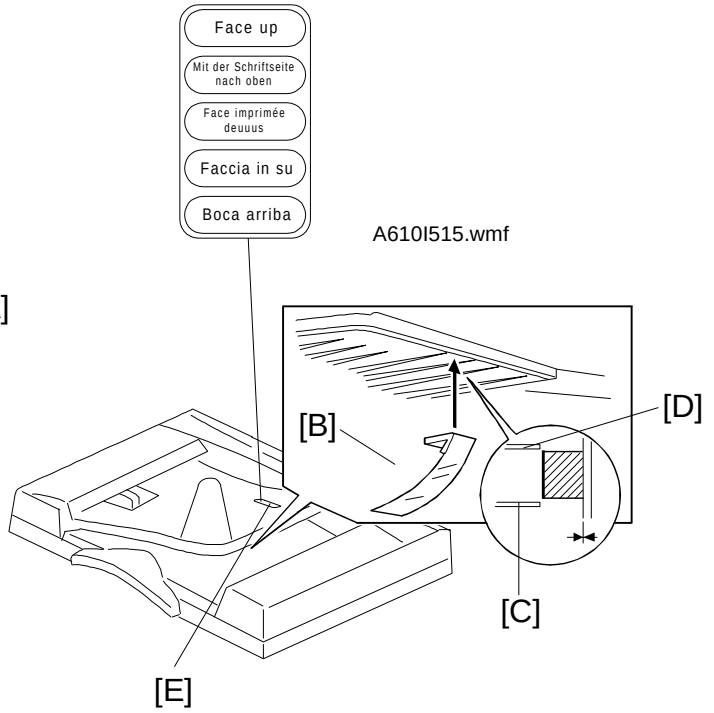

A610I515.wmf

A610D508.wmf

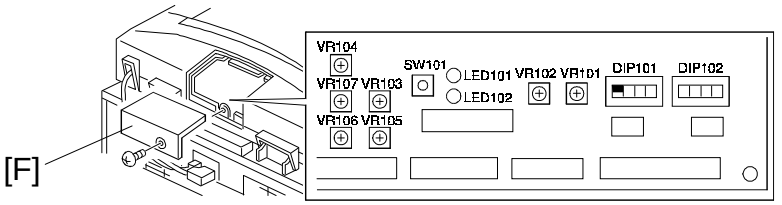

A610I509.wmf

9. Secure the hinge stopper bracket [A] as shown (2 screws - M4 x 6).
10. Attach the feed-out guide mylar [B] under the original table. Attach it between the 3rd [C] and 4th [D] ribs (counting from the rear).
11. Apply the appropriate decal at [E].
12. Remove the small cover [F] at the rear of the DF upper cover (1 screw), and turn on DIP SW101-1.
13. Plug in the copier and turn on the main switch.

    NOTE: The copier automatically recognizes that the DF has been installed.
14. Make copies using the DF and confirm the machine functions properly.
15. Explain to the customer that settings may now be changed, depending on the characteristics of each original.

4. SORTER (A322)

4.1 ACCESSORY CHECK

Check the accessories against the following list:

Description	Q'ty
1. Installation Procedure	1
2. NECR (-17 only)	1
3. Stud	2
4. Knob Screw	2
5. Sorter Bin	15
6. Interrupt Bin	1
7. Grounding Screw	1

Sorter Adapter

Description	Q'ty
1. Fan Motor Assembly	1
2. Air Outlet Plate	1
3. Harness Clamp	2
4. Relay Harness	1
5. Guide Plate Assembly	2
6. Philips Pan Head Screw - M4 x 6	9

4.2 INSTALLATION PROCEDURE

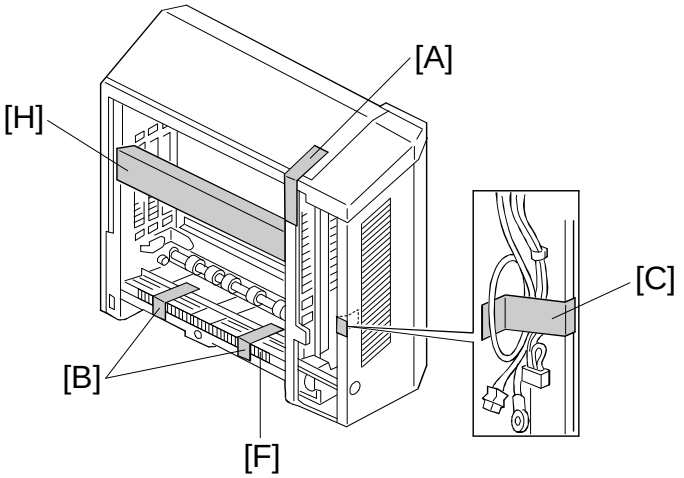

A322I500.wmf

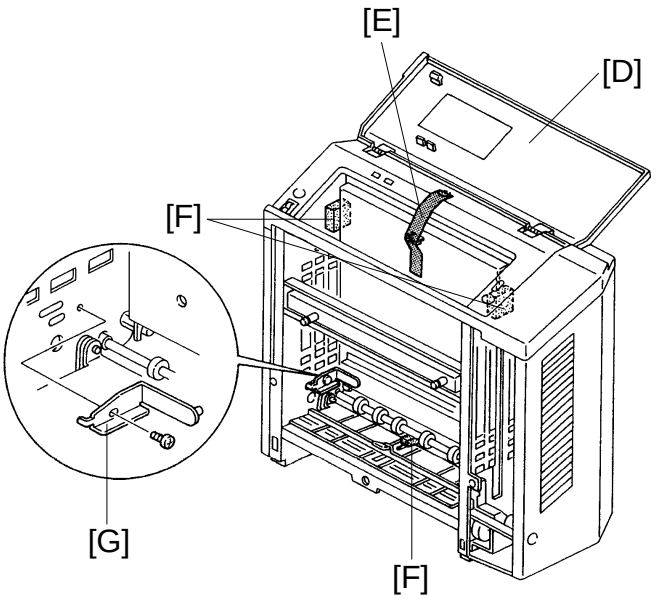

A322I501.img

NOTE: To install this sorter on the A172/A199 copier, the A527 sorter adapter kit (option) is necessary.

1. Remove four pieces of tape:
   - Sorter Top Cover [A] (1 pc)
   - Transport Guide [B] (2 pcs)
   - Sorter Harness [C] (1pc)

2. Open the top cover [D] and remove the following items:
   - Tape [E] (1 pc)
   - Cushion [F] (4 pcs)
   - Clamp [G] (1 pc) [1 screw]
   - Cardboard [H] (1 pc)

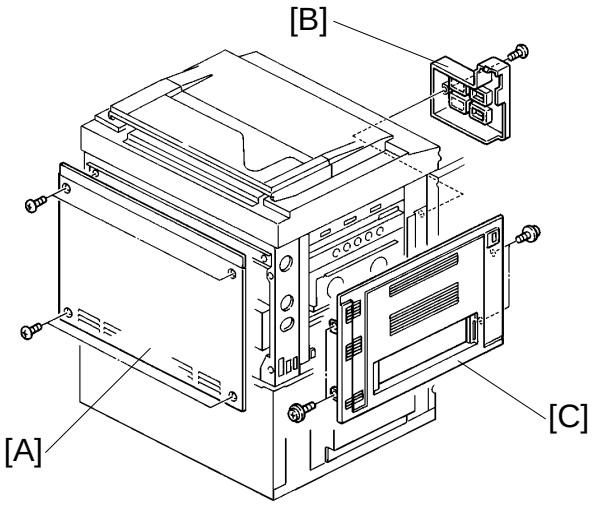

A322I502.img

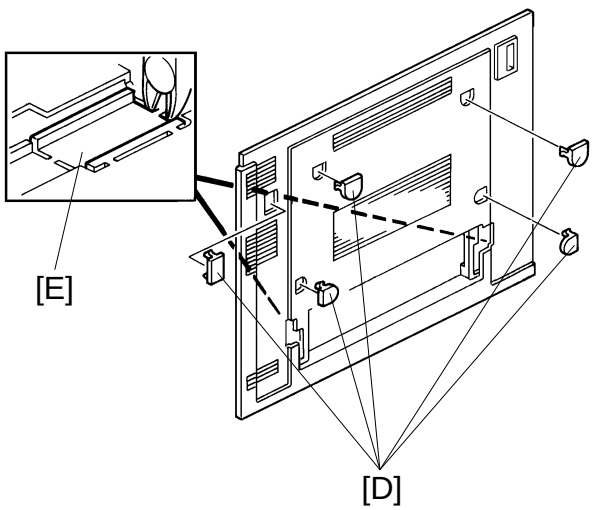

A322I503.img

3. Remove the upper rear cover [A] (4 screws).
4. Open the front doors, then remove the left inner cover [B] (1 screw).
5. Remove the upper left cover [C] (4 screws).
6. Remove the 5 caps [D].
7. Remove the portion of the cover [E] with cutting pliers as shown.
8. Reinstall the upper left cover.

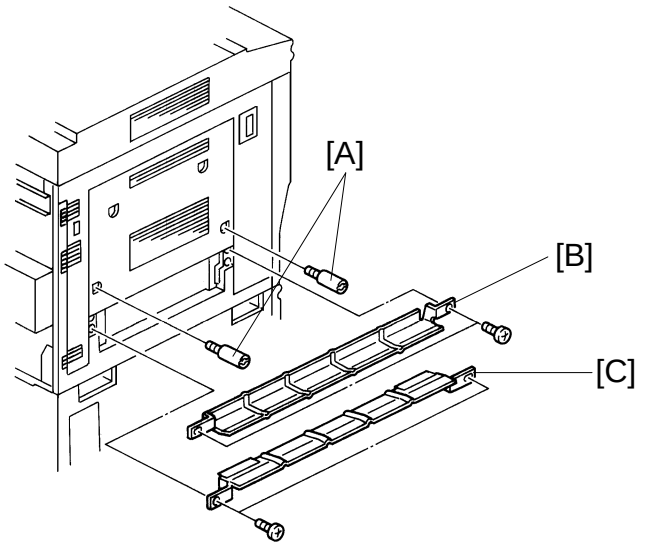

A322I504.img

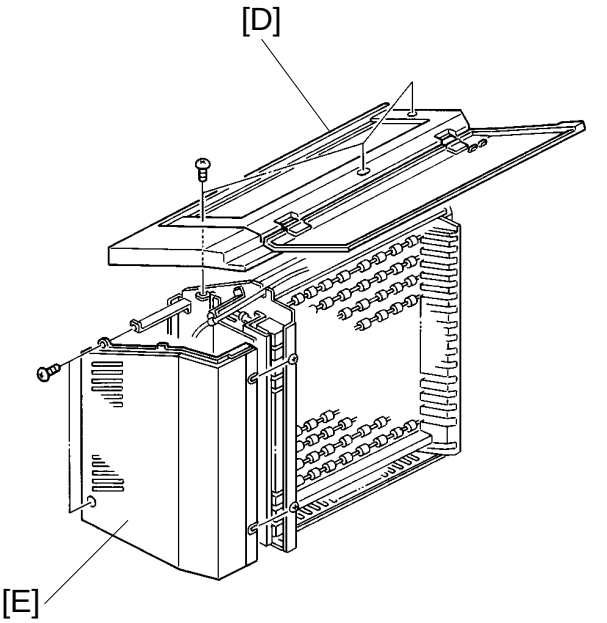

A322I505.img

9. Install the studs [A].
10. Install the upper guide plate [B] (2 screws).
11. Install the lower guide plate [C] (2 screws).
12. Remove the sorter top cover [D] (3 screws).
13. Remove the sorter rear cover [E] (4 screws).
14. Remove the sorter front cover (2 screws).

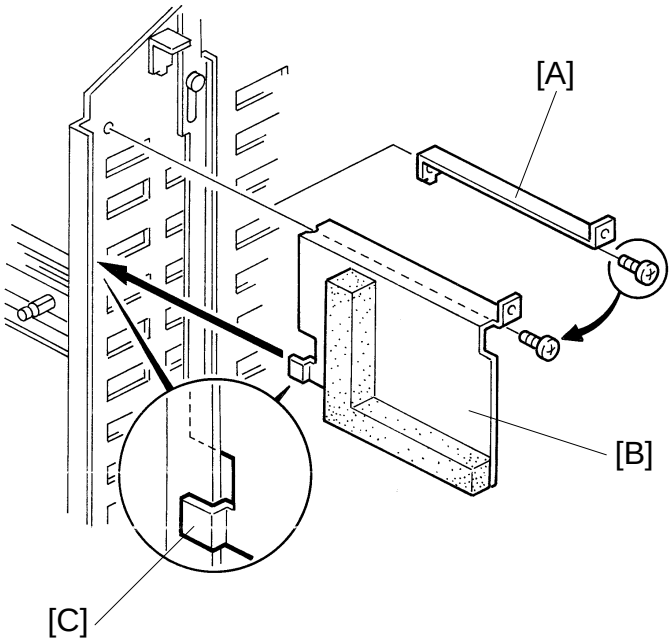

A322I506.img

15. Remove the rear cover mounting bracket [A] (1 screw).
16. Install the air outlet plate [B] where the rear cover mounting bracket was previously installed (1 screw). Use the screw which was used for the rear cover mounting bracket.

    NOTE: Make sure the air outlet plate hook [C] engages the sorter rear frame as shown.

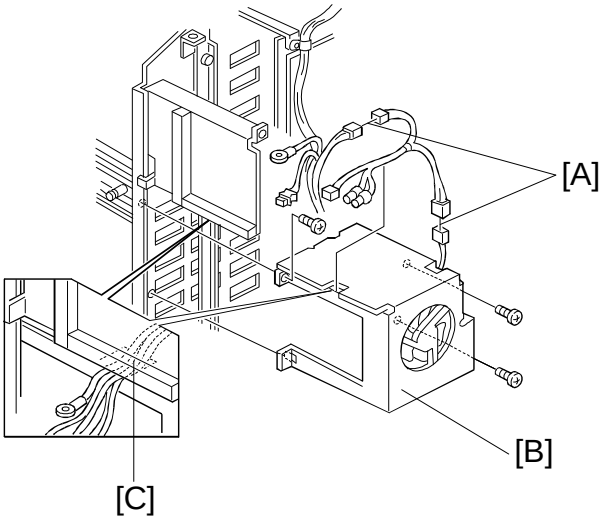

A322I507.wmf

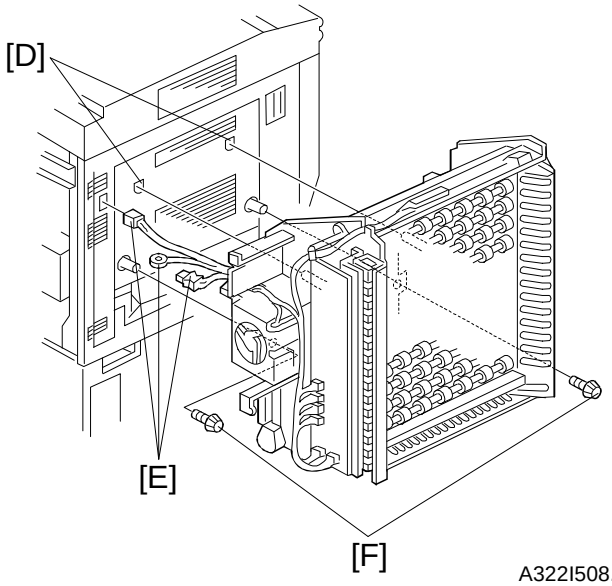

A322I508.wmf

17. Connect the accessory harness connectors [A] to the fan assembly connectors.
18. Install the fan assembly [B] on the sorter rear frame (3 screws and 1 connector).

    NOTE: Make sure to run the harness through the cutout [C] as shown.
19. Install the sorter into the mounting holes [D] on the copier while inserting the sorter harnesses [E] through the opening in the left cover (connect the 2 studs of the copier to the sorter).
20. Attach the sorter to the copier with two screws (2 knob screws [F]).

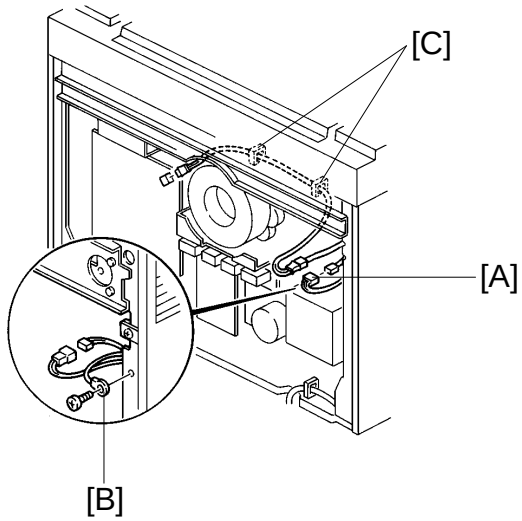

A322I509.img

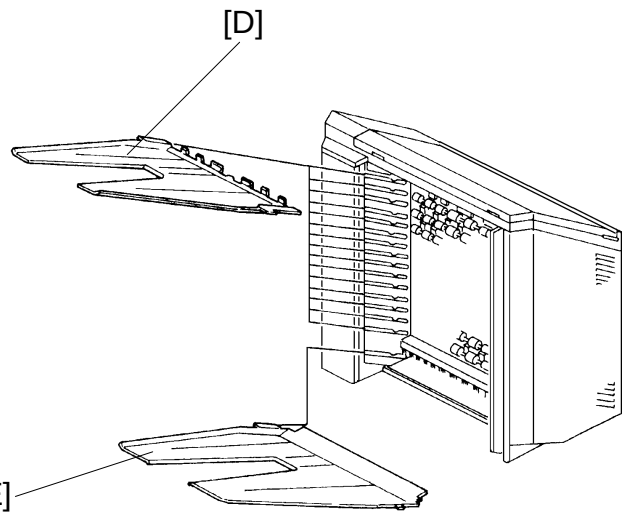

A322I510.img

21. Remove the protective cover and secure the 4p connector [A].
22. Secure the grounding wire [B]* (1 grounding screw with toothed washer).

    NOTE*: For all models other than those intended for North America, the green wire is intended as a functional earth and should be connected as shown.
23. Install two wire clamps [C].
24. Connect the fiber optics connector to CN515 of the main control board.
25. Insert all 15 sorter bins [D].
26. Insert the interrupt bin [E].
27. Install all covers on the copier and the sorter.
28. Check machine operation.

5. FILM PROJECTOR (A718)

5.1 ACCESSORY CHECK

Make sure that each accessory listed in the following table is in the box. Also check the condition of each item.

Description	Q'ty
1. Mirror Unit	1
2. Power Cord	1
3. Optical Fiber Cable	1
4. Film Strip Holder	1
5. Slide Holder	1
6. Glass Mount Holder	1
7. Base Film (FUJI, KODAK, AGFA)	3
8. Slide Mount	1
9. Correction Filter (P, N)	2
10. Blower Brush	1
11. Projection Lamp	1
12. Film Position Sheet	2
13. Positioning Pin	2
14. Spacer	4
15. Philips Pan Head Screw - M4 x 8	2
16. Philips Pan Head Screw - M4 x 12	4
17. Spring Washer - M4	1
18. Installation Procedure	1
19. NECR (-17, -27 only)	1

5.2 INSTALLATION PROCEDURE

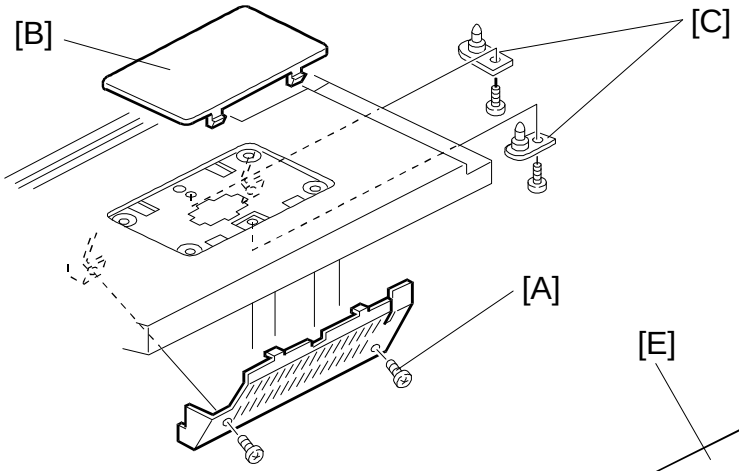

A718I520.wmf

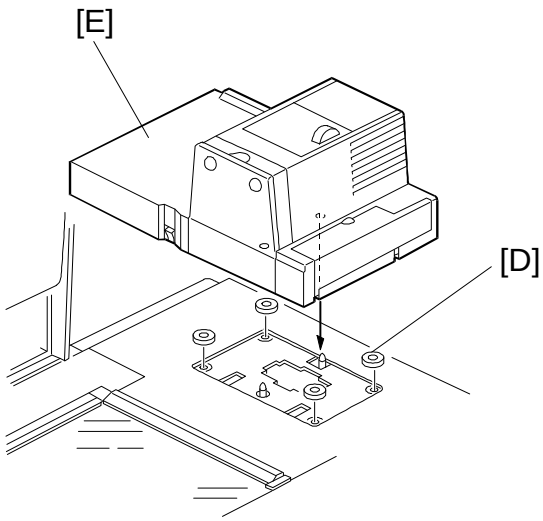

A718I521.wmf

NOTE: Holder Type C (A702-18) must be installed before starting the following procedure.

1. Remove the lower cover [A] from the holder bracket (2 screws).
2. Remove the cover plate [B] from the holder.
3. Install two positioning pins [C] on the holder bracket as shown (2 screws - M4 x 8) and reinstall the lower cover.
4. Set four spacers [D] at the four corners on the hollow surface of the holder.
5. Place the projector unit [E] on the holder by aligning the holes of the projector base plate with the positioning pins.

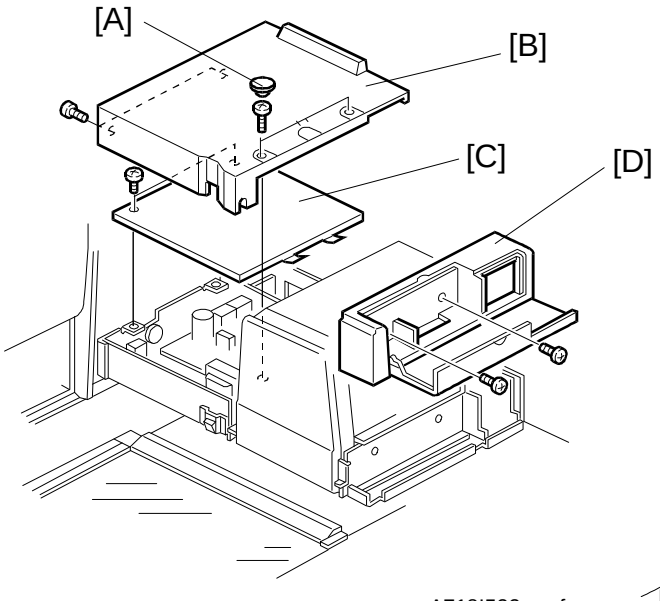

A718I522.wmf

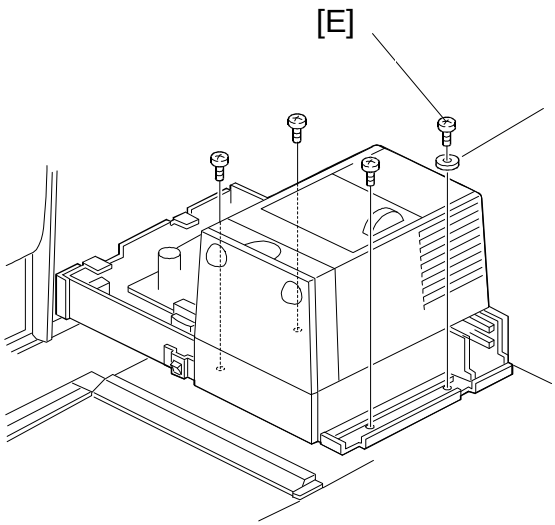

A718I523.wmf

6. Remove two rubber caps [A] and cover [B] (4 screws).
7. Remove the shield plate [C] (2 screws).
8. Open the front cover and remove the front cover assembly [D] (2 screws).
9. ttach the projector unit to the holder with screws (M4 x 12).

NOTE: When securing the screw [E], insert the spring washer [F] between the screw and the projector unit. This spring washer secures the grounding of the projector unit's frame.

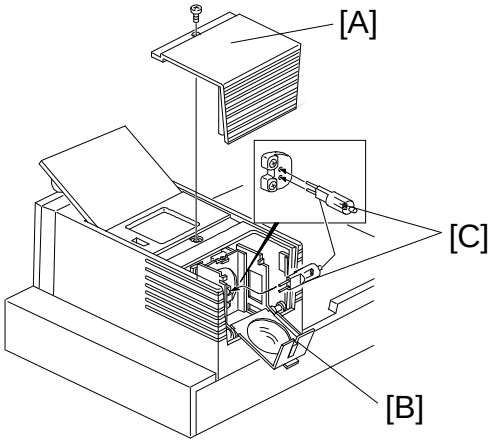

A718I503.wmf

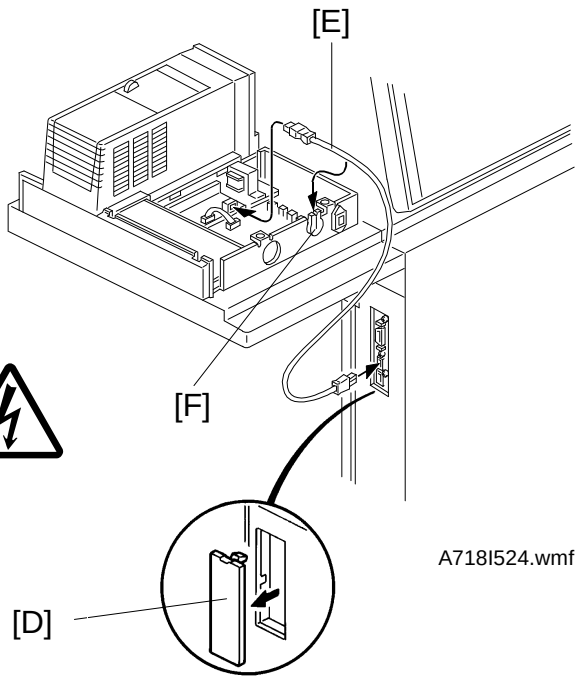

A718I524.wmf

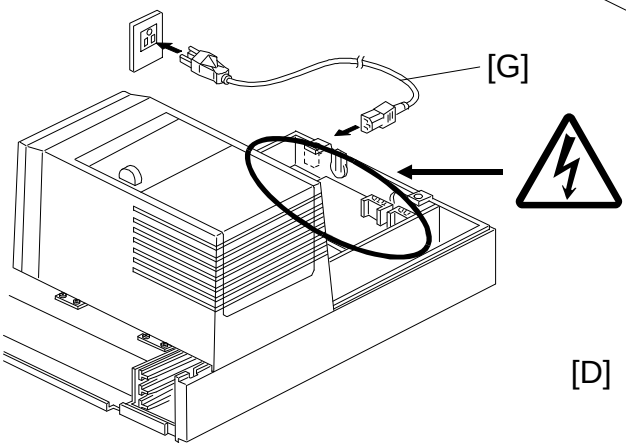

A718I507.wmf

10. Remove the lamp cover [A] (1 screw) and open the reflector cover [B]. Then, plug the projector lamp [C] into the socket. Then close the reflector cover.

    NOTE: The projector lamp should be inserted horizontally until it stops.

11. Remove the cap [D] from the upper right cover of the copier.

12. Run the optical fiber cable [E] between the projector control board (CN6) and the copier through the rubber bushing [F] as shown.

13. Connect the power cord [G] to the power inlet and plug it into the wall outlet.

⚠ WARNING

After plugging the power cord into the wall outlet, do not touch the electrical components inside the projector unit other than the test switch used in steps 14-4) and -8). Otherwise, you might receive an electrical shock. ⚠

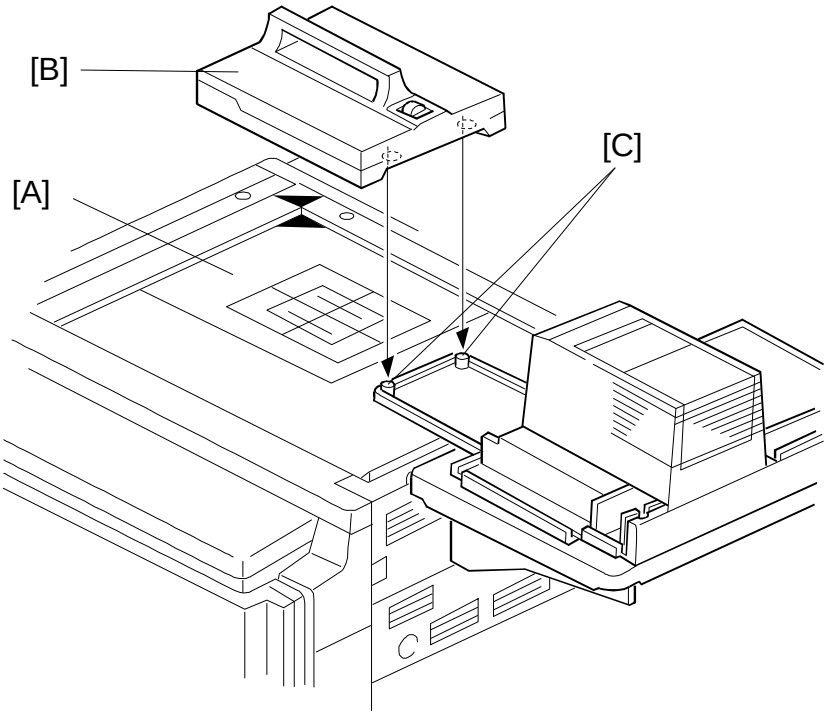

A718I509.wmf

14. Adjust the height as follows.
    1) Place the film position sheet [A] on the exposure glass, aligning it at the rear left corner.
    2) Put the mirror unit [B] on the exposure glass by aligning the holes with the positioning pins [C] on the lens cover.

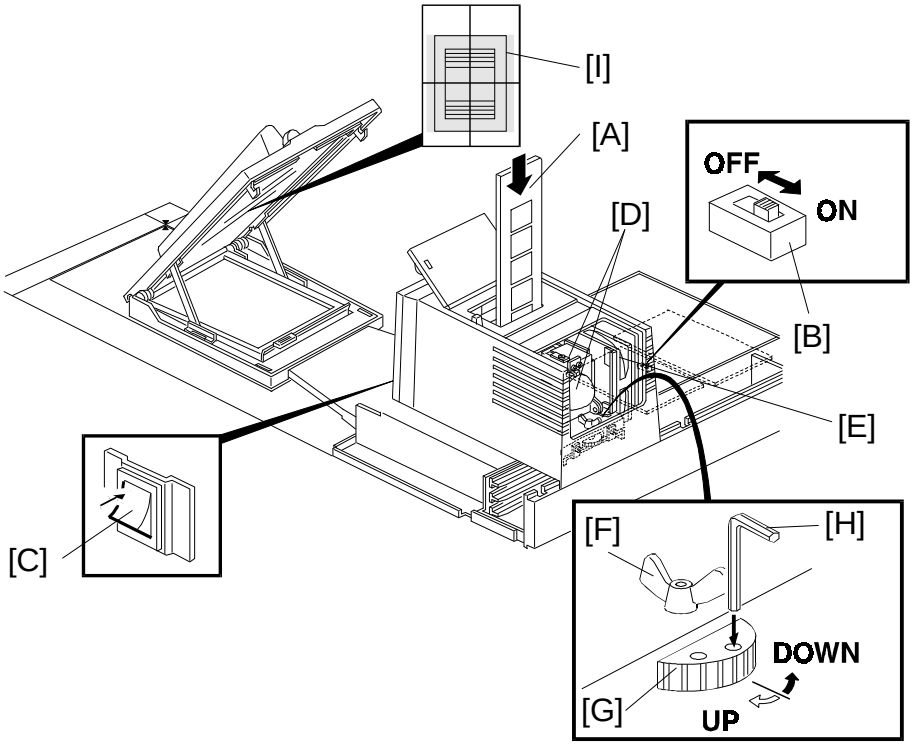

A718I511.wmf

3) Insert the film strip holder [A] into the film projector unit at the base film setting position.
   NOTE: Push the film strip holder gently to confirm that the film strip holder has been inserted correctly.

4) Turn on the test switch [B] on the projector control board and turn on the projector unit main switch [C].

⚠ CAUTION

The lamp housing and reflector [D] will become very hot. The lamp cooling fan [E] will start turning suddenly when the lamp housing temperature becomes high. Keep hands away from those components to avoid any injury.

5) Loosen the wing nut [F].
6) Adjust the position of the projected light by turning the dial [G] with a hexagon wrench [H] until it is at the center of the 4" x 5" frame [I] which is reflected in the mirror unit.
7) Tighten the wing nut [F].
8) Turn off the projector main switch and the test switch.
9) Reinstall the lamp cover and other covers.

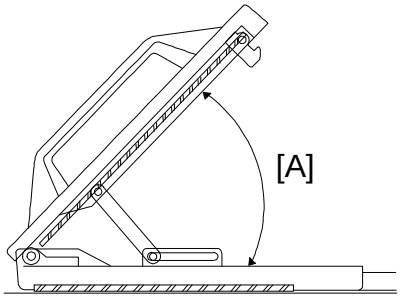

A718I512.wmf

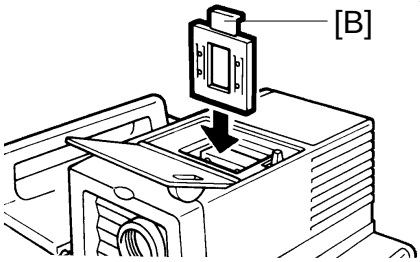

A718I513.img

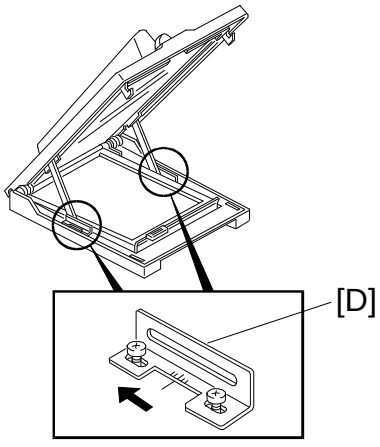

A718I514.wmf

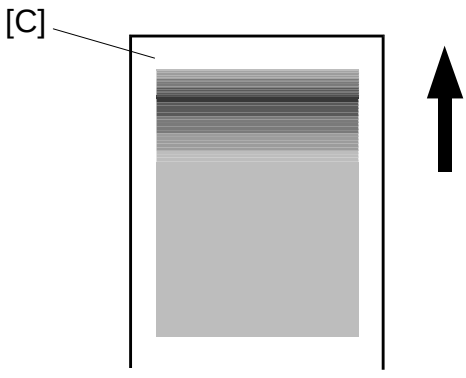

A718I515.wmf

15. Adjust the angle [A] of the mirror unit as follows:
    1) Turn on the copier main switch and wait for the ready condition.
    2) Open the lens cover and position the mirror unit on the exposure glass.
    3) Put the correction filter [B] for positive films in the filter slot.
    4) Turn on the projector main switch and press the option key.
    5) Perform shading using the positive 35 mm slides mode.
    6) Put one of the orange base films in the slide holder and position it in the projector unit.
    7) Make a copy of the orange film.
    8) Check if the orange image is even or not. If the image is uneven, adjust the mirror angle as follows:
        8-1) When the leading part is dark [C].
            a) Move the front and rear arm guides [D] to the left so that the mirror angle is increased (2 screws each).
            NOTE: Position the arm guides at the same location at front and rear, using the ruler decals. This prevents the mirror from being twisted.
            b) Make a copy of the orange film.
            c) Repeat steps a) and b) until the orange image becomes even.

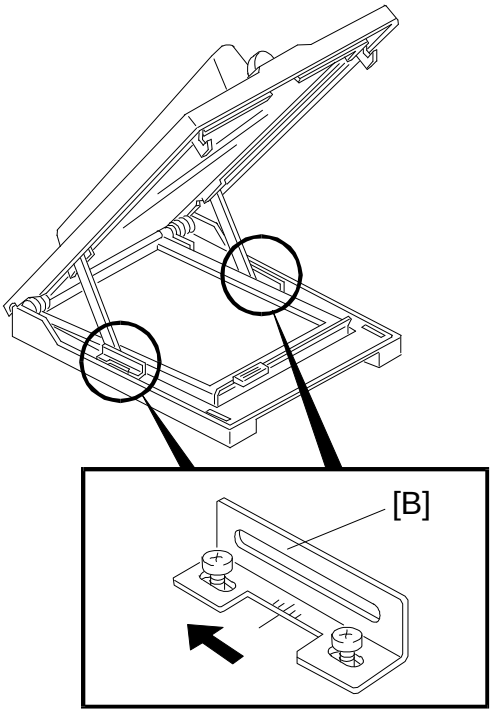

A718I514.wmf

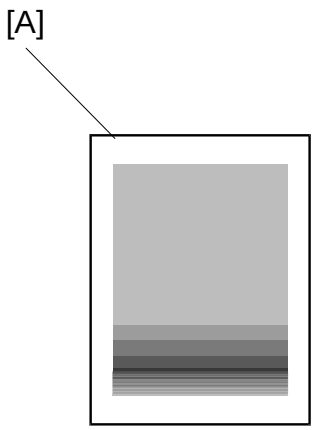

A718I516.wmf

8-2) When the trailing part is dark [A].
a) Move the front and rear arm guides [B] to the right so that the mirror angle is reduced (2 screws each).
NOTE: Position the arm guides at the same location at front and rear, using the ruler decals. This prevents the mirror from being twisted.
b) Make a copy of the orange film.
c) Repeat steps a) and b) until the orange image becomes even.

16. Check some copy images from positive or negative films.

6. CONTROLLER INTERFACE TYPE-C (A583-05)

6.1 ACCESSORY CHECK

Make sure that each accessory listed in the following table is in the box. Also check the condition of each item.

Description	Q'ty
1. Controller Interface Board	1
2. PTL	1
3. Controller Interface Harness	1
4. Fuse Harness	1
5. Stepped Screw - M3	1
6. Philips Pan Head Screw - M3 x 8	1
7. Philips Pan Head Screw - M4 x 8	6
8. Wire Saddle	2
9. Ferite Core	2
10. Fiber Optics Cable	1
11. PTL Relay Harness	1
12. Installation Procedure	1

6.2 INSTALLATION PROCEDURE

1. Remove the covers.

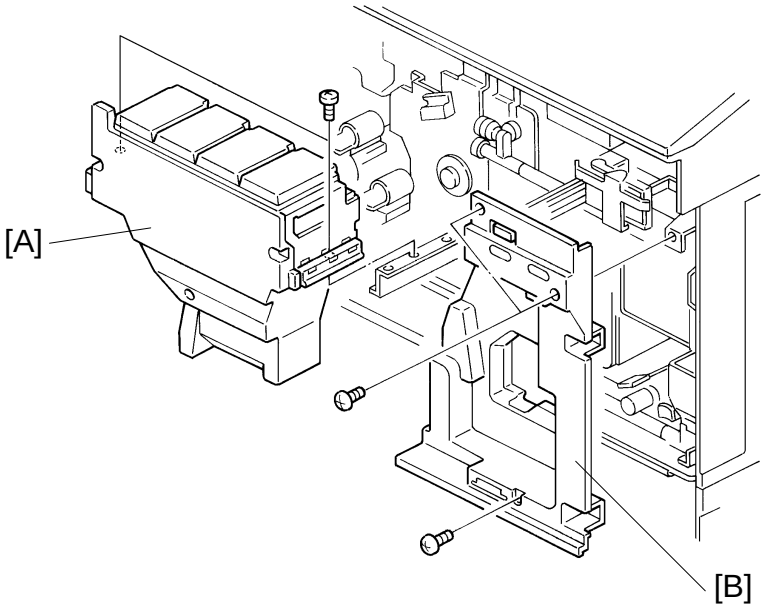

A583I500.img

⚠ CAUTION

Turn off the main switch and unplug the machine before starting the following procedure.

1. Open the front doors and remove the toner tank unit [A] (2 screws).
2. Remove the right inner cover [B] (3 screws).
3. Remove the upper rear cover (4 screws).
4. Remove the lower rear cover (4 screws).

2. Attach the PTL (Pre-Transfer Lamp) to the belt cleaning unit.

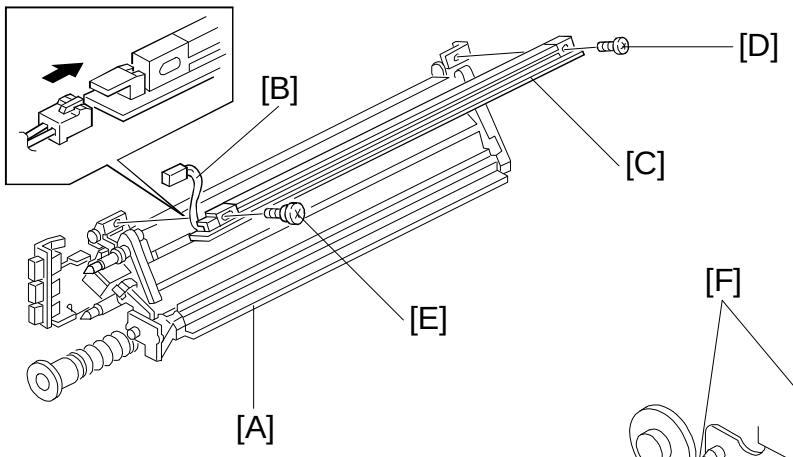

A583I501.wmf

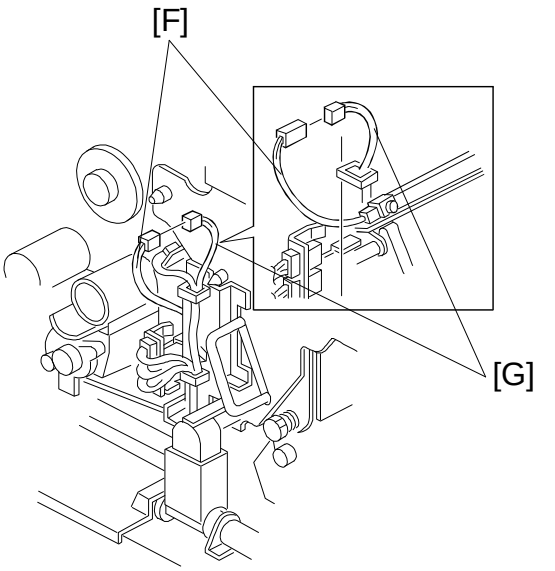

A583I502.wmf

1. Lower the toner collection duct (1 hook).
2. Disconnect the three connectors and free them from the three harness clamps.
3. Remove the transfer belt stay (5 screws).
4. Remove the belt cleaning unit [A] by pulling it out.
5. Connect the PTL relay harness [B] (from the kit) to the PTL [C].
6. Attach the PTL [C] to the cleaning unit [A]
   (M3 x 8 [D] ,stepped screw - M3 [E]).
7. Reinstall the belt cleaning unit.
8. Reinstall the transfer belt stay (5 screws, 3 connectors and 3 clamps).
9. Connect the PTL relay harness [F] to the PTL harness [G] (from the copier).
10. Reinstall the toner collection duct (1 hook).

3. Install the interface board and harness.

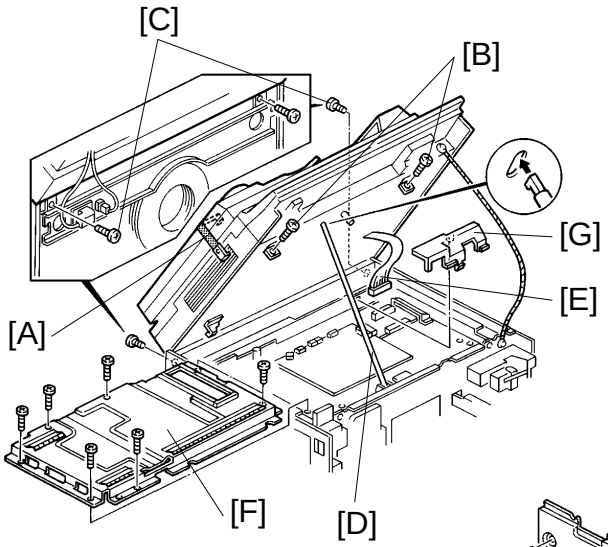

A583I503.img

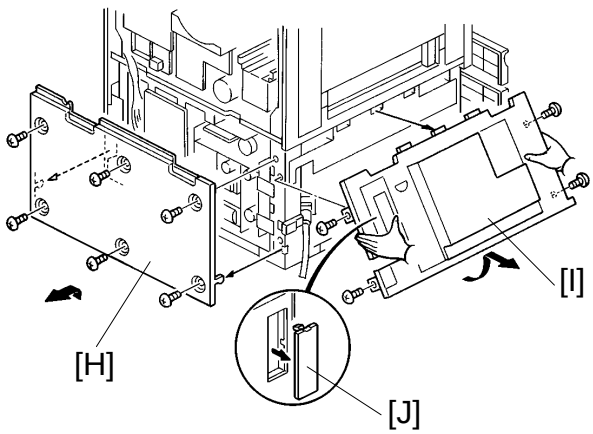

A583I504.img

1. If the DJF is equipped on the copier, secure the DJF to the scanner unit with the DJF fixing belt [A] as shown.
   If the Film Projector Unit is installed on the copier, remove the mirror unit.
2. Remove the two fixing screws [B] at the front of the scanner unit.
3. Remove the two fixing screws [C] at the rear of the scanner unit.
4. Open the scanner unit and set the scanner support bar [D] as shown.
5. Disconnect the shielded flat cable [E] and remove the IPU board cover [F] (2 long and 5 short screws).
6. Remove the harness cover [G] from the right rear corner.
7. Remove the lower rear cover [H] (6 screws) and the lower left cover [I] (4 screws). Then remove the cap [J] from the lower left cover.

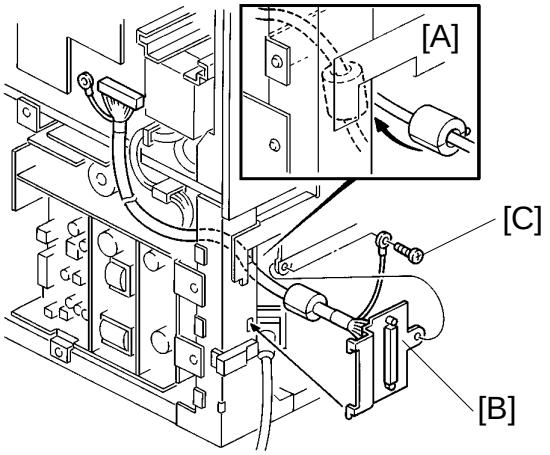

A583I505.img

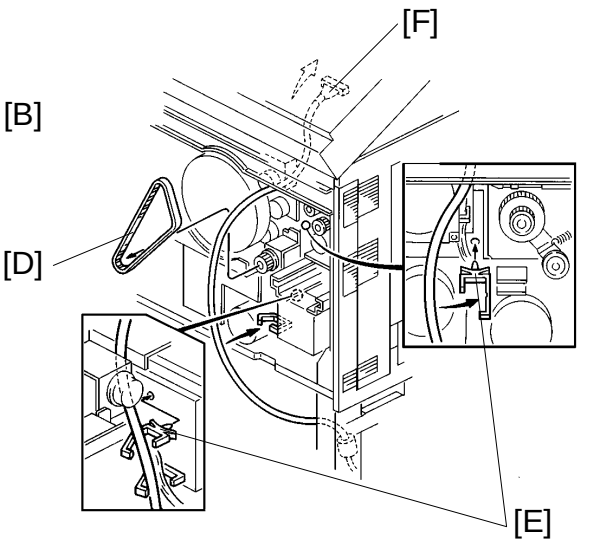

A583I506.img

8. Route the harness above the left rail of the 1st tray [A] from the left side to the rear.
9. Place the controller interface harness bracket [B] on the left side frame and secure it with the grounding wire (1 screw) [C].
10. Remove the timing belt [D] and install the two harness clamps [E].
11. Route the harness from the lower to the upper as shown [F].

    NOTE: Route the harness behind the charge inlet fan duct.

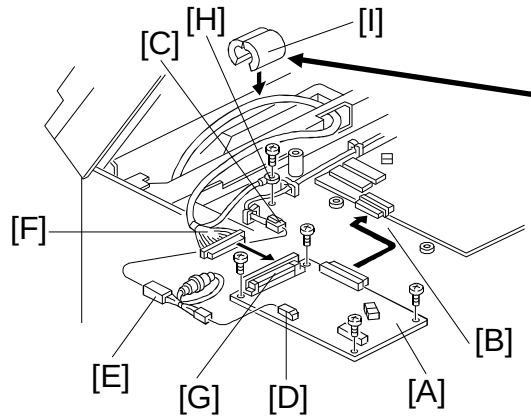

A583I507.wmf

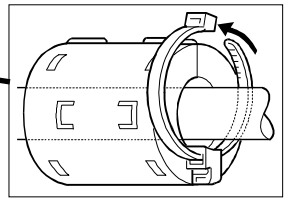

[Fig. 2]

A583I508.wmf

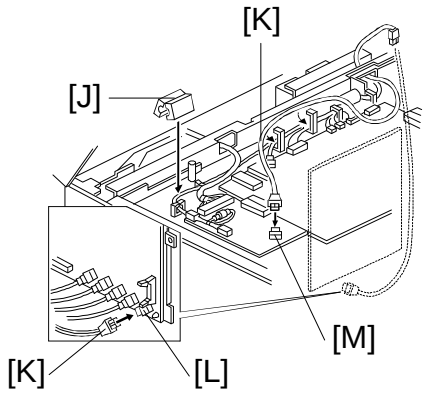

A583I510.wmf

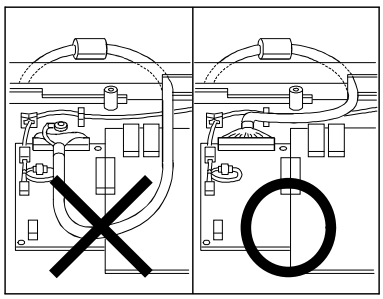

[Fig. 1]

A583I509.wmf

12. Install the controller interface board [A] by connecting it to CN308 [B] of the IPU board (4 screws).
13. Connect the white 2P connector [C] to CN301 [D] of the controller interface board via the fuse harness [E].
14. Connect the controller interface harness [F] to CN303 [G] of the controller interface board. Then secure the grounding wire [H] to the IPU board bracket (1 screw).

    NOTE: 1. Do not route the harness over the board to prevent electromagnetic wave. (See [Fig. 1])

    2. Make sure that the connectors are set properly. Otherwise, the copier might not achieve the ready condition or blank copies might be made.

15. Install the gray ferrite core [I] and the white ferrite core [J] as shown.

    NOTE: Secure the gray ferrite core with the harness band as shown [Fig. 2].

16. Connect the fiber optics cable [K] to CN514 [L] on the main control board and route it to the IPU board area following other fiber cables.
17. Run the fiber optics cable through the harness clamps and connect it to CN304 [M] on the controller interface board.

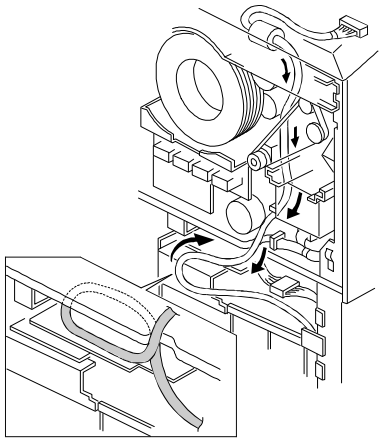

A583I511.wmf

18. Secure the interface harness with the three harness clamps and reinstall the timing belt as shown.

    NOTE: Route the remaining part of the harness along the top of the AC/DC Drive Board as shown. Position the harness near by the rear side plate so that the harness won't touch any moving parts such as timing belts and motors.

19. Reassemble the machine.

4. Connect to the Fiery and adjust the printer gamma.

1. Connect the Fiery controller to the controller interface connector with the cable provided from EFI.
2. Adjust the γ correction data for printer (See Section 5) and check the controller function.

SECTION 4

SERVICE TABLES

1. SERVICE PROGRAM MODE

1.1 SERVICE PROGRAM MODE OPERATION

The service program (SP) mode is used to check electrical data, change modes, and adjust values.

1.1.1 Service Program Access Procedure

1. Press the clear modes key.
2. Enter "107".
3. Hold down the clear/stop key for more than 3 seconds until the service program index menu appears on the touch panel display.

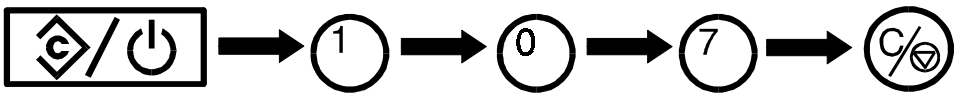

4. Touch a number [A] on the display to access the desired function. This copier has 9 service program modes.

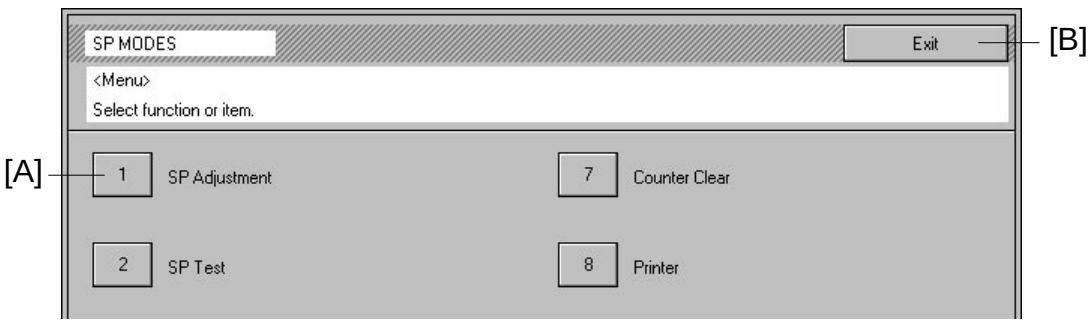

1.1.2 To Exit SP Mode

1. Touch the Exit key [B].

1.1.3 To Return to the Index Menu

1. Return to the index menu by touching Index [A] on the display.



1.1.4 Change the Menu Screen

1. To move to the next page, touch Next [B].
2. To move to the previous page, touch Prev. [C].

1.1.5 To Make a Copy While in SP Mode

1. Touch Copy in SP [D] to access "Copy in SP" mode. The LCD is as shown below.
2. Select the appropriate copy mode and make trial copies.
3. Return to the SP mode by pressing SP mode [E].

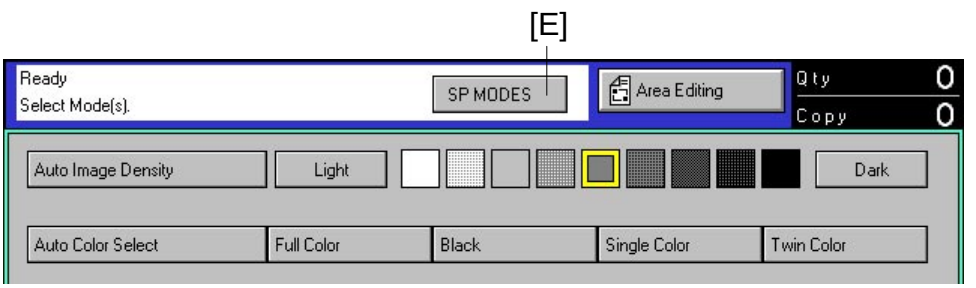

1.1.6 To Input Settings

If [+] and [−] keys [A] are displayed as shown, touch the [+] key or [−] key to change the setting. In this case, the default setting is 00.

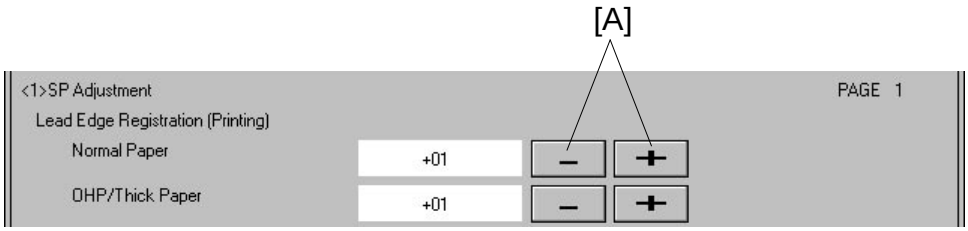

If the keys display numbers, as shown:

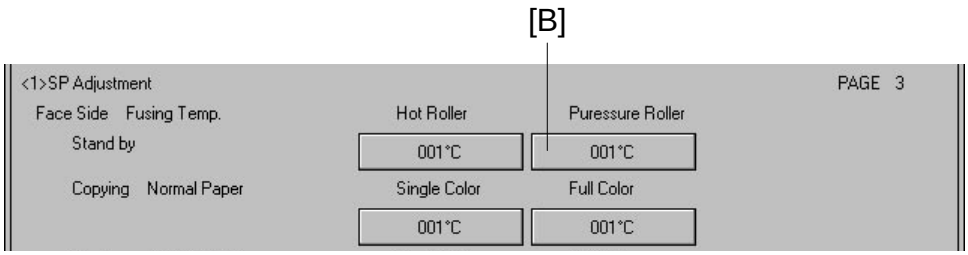

1) Touch the key [B]. Its color will change.
2) Input the setting with the numeric keys.
3) Touch the key [B] again to store the setting.

NOTE: If you forget to touch key [B] again, the setting will not be changed.

1.1.7 To Clear the Counters

1. Touch the clear key [C].
2. To clear the counter, touch the [Yes] key [D].
   To cancel without clearing the counter, touch the [No] key [E].

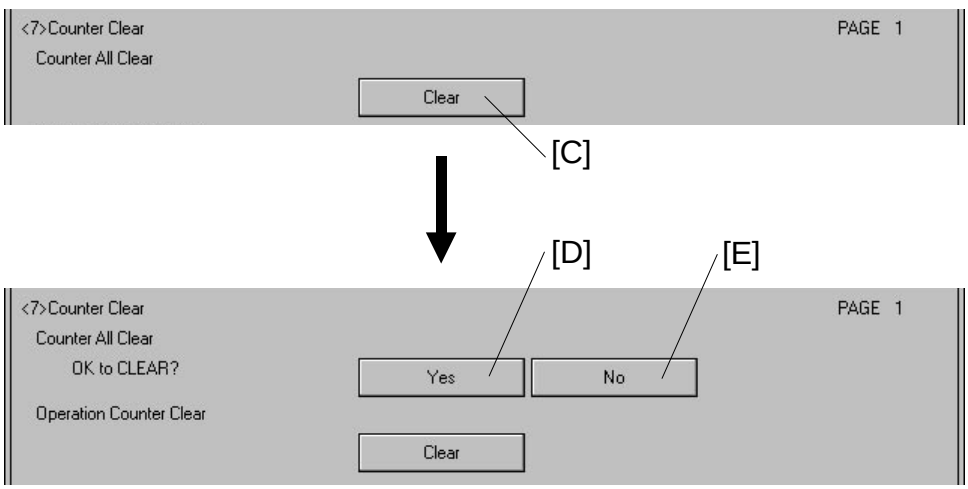

Service Tables

1.2 SERVICE PROGRAM MODE TABLE

NOTE:
- Shaded items should not be adjusted in the field.
- Items written in ***bold italic letters*** are newly added service programs to the base copier (DFC-Alpha).
- The SP mode screens are sample ones. The values in these screens are not realistic.
  Refer to the Default in Note column or the factory data sheet coming with the machine for the realistic values.

1.2.1 [1] SP ADJUSTMENT

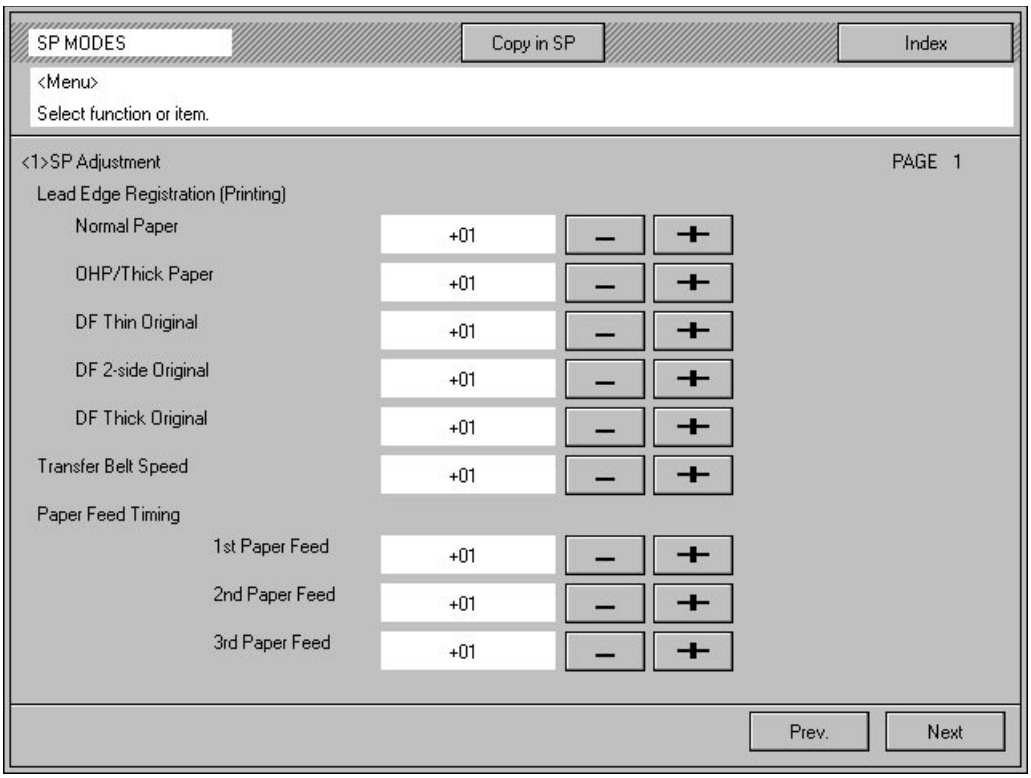

Page	Item	Function	Note
<1> -1	Lead Edge Registration (Printing)	Shifts the vertical image position by changing the ON timing of the registration clutch. (0.5 mm/step) * Normal paper: Transfer belt speed = 180 mm/s * OHP/Thick Paper: Transfer belt speed = 90 mm/s **** DF Thin Original:*** Adjusts the one-sided original's stop position without moving the original in reverse against the left scale. **** DF 2-side Original:*** Adjusts the two-sided original's stop position against the left scale after inversion. **** DF Thick Original:*** Adjusts the one-sided original's stop position after moving the original in reverse against the left scale.	Evaluate the width of the blank area at the leading edge of the test pattern image. (Use trimming area mode in test mode, page 2.) Adjustment standard: 0 ± 2 mm (2 ± 2 mm in Trimming area mode) For the following adjustment, the dip switches of the DJF should be in the Normal position. Enter the standard copy screen by pressing the "Copy in SP" key, select a suitable mode, feed the original from the DJF original tray by pressing the "Start" key, then check the original stop position by opening the DJF. **** DF Thin Original: 1-sided*** The thin original mode should be selected with user tools. [–]: Towards the left scale [+]: Away from the left scale **** DF 2-side Original*** Duplex mode (2S → 1S) should be selected for this adjustment. Overlap amount with the left scale: [–] Increase, [+] Decrease **** DF Thick Original:*** The thick original mode should be selected with user tools. Overlap with the left scale: [–] Increase, [+] Decrease
	Transfer Belt Speed	Changes the transfer belt rotation speed (0.19%/step)	Default: 0 **Do not change the setting in the field**
	Paper Feed Timing	Changes the paper feed clutch on time for each paper feed station to adjust the paper buckle at the registration rollers. (0.1 mm/step)	Adjustable range: –9.9 ~ 9.9 mm

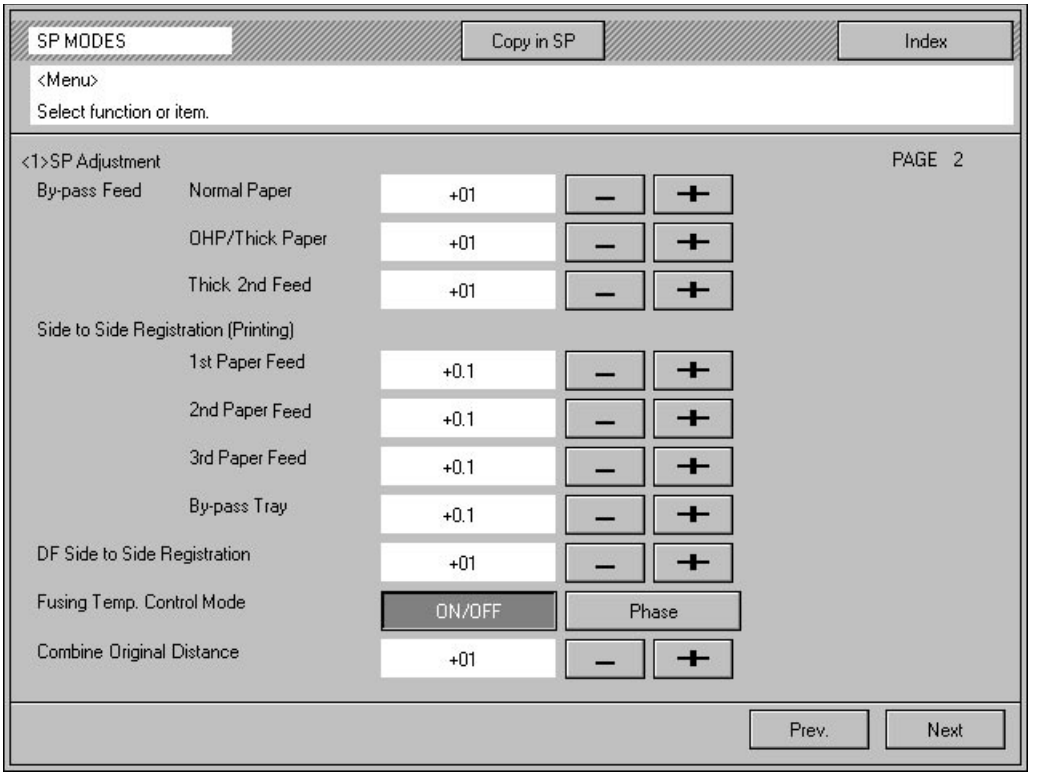
SP MODES
Copy in SP
Index
<Menu>
Select function or item.
<1>SP Adjustment
PAGE 2
By-pass Feed
Normal Paper
+01
OHP/Thick Paper
+01
Thick 2nd Feed
+01
Side to Side Registration (Printing)
1st Paper Feed
+0.1
2nd Paper Feed
+0.1
3rd Paper Feed
+0.1
By-pass Tray
+0.1
DF Side to Side Registration
+01
Fusing Temp. Control Mode
ON/OFF
Phase
Combine Original Distance
+01
Prev.
Next

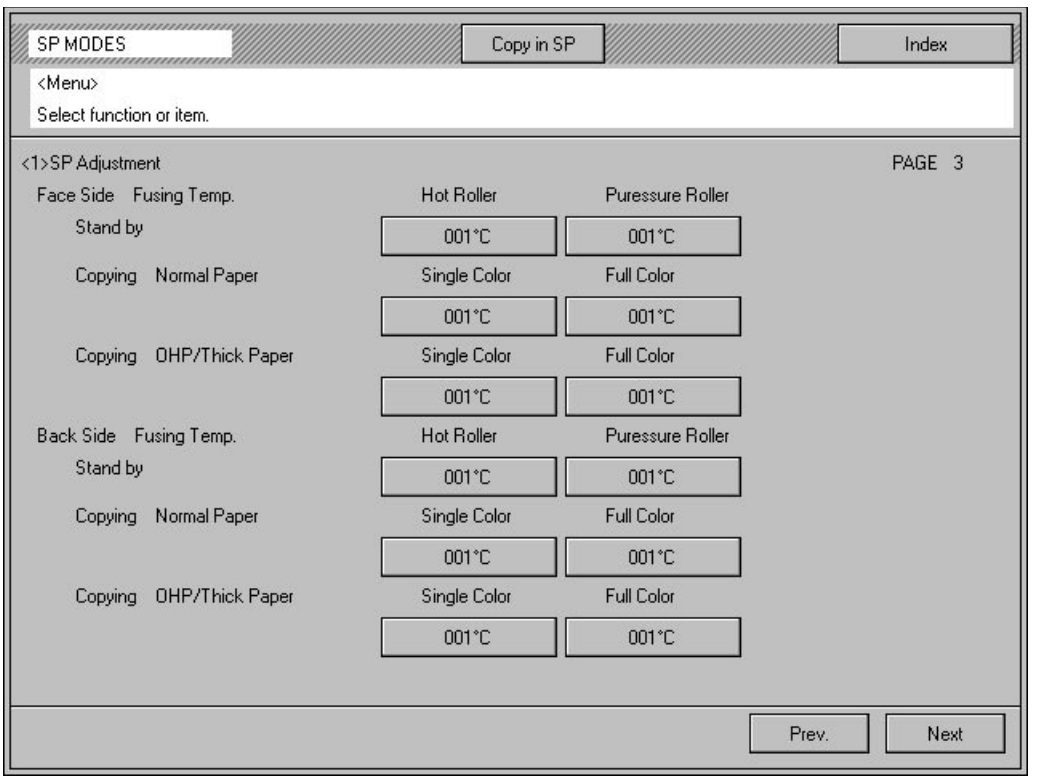
SP MODES
Copy in SP
Index
<Menu>
Select function or item.
<1>SP Adjustment
PAGE 3
Face Side Fusing Temp.
Hot Roller
Puressure Roller
Stand by
001°C
001°C
Copying Normal Paper
Single Color
Full Color
001°C
001°C
Copying OHP/Thick Paper
Single Color
Full Color
001°C
001°C
Back Side Fusing Temp.
Hot Roller
Puressure Roller
Stand by
001°C
001°C
Copying Normal Paper
Single Color
Full Color
001°C
001°C
Copying OHP/Thick Paper
Single Color
Full Color
001°C
001°C
Prev.
Next

Page	Item	Function	Note
<1> -2	By-pass Feed	*** Normal Paper** and *** OHP/Thick Paper** Changes the by-pass feed clutch on time for each paper kind to adjust the paper buckle at the registration rollers. (0.1 mm/step) *** Thick 2nd Feed** Adjusts the by-pass feed clutch ON timing for the 2nd time to ensure thick paper feeding from the registration rollers. (20 msec./step)	For by-pass feed, there are adjustments for normal paper, OHP, and thick paper mode. Adjustable range: –9.9 ~ 9.9 mm **Thick 2nd Feed** Default: 0 When the data is "0", the by-pass feed clutch turns on at the same time as the registration clutch. Increasing 1 step makes the on timing 20 msec. earlier. The off timing is fixed wich is the same as the pick-up solenoid.
	Side to Side Registration (Printing)	Adjusts the horizontal registration for the scanned image by adjusting the laser exposure start timing (0.1 mm/step)	Adjustable range: –9.9 ~ 9.9 mm
	DF Side to Side Registration	Adjusts the horizontal image position by changing the main scanning start position in DJF mode.	This adjustment should be done after the above adjustment "Side to Side Registration (Printing)" for each feeding station.
	Fusing Temp. Control Mode	Selects the fusing temperature control mode.	Default: ON/OFF control
	Combined Original Distance	Adjusts the distance between the two originals in Combine Originals mode.	Default: 0 Adjustment range: –15 ~ +15
<1> -3	Face Side Fusing Temp.	Adjusts the target temperature of the hot roller and the pressure roller in stand-by mode. Adjusts the hot roller's target temperature for copying normal and OHP/Thick paper. This is for the single side copy mode.	Default: Stand-by Hot roller: 180°C Pressure roller: 120°C Copying normal paper Single color: 160°C Full color: 170°C Copying OHP/Thick paper Single color: 170°C Full color: 170°C
	Back Side Fusing Temp.	Adjusts the target temperature of the hot roller and the pressure roller in stand-by mode. Adjusts the hot roller's target temperature for copying normal and OHP/Thick paper This is for the back side copy in the manual duplex mode.	Default: Stand-by Hot roller: 180°C Pressure roller: 120°C Copying normal paper Single color: 160°C Full color: 170°C Copying OHP/Thick paper Single color: 170°C Full color: 170°C

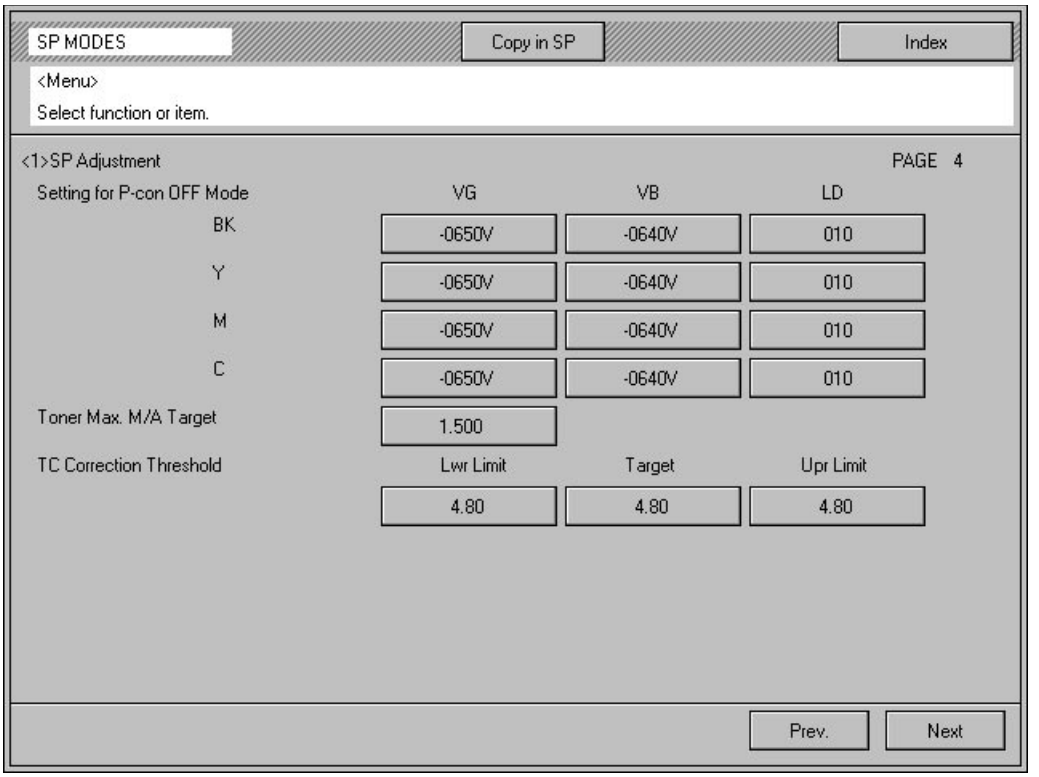
SP MODES
Copy in SP
Index
<Menu>
Select function or item.
<1>SP Adjustment
PAGE 4
Setting for P-con OFF Mode
VG
VB
LD
BK
-0650V
-0640V
010
Y
-0650V
-0640V
010
M
-0650V
-0640V
010
C
-0650V
-0640V
010
Toner Max. M/A Target
1.500
TC Correction Threshold
Lwr Limit
Target
Upr Limit
4.80
4.80
4.80
Prev.
Next

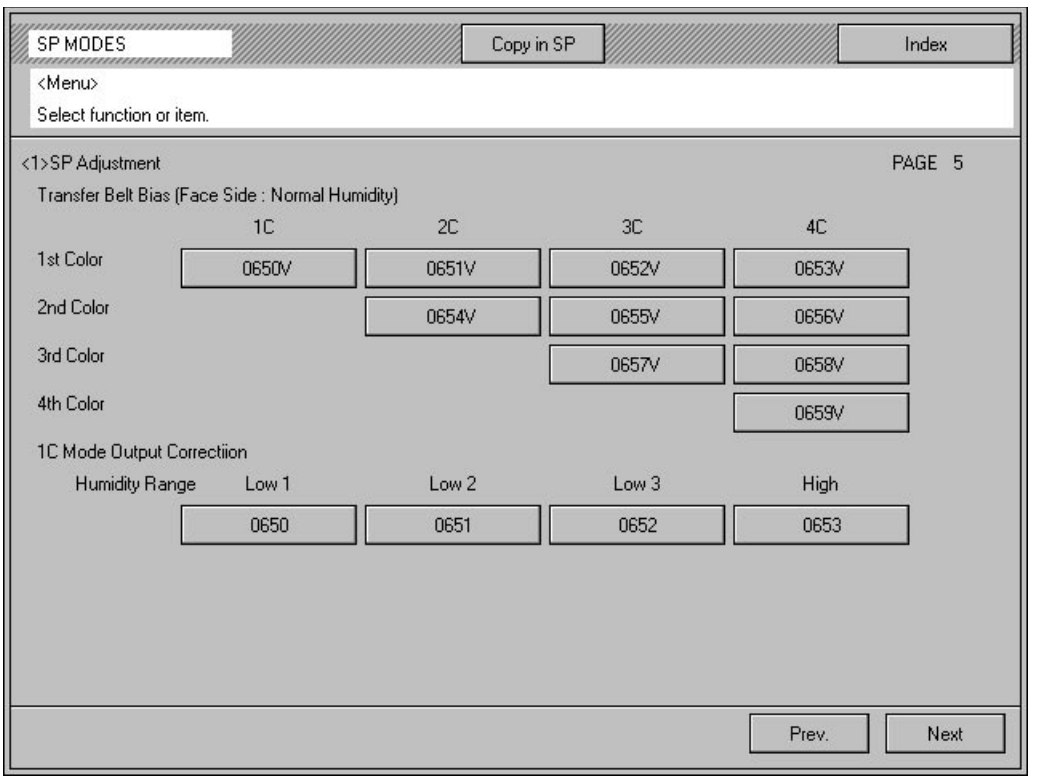
SP MODES
Copy in SP
Index
<Menu>
Select function or item.
<1>SP Adjustment
PAGE 5
Transfer Belt Bias (Face Side : Normal Humidity)
1C
2C
3C
4C
1st Color
0650V
0651V
0652V
0653V
2nd Color
0654V
0655V
0656V
3rd Color
0657V
0658V
4th Color
0659V
1C Mode Output Correctiion
Humidity Range
Low 1
Low 2
Low 3
High
0650
0651
0652
0653
Prev.
Next

Page	Item	Function	Note
<1> -4	Setting P-con OFF Mode	Factory use only	**Do not adjust in the field.** Default:(for all the colors) VG: 650 V VB: 495 V ILD: 128
	Toner Max. M/A Target	Sets the maximum toner amount on the gradation patterns in the process control self check.	**Do not adjust in the field.** Default: 1.000 (= 1 mg/cm^2)
	TC Correction Threshold	Sets the threshold for the Vcnt correction.	**Do not adjust in the field.** Default: Upper limit: 3.8 Target: 3.5 Lower limit: 2.3
<1> -5	Transfer Belt Bias (Face Side: Normal Humidity)	Adjusts the transfer belt bias voltage for each transfer process in single side copy mode with normal humidity.	**Do not adjust in the field.** Default: 1C: 1410 2C: 1490 3C: 1575 4C: 1660 Adjustable range: 50 ~ 4000 V
	1C Mode Output Correction	Adjusts the 1C transfer belt bias voltage for unusual humidity ranges. This is for single side copy mode.	**Do not adjust in the field.** Default: Low 1: 2075 Low 2: 1740 Low 3: 1740 High: 1410

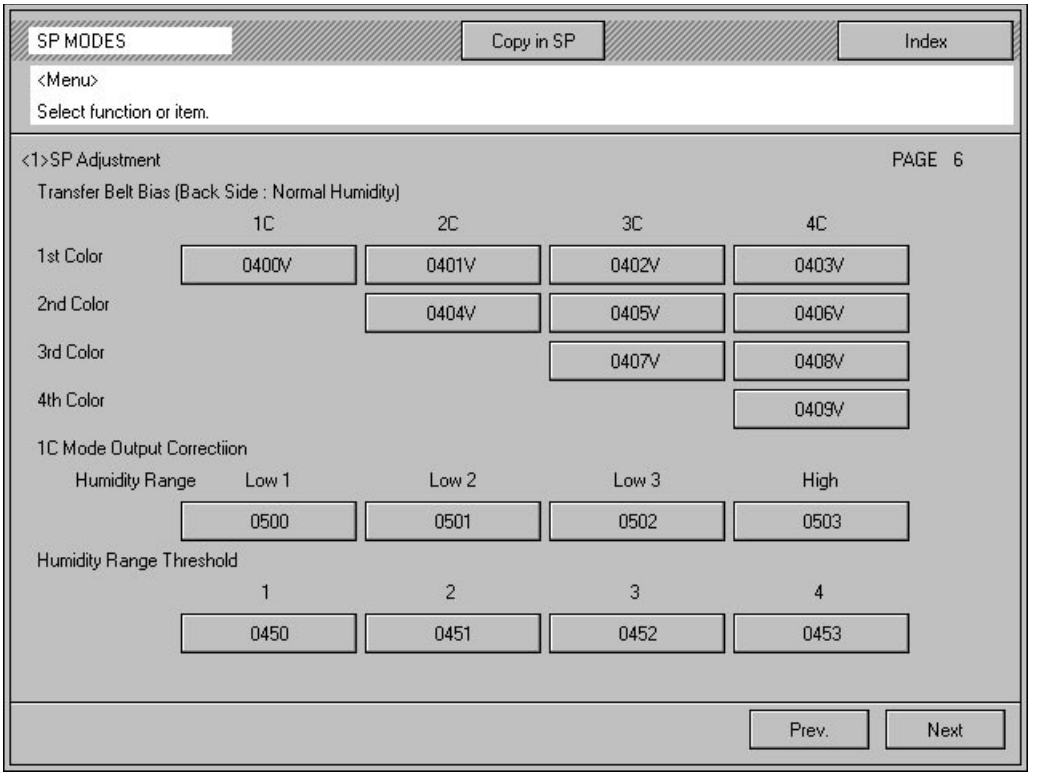
SP MODES
Copy in SP
Index
<Menu>
Select function or item.
<1>SP Adjustment
PAGE 6
Transfer Belt Bias (Back Side : Normal Humidity)
1C
2C
3C
4C
1st Color
0400V
0401V
0402V
0403V
2nd Color
0404V
0405V
0406V
3rd Color
0407V
0408V
4th Color
0409V
1C Mode Output Correctiion
Humidity Range
Low 1
Low 2
Low 3
High
0500
0501
0502
0503
Humidity Range Threshold
1
2
3
4
0450
0451
0452
0453
Prev.
Next

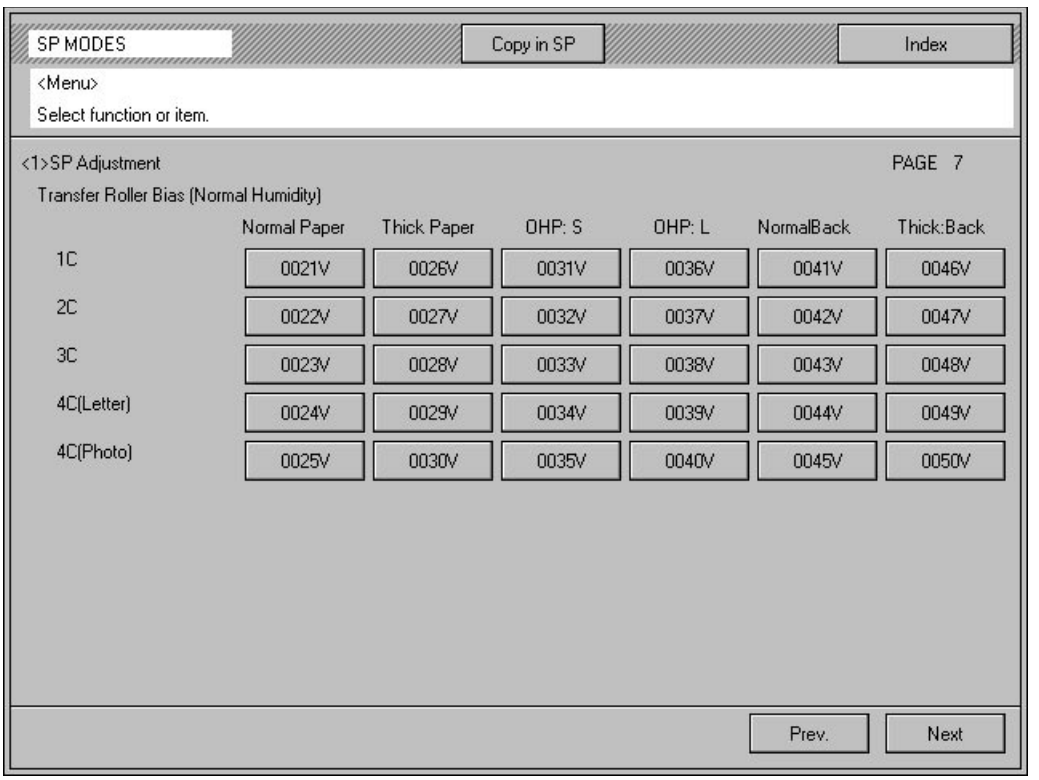
SP MODES
Copy in SP
Index
<Menu>
Select function or item.
<1>SP Adjustment
PAGE 7
Transfer Roller Bias (Normal Humidity)
Normal Paper
Thick Paper
OHP: S
OHP: L
NormalBack
Thick:Back
1C
0021V
0026V
0031V
0036V
0041V
0046V
2C
0022V
0027V
0032V
0037V
0042V
0047V
3C
0023V
0028V
0033V
0038V
0043V
0048V
4C(Letter)
0024V
0029V
0034V
0039V
0044V
0049V
4C(Photo)
0025V
0030V
0035V
0040V
0045V
0050V
Prev.
Next

Page	Item	Function	Note
<1> -6	***Transfer Belt Bias (Back Side: Normal Humidity)***	Adjusts the transfer belt bias voltage for each transfer process of the back side copy in the manual duplex mode with normal humidity.	**Do not adjust in the field.** Default: 1C: 1410 2C: 1490 3C: 1575 4C: 1660 Adjustable range: 50 ~ 4000 V
	1C Mode Output Correction	Adjusts the 1C transfer belt bias voltage for unusual humidity ranges. These are for the back side copy in the manual duplex mode.	**Do not adjust in the field.** Default: Low 1: 2075 Low 2: 1740 Low 3: 1740 High: 1410
	Humidity Range Threshold	Sets the threshold of the humidity ranges for the transfer belt bias and roller bias.	**Do not adjust in the field.** Default: 1: 43 2: 85 3: 113 4: 215
<1> -7	Transfer Roller Bias (Normal Humidity)	Adjusts the transfer roller bias voltage for each transfer process (1C ~ 4C) and the paper modes (Normal, Thick, OHP: S, OHP: L, Normal: Back, and Thick: Back).	**Do not adjust in the field.** Adjustable range: 500 ~ 4000 V Default: Normal Paper 1C: 1200 2C: 1500 3C: 1800 4C-L&P: 1500 Thick Paper 1C: 1100 2C: 1360 3C: 1640 4C-L&P: 1360 OHP: S&L 1C: 2020 2C: 2080 3C: 2370 4C-L&P: 2080 Normal: Back 1C: 1200 2C: 1700 3C: 1980 4C-L&P: 1700 Thick: Back 1C: 1360 2C: 1640 3C: 1930 4C-L&P: 1640

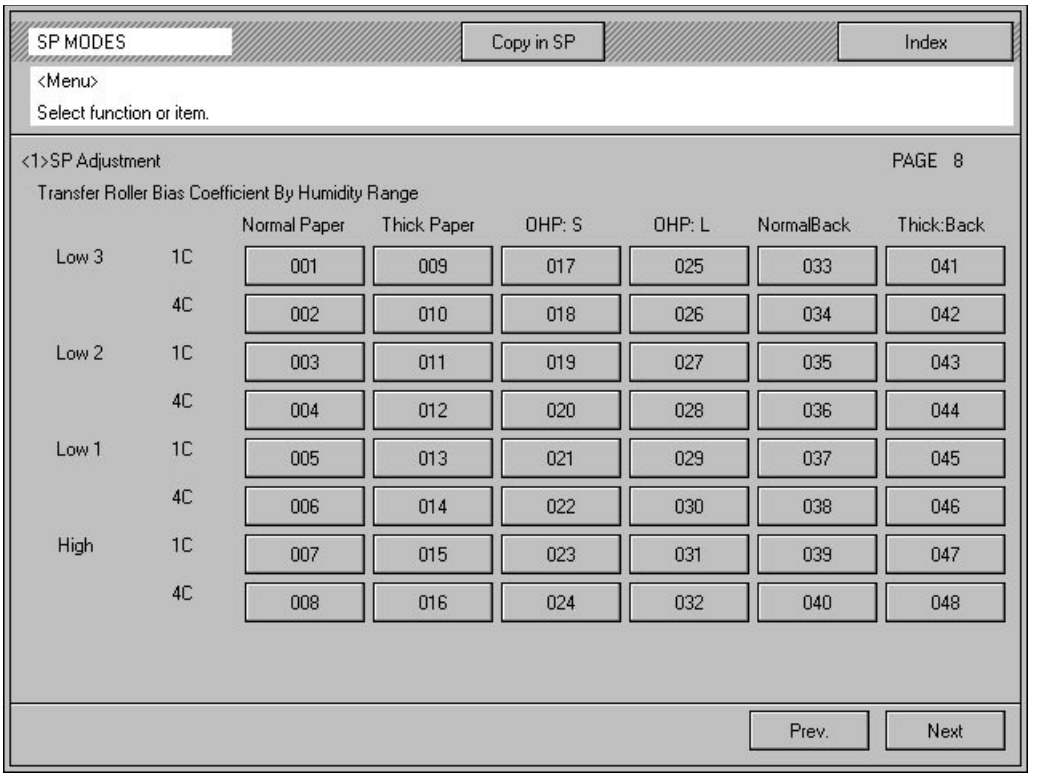
SP MODES
Copy in SP
Index
<Menu>
Select function or item.
<1>SP Adjustment
PAGE 8
Transfer Roller Bias Coefficient By Humidity Range
Normal Paper
Thick Paper
OHP: S
OHP: L
NormalBack
Thick:Back
Low 3
1C
001
009
017
025
033
041
4C
002
010
018
026
034
042
Low 2
1C
003
011
019
027
035
043
4C
004
012
020
028
036
044
Low 1
1C
005
013
021
029
037
045
4C
006
014
022
030
038
046
High
1C
007
015
023
031
039
047
4C
008
016
024
032
040
048
Prev.
Next

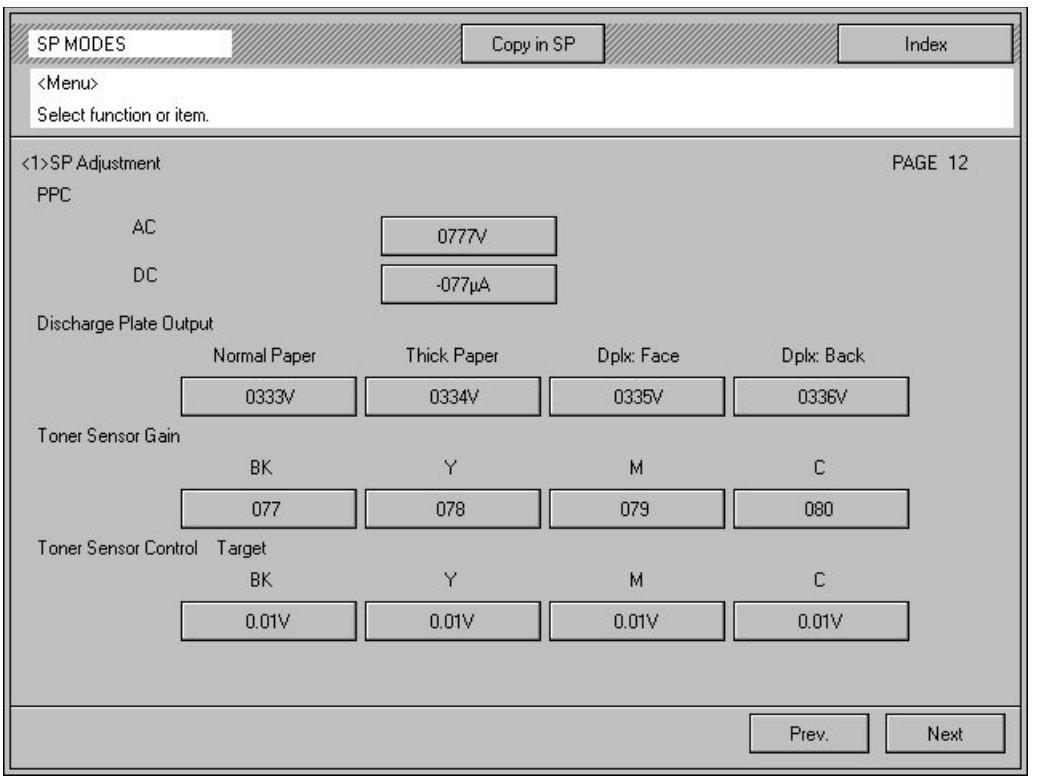
SP MODES
Copy in SP
Index
<Menu>
Select function or item.
<1>SP Adjustment
PAGE 12
PPC
AC
0777V
DC
-077µA
Discharge Plate Output
Normal Paper
Thick Paper
Dplx: Face
Dplx: Back
0333V
0334V
0335V
0336V
Toner Sensor Gain
BK
Y
M
C
077
078
079
080
Toner Sensor Control Target
BK
Y
M
C
0.01V
0.01V
0.01V
0.01V
Prev.
Next

Page	Item	Function	Note
<1> -8	***Transfer Roller Bias Coefficient By Humidity Range***	Sets the coefficient (%) for the transfer roller bias (normal humidity) for other humidity ranges.	**Do not adjust in the field.** Adjustable range: 0 ~ 255
		Default: **Normal Paper** Low3 1C: 108 / 4C: 113 Low2 1C: 121 / 4C: 122 Low1 1C: 133 / 4C: 139 High 1C: 77 / 4C: 71 **Thick Paper** Low3 1C: 109 / 4C: 103 Low2 1C: 116 / 4C: 110 Low1 1C: 127 / 4C: 118 High 1C: 84 / 4C: 71 **OHP-S** Low3 1C: 98 / 4C: 97 Low2 1C: 98 / 4C: 95 Low1 1C: 98 / 4C: 95 High 1C: 93 / 4C: 97 **OHP-L** Low3 1C: 98 / 4C: 100 Low2 1C: 98 / 4C: 97 Low1 1C: 98 / 4C: 97 High 1C: 95 / 4C: 100 **Normal - Back** Low3 1C: 117 / 4C: 108 Low2 1C: 138 / 4C: 116 Low1 1C: 157 / 4C: 128 High 1C: 84 / 4C: 71 **Thick - Back** Low3 1C: 110 / 4C: 108 Low2 1C: 118 / 4C: 115 Low1 1C: 131 / 4C: 127 High 1C: 68 / 4C: 70	
<1> -12	PCC	Selects the PCC ac (V) and dc (μA) output.	Default: AC: 3180 V DC: –40 μA Adjustable range: AC: 2800 ~ 3800 V DC: –10 ~ –140 μA
	Discharge Plate Output	Adjusts the output voltage of the discharge plate for each paper mode.	**Do not change the setting in the field.** Default: Normal paper: 4000 V Thick paper: 3500 V Duplex: Face: 4000 V Duplex: Back: 4000 V
	Toner Sensor Gain	Manually changes the TD sensor gain data (VCNT Gain) determined during the developer's initial setting.	**Do not adjust in the field.**
	Toner Sensor Control Target	Manually changes the target voltage of the TD sensor output (VREF) during the developer's initial setting.	Default: 2.5 V (Bk, Y, M, C) Adjustable range: 0 ~ 5.0 V **Do not adjust in the field.**

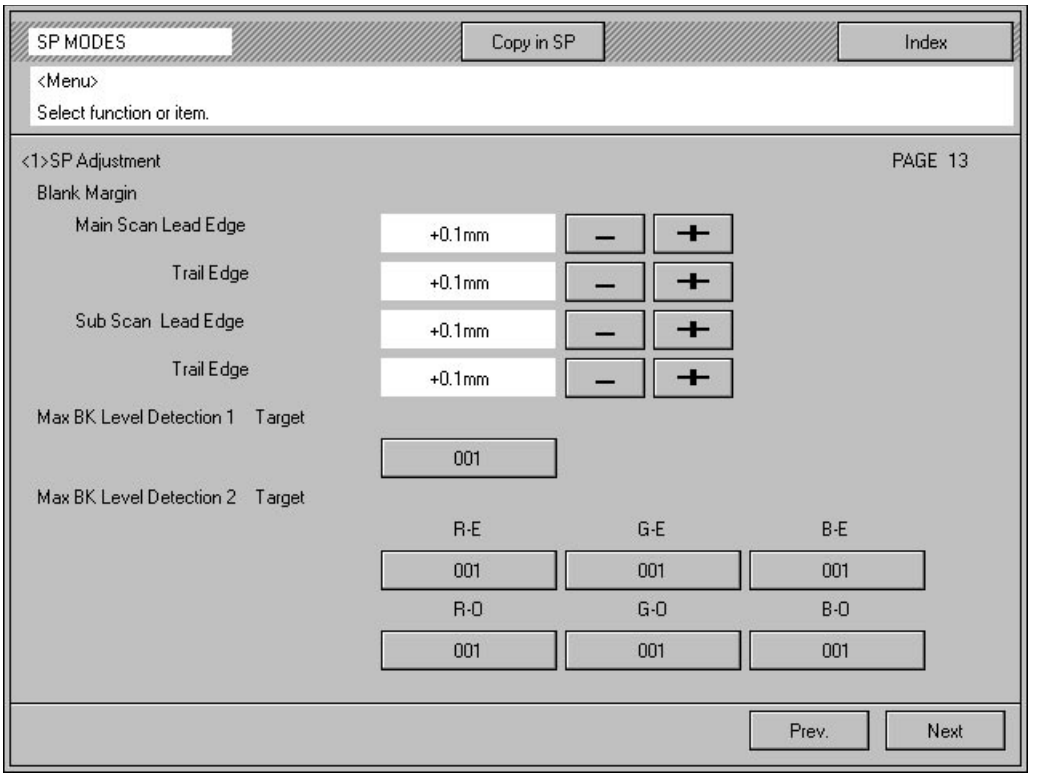
SP MODES
Copy in SP
Index
<Menu>
Select function or item.
<1>SP Adjustment
PAGE 13
Blank Margin
Main Scan Lead Edge
+0.1mm
Trail Edge
+0.1mm
Sub Scan Lead Edge
+0.1mm
Trail Edge
+0.1mm
Max BK Level Detection 1 Target
001
Max BK Level Detection 2 Target
R-E
G-E
B-E
001
001
001
R-O
G-O
B-O
001
001
001
Prev.
Next

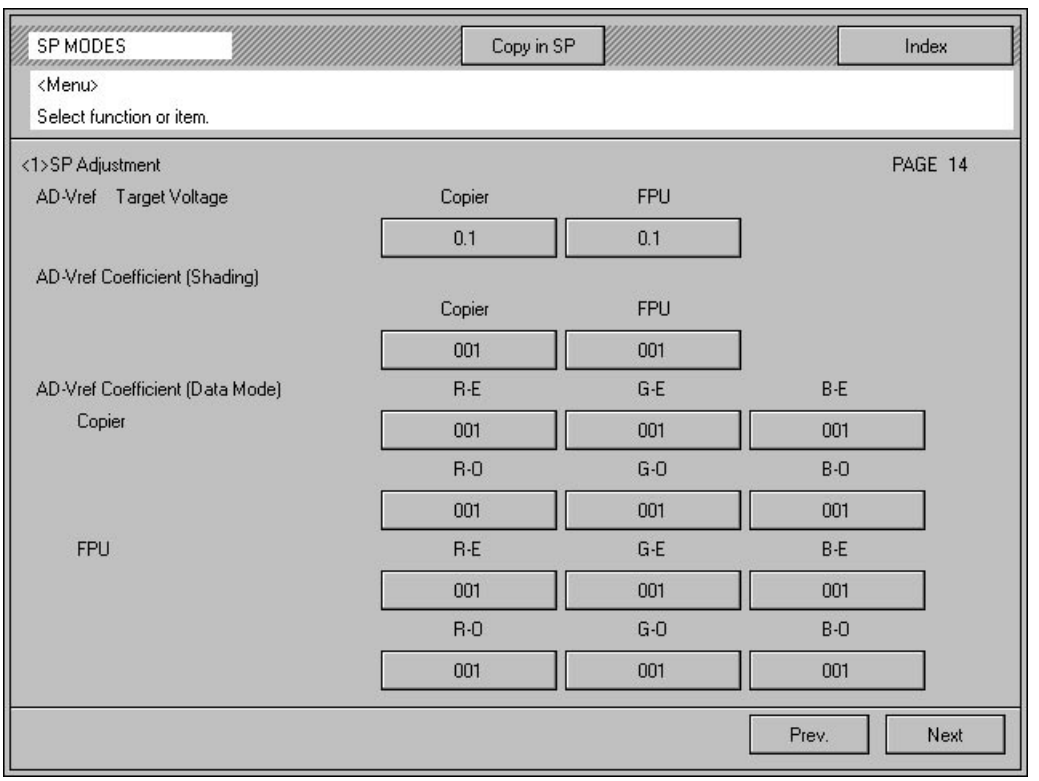
SP MODES
Copy in SP
Index
<Menu>
Select function or item.
<1>SP Adjustment
PAGE 14
AD-Vref Target Voltage
Copier
FPU
0.1
0.1
AD-Vref Coefficient (Shading)
Copier
FPU
001
001
AD-Vref Coefficient (Data Mode)
R-E
G-E
B-E
Copier
001
001
001
R-O
G-O
B-O
001
001
001
FPU
R-E
G-E
B-E
001
001
001
R-O
G-O
B-O
001
001
001
Prev.
Next

Page	Item	Function	Note
<1> -13	Blank Margin	Adjusts the width of the margins at the edges of the copy paper. **Main Scan Lead Edge:** Adjusts the margin at the right edge of the copy paper. **Main Scan Trail Edge:** Adjusts the margin at the left edge of the copy paper. **Sub Scan Lead Edge:** Adjusts the margin at the leading edge of the copy paper. **Sub Scan Trail Edge:** Adjusts the margin at the trailing edge of the copy paper.	Adjustable range: Right edge: –5 ~ 5 mm Left edge: –5 ~ 5 mm Lead edge: –5 ~ 5 mm Trailing edge: –5 ~ 5 mm
	Max Bk Level Detection 1 Target	Adjusts the black level target (DA1) for the AGC.	Default:8 **Do not adjust in the field.**
	Max Bk Level Detection 2 Target	Adjusts the black level target (DA2) for the AGC.	Default:4 (R-E, G-E, B-E, R-O, G-O, B-O) **Do not adjust in the field.**
<1> -14	AD-Vref Target Voltage	Selects the AD-VREF target voltage to set the exposure lamp voltage in the AGC.	Default: Copier: 2.7 FPU: 4.0 **Do not adjust in the field.**
	AD-Vref Coefficient (Shading)	Selects the AD-VREF coefficient to prevent the overflow of white shading data.	Default data: Copier: 110 SPU: 110 **Do not adjust in the field.**
	AD-Vref Coefficient (Data Mode)	Factory use only (Gray balance adjustment)	**Do not adjust in the field.**

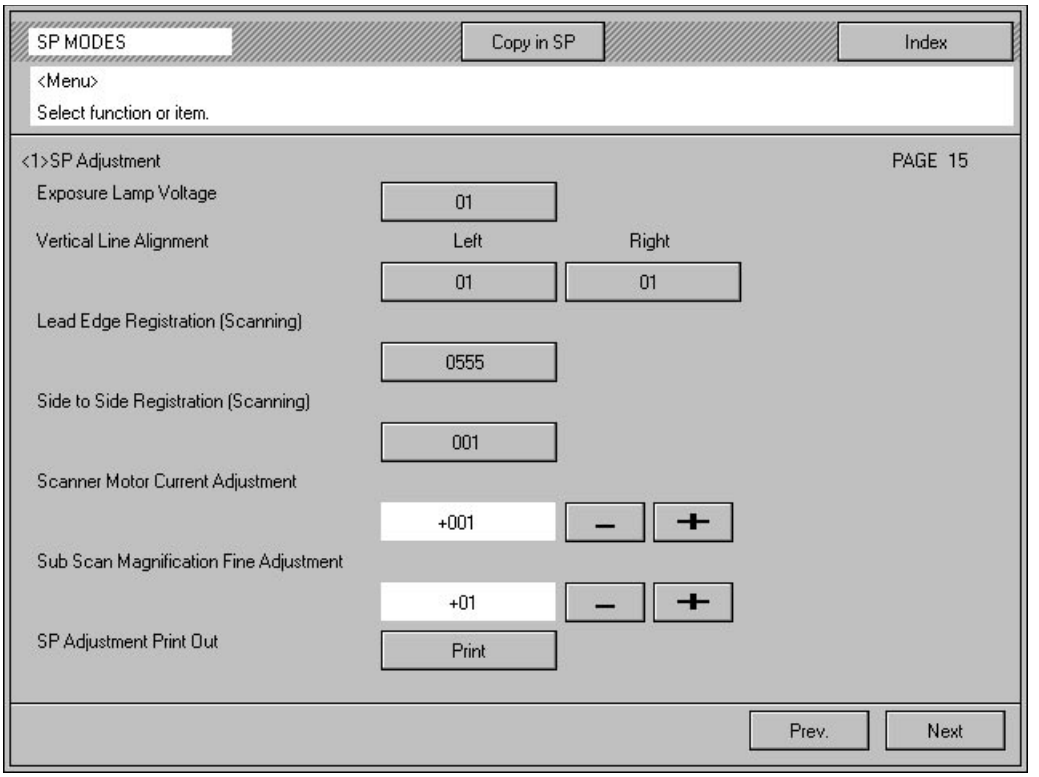
SP MODES
Copy in SP
Index
<Menu>
Select function or item.
<1>SP Adjustment
PAGE 15
Exposure Lamp Voltage
01
Vertical Line Alignment
Left
Right
01
01
Lead Edge Registration (Scanning)
0555
Side to Side Registration (Scanning)
001
Scanner Motor Current Adjustment
+001
–
+
Sub Scan Magnification Fine Adjustment
+01
–
+
SP Adjustment Print Out
Print
Prev.
Next

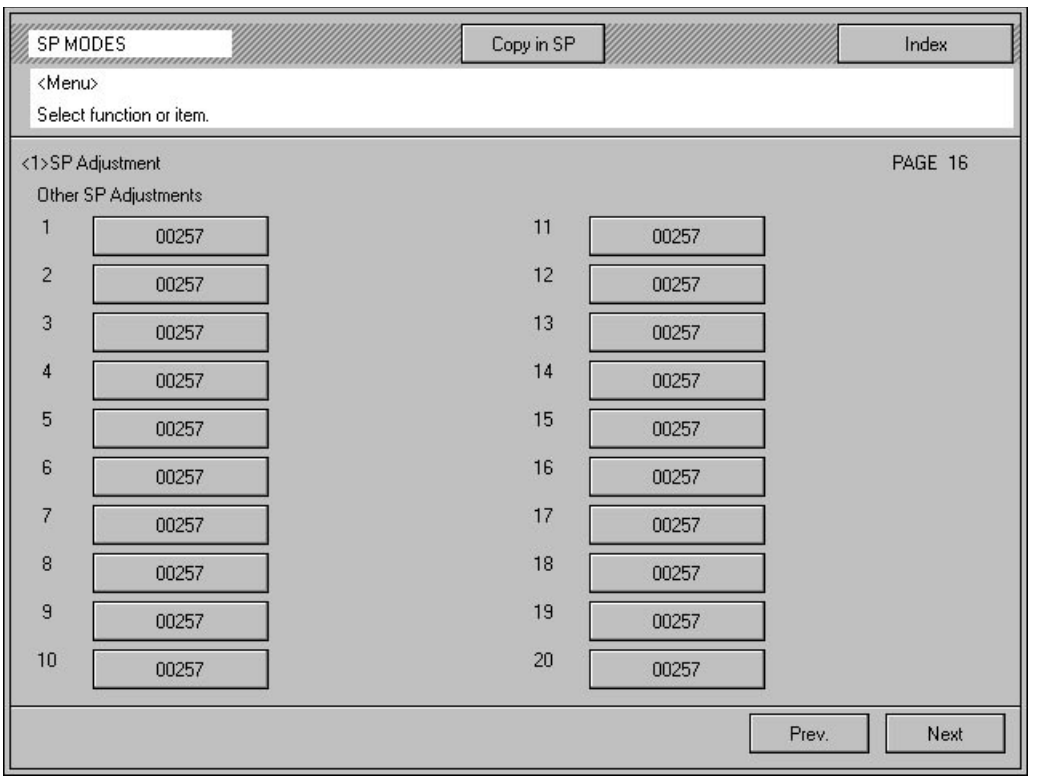
SP MODES
Copy in SP
Index
<Menu>
Select function or item.
<1>SP Adjustment
PAGE 16
Other SP Adjustments
1 00257
2 00257
3 00257
4 00257
5 00257
6 00257
7 00257
8 00257
9 00257
10 00257
11 00257
12 00257
13 00257
14 00257
15 00257
16 00257
17 00257
18 00257
19 00257
20 00257
Prev.
Next

Page	Item	Function	Note
<1> -15	Exposure Lamp Voltage	Adjusts the exposure lamp input voltage during factory adjustment. This does not influence the exposure lamp input voltage during copying.	Default: 70 V Adjustable range: 50 ~ 75 V **Do not adjust in the field.**
	Vertical Line Alignment	Adjusts the YMCBk vertical line alignment at the sides of copies caused by the CCD board being not positioned perpendicularly to the light axis.	If the image alignment at the left side is incorrect, change this data. If the image alignment at the right side is incorrect, change this data.
	Lead Edge Registration (Scanning)	Adjusts the vertical image position by changing the start time of image reading in the subscan direction.	Default: 75 Adjustable range: 0 ~ 4095 **Do not adjust in the field.**
	Side to Side Registration (Scanning)	Adjusts the horizontal image position by changing the start time of image reading in the main scan direction.	Default: 155 Adjustable range: 0 ~ 255 **Do not adjust in the field.**
	Scanner Motor Current Adjustment	Adjust the scanner motor speed by changing the scanner motor current.	Motor current adjustment Default: 100 Fine adjustment Default: 0 **Do not adjust in the field.**
	Sub Scan Magnification Fine Adjustment	Adjust the scanner motor speed by changing the scanner motor current.	Motor current adjustment Default: 100 Fine adjustment Default: 0 **Do not adjust in the field.**
	SP Adjustment Print Out	Prints out the SP adjustment data.	
<1> -16	***Other SP Adjustments***	Only #13 is effective. #13: Select the humidity sensor function ON or OFF.	#13 default: 0 0: Humidity sensor ON 1: Humidity sensor OFF

1.2.2 [2] SP Test

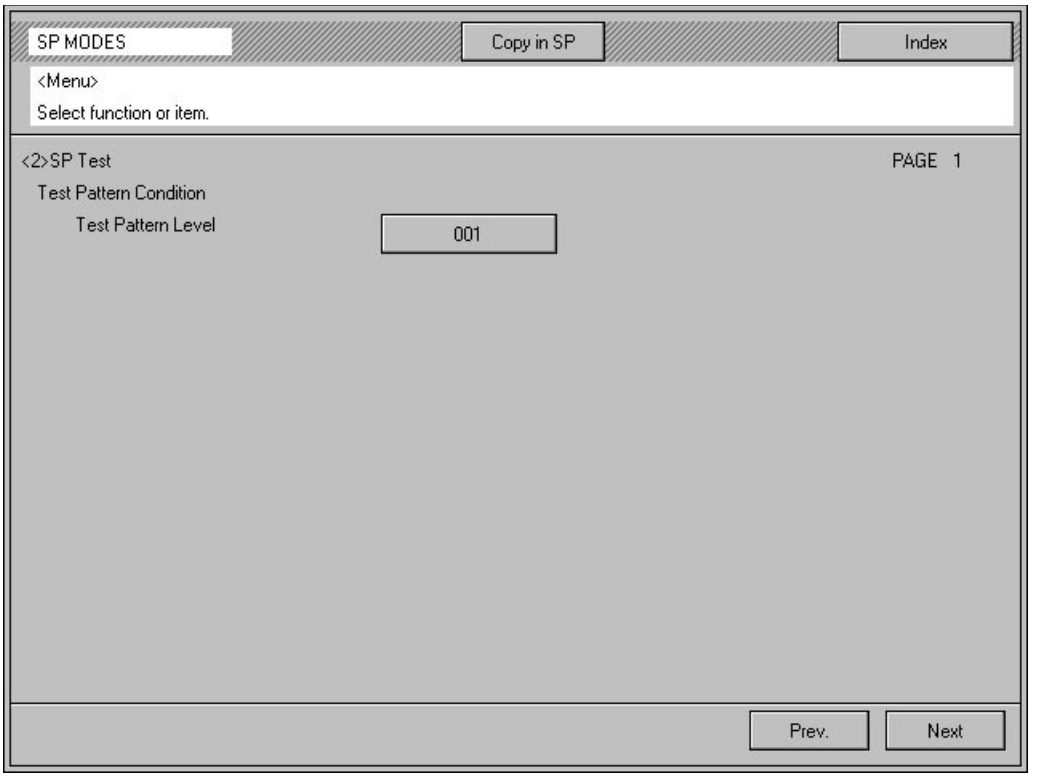
SP MODES
Copy in SP
Index
<Menu>
Select function or item.
<2>SP Test
PAGE 1
Test Pattern Condition
Test Pattern Level
001
Prev.
Next

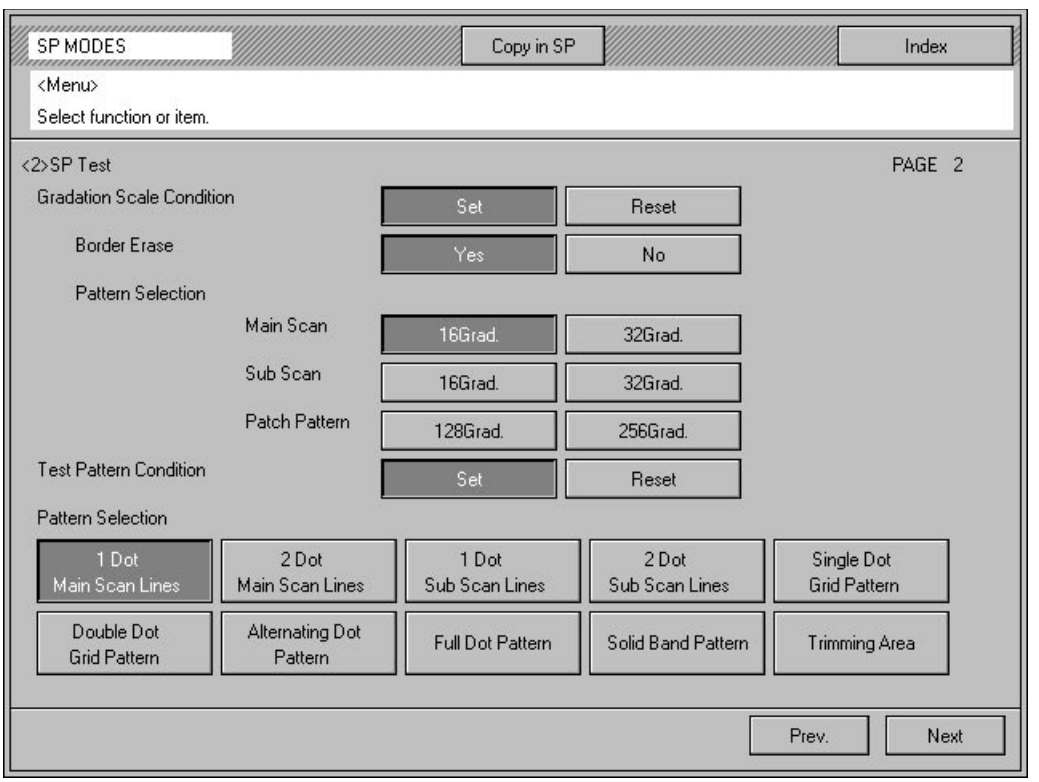
SP MODES
Copy in SP
Index
<Menu>
Select function or item.
<2>SP Test
PAGE 2
Gradation Scale Condition
Set
Reset
Border Erase
Yes
No
Pattern Selection
Main Scan
16Grad.
32Grad.
Sub Scan
16Grad.
32Grad.
Patch Pattern
128Grad.
256Grad.
Test Pattern Condition
Set
Reset
Pattern Selection
1 Dot Main Scan Lines
2 Dot Main Scan Lines
1 Dot Sub Scan Lines
2 Dot Sub Scan Lines
Single Dot Grid Pattern
Double Dot Grid Pattern
Alternating Dot Pattern
Full Dot Pattern
Solid Band Pattern
Trimming Area
Prev.
Next

Page	Item	Function	Note
<2> -1	Test Pattern Condition	Adjusts the laser power for the test pattern density for the 256 grades.	Default: 255 This function effects the test patterns in the bottom part of SP <2>-2.
<2> -2	Gradation Scale Condition	Enables the gray scale printing. ***Border Erase** Enables the creation of the white margin between the different density gray scales. ***Pattern Selection** Selects the kind of gray scales.	Default: Reset ***Border Erase** Default: No ***Pattern Selection** Access the "Copy in SP" mode and press the Start key to print the gray scales.
	Test Pattern Condition	Enables test pattern printing. ***Pattern Selection** Selects the type of test pattern.	Default: Reset If both test pattern and gradation scale are enabled, only the gradation pattern is printed. ***Pattern Selection** Access the "Copy in SP" mode and press the start key to print the test pattern.
	Pattern Selection	Selects the type of test pattern.	Access the "Copy in SP" mode and press the start key to print the test pattern.

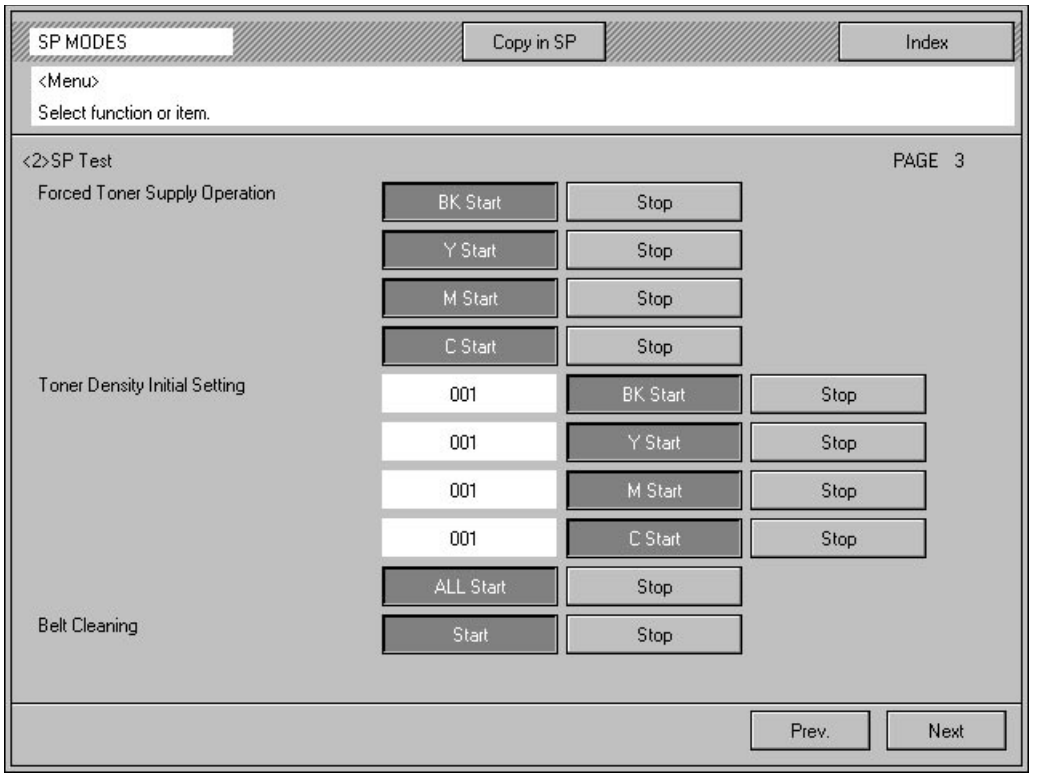
SP MODES
Copy in SP
Index
<Menu>
Select function or item.
<2>SP Test
PAGE 3
Forced Toner Supply Operation
BK Start
Stop
Y Start
Stop
M Start
Stop
C Start
Stop
Toner Density Initial Setting
001
BK Start
Stop
001
Y Start
Stop
001
M Start
Stop
001
C Start
Stop
ALL Start
Stop
Belt Cleaning
Start
Stop
Prev.
Next

Page	Item	Function	Note
<2> -3	Forced Toner Supply Operation	Factory use only	**Do not use in the field.**
	Toner Density Initial Setting	Starts and stops the toner density sensor's initial setting. Indicates the gain data of each color TD sensor. Both toner supply reference values of the TD sensor and the TD sensor gain value are set automatically when developer is replaced.	Do not make a copy with new developer before the initial developer setting. Do this without the toner tank installed. This mode is required when new developer is installed or the TD sensor is replaced. This mode automatically stops when completed.
	Belt Cleaning	Performs the transfer belt cleaning.	This mode must be performed after replacing the transfer belt. Belt cleaning automatically stops after about 10 seconds.

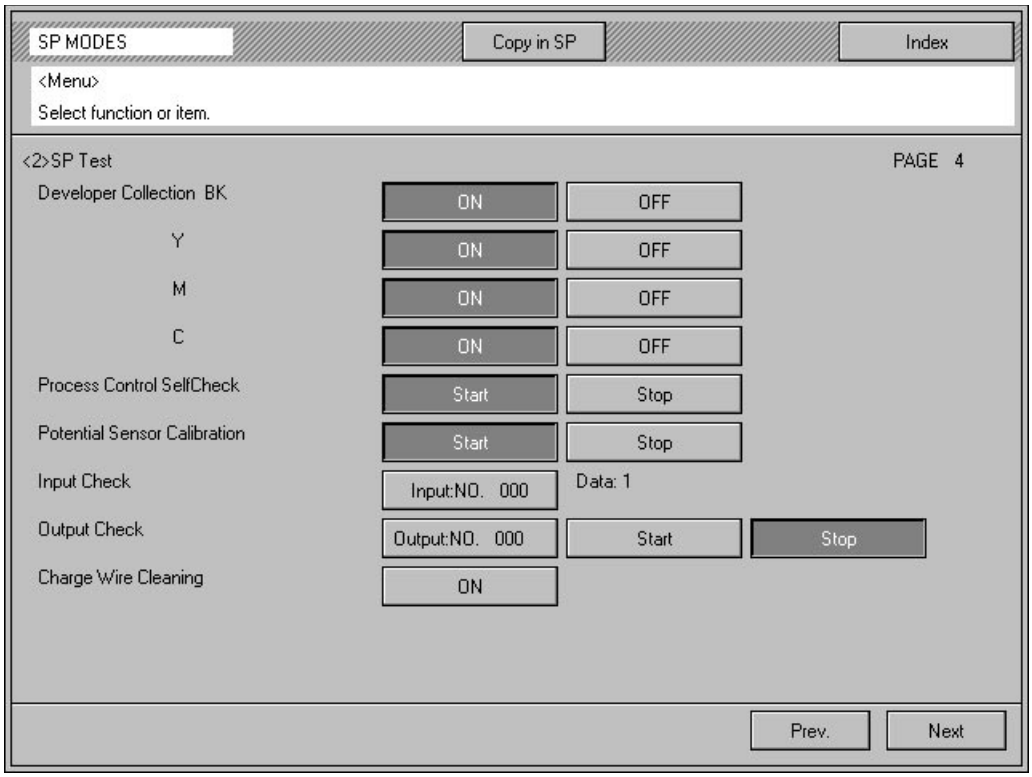
SP MODES
Copy in SP
Index
<Menu>
Select function or item.
<2>SP Test
PAGE 4
Developer Collection BK
ON
OFF
Y
ON
OFF
M
ON
OFF
C
ON
OFF
Process Control SelfCheck
Start
Stop
Potential Sensor Calibration
Start
Stop
Input Check
Input:NO. 000
Data: 1
Output Check
Output:NO. 000
Start
Stop
Charge Wire Cleaning
ON
Prev.
Next

Page	Item	Function	Note
<2> -4	Developer Collection Bk	Starts and stops the developer collection.	The Bk or color development drive motor rotates and the selected color sleeve motor rotates forwards and reverse alternatively.
	Process Control Self Check	Starts and stops the process control self check.	Perform this mode when the following parts are replaced (or cleaned) Drum potential sensor/drum/ charge corona wire, charge corona grid, and casing/lamps around the drum/developer/ RAM etc. This mode should be performed with a drum not used for more than 5 minutes. This mode automatically stops after completing.
	Potential Sensor Calibration	Starts and stops the drum potential sensor calibration.	This mode should be performed with a drum not used for more than 5 minutes. This mode automatically stops after completing.
	Input Check	Checks if the sensors or switches are correctly activated and de-activated.	Status 0 --- de-activated Status 1 --- activated
	Output Check	Checks if the motors, solenoids, clutches etc. activate and de-activate.	Access this mode as follows: 1. Touch the output mode key. 2. Enter the electrical component number by using the number keys on the operation panel. 3. Touch the output mode key. Touch the start key to activate and touch the stop key to de- activate the electrical component.
	Charge Wire Cleaning	Starts the charge corona wire/grid cleaning.	This mode automatically stops after completing. The forced process control self check must be done immediately after this.

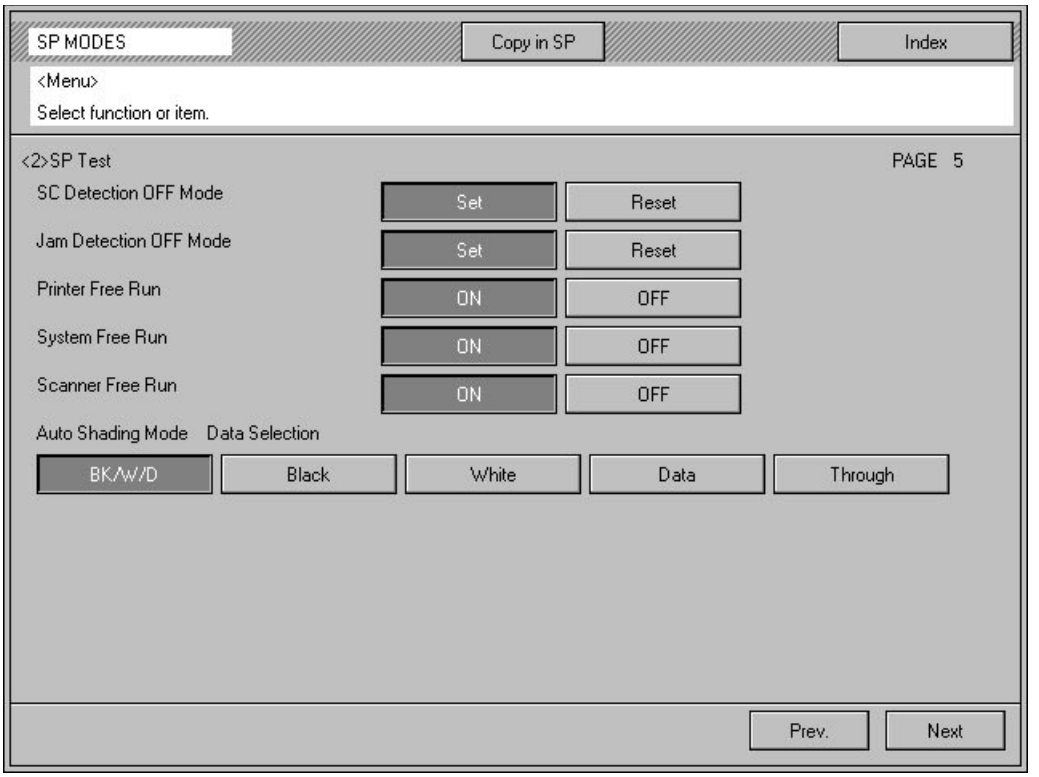
SP MODES
Copy in SP
Index
<Menu>
Select function or item.
<2>SP Test
PAGE 5
SC Detection OFF Mode
Set
Reset
Jam Detection OFF Mode
Set
Reset
Printer Free Run
ON
OFF
System Free Run
ON
OFF
Scanner Free Run
ON
OFF
Auto Shading Mode Data Selection
BK/W/D
Black
White
Data
Through
Prev.
Next

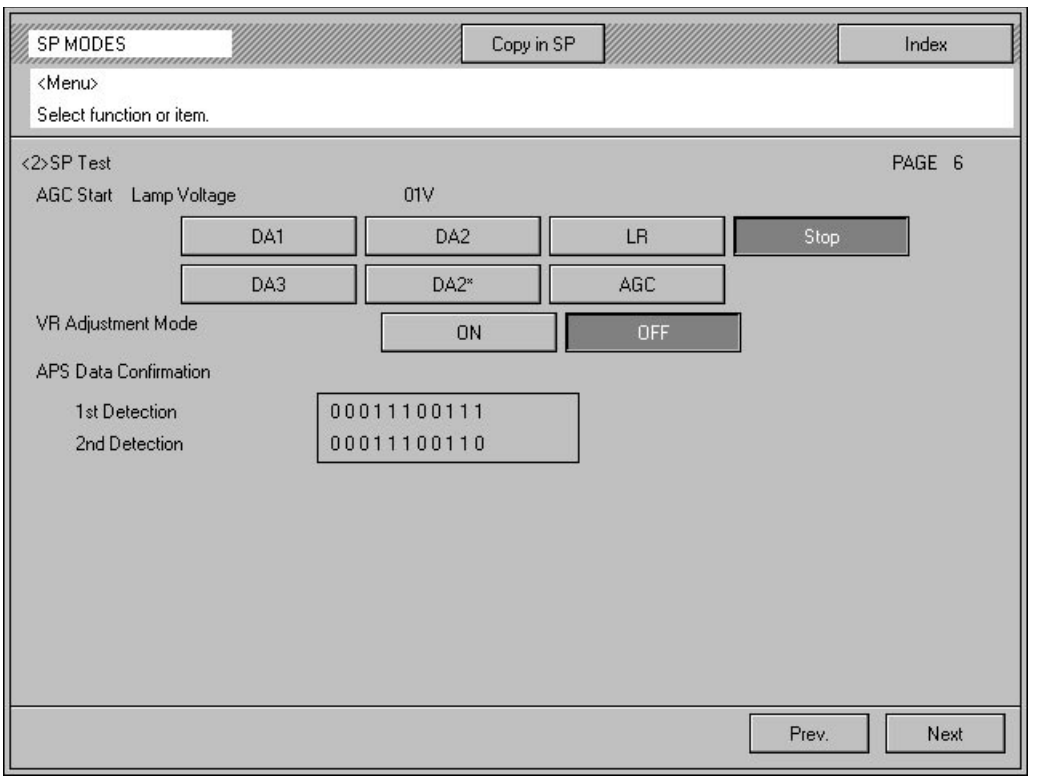
SP MODES
Copy in SP
Index
<Menu>
Select function or item.
<2>SP Test
PAGE 6
AGC Start Lamp Voltage
01V
DA1
DA2
LR
Stop
DA3
DA2*
AGC
VR Adjustment Mode
ON
OFF
APS Data Confirmation
1st Detection
00011100111
2nd Detection
00011100110
Prev.
Next

Page	Item	Function	Note
<2> -5	SC Detection OFF Mode	Disables the self-diagnostic function.	Default: Reset (enable)
	Jam Detection OFF Mode	Disables jam detection (ON check).	Default: Reset (enable)
	Printer Free Run	Starts printer free run mode.	Paper is not fed in this mode.
	System Free Run	Starts system free run mode.	Paper is not fed in this mode. When using the system free run, close the platen cover or place white paper on the exposure glass to avoid toner scattering inside the machine.
	Scanner Free Run	Starts scanner free run mode.	Paper is not fed in this mode.
	Auto Shading Mode Data Selection	Separately performs the shading compensation sequence.	Factory use only
<2> -6	AGC Start Lamp Voltage	Separately performs the auto gain control sequence.	Factory use only
	VR Adjustment Mode	Turns on the exposure lamp.	Factory use only
	APS Data Confirmation	Checks if the original size sensors are correctly activated or de-activated at the 1st and 2nd detection.	Status 0 --- de-activated Status 1 --- activated

1.2.3 [3] SP Data Output

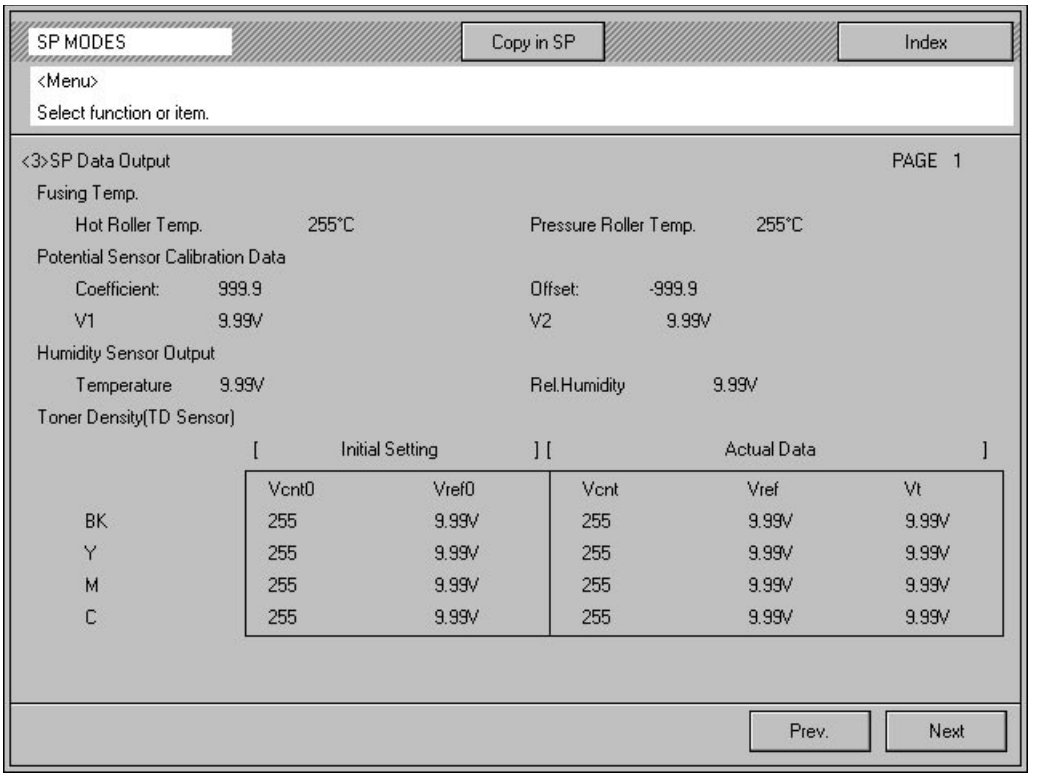

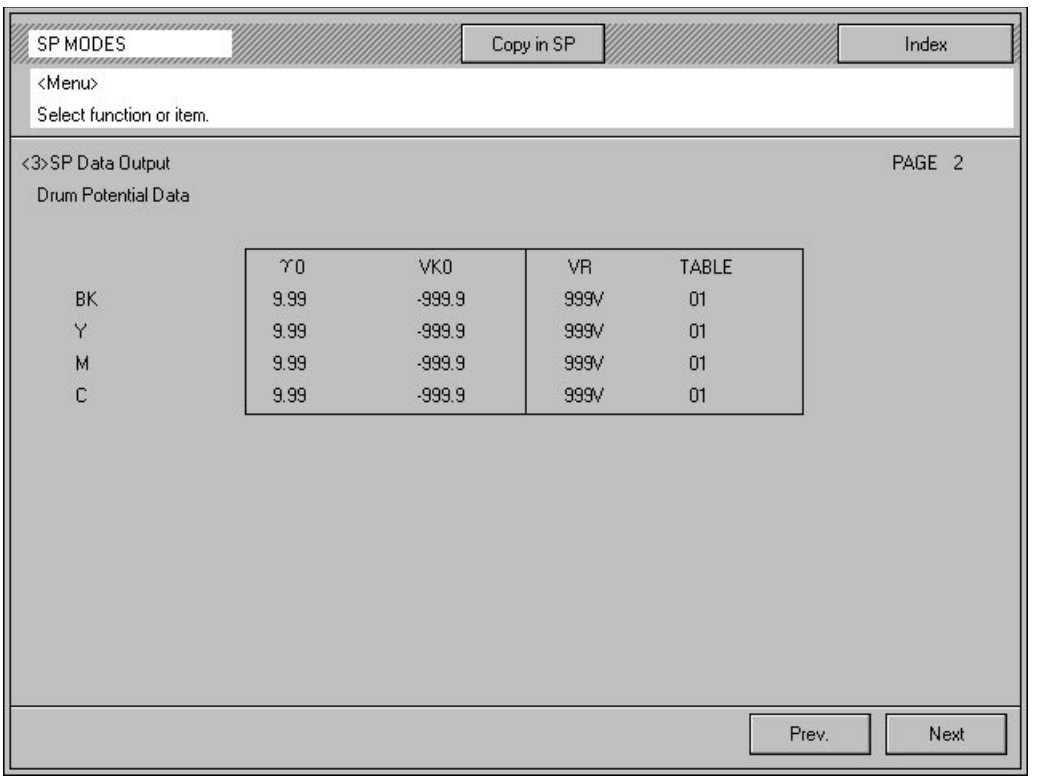

Page	Item	Function	Note
<3> -1	Fusing Temp.	Indicates the hot roller/pressure roller temperature based on the output of the thermistors.	
	Potential Sensor Calibration Data	Indicates the potential sensor calibration data.	V1: Potential sensor output at a drum potential of 300 V V2: Potential sensor output at a drum potential of 600 V
	Humidity Sensor Output	Indicates the humidity sensor output for the temperature and relative humidity.	
	Toner Density (TD Sensor)	Indicates values (V_T, V_{REF}, V_{CNT}) relating to each color toner density sensor.	
<3> -2	***Drum Potential Data***	Indicates the drum potential data and the pointer table number determined during the process control self check.	

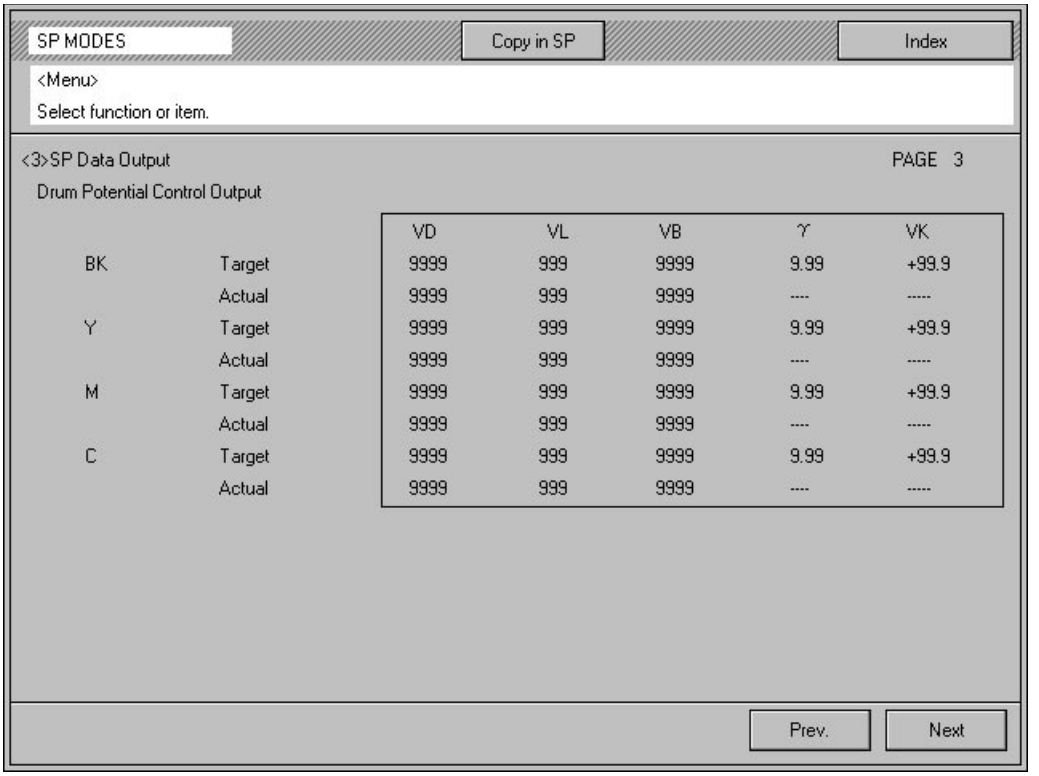
SP MODES
Copy in SP
Index
<Menu>
Select function or item.
<3>SP Data Output
PAGE 3
Drum Potential Control Output
VD VL VB γ VK
BK Target 9999 999 9999 9.99 +99.9
Actual 9999 999 9999 ---- -----
Y Target 9999 999 9999 9.99 +99.9
Actual 9999 999 9999 ---- -----
M Target 9999 999 9999 9.99 +99.9
Actual 9999 999 9999 ---- -----
C Target 9999 999 9999 9.99 +99.9
Actual 9999 999 9999 ---- -----
Prev.
Next

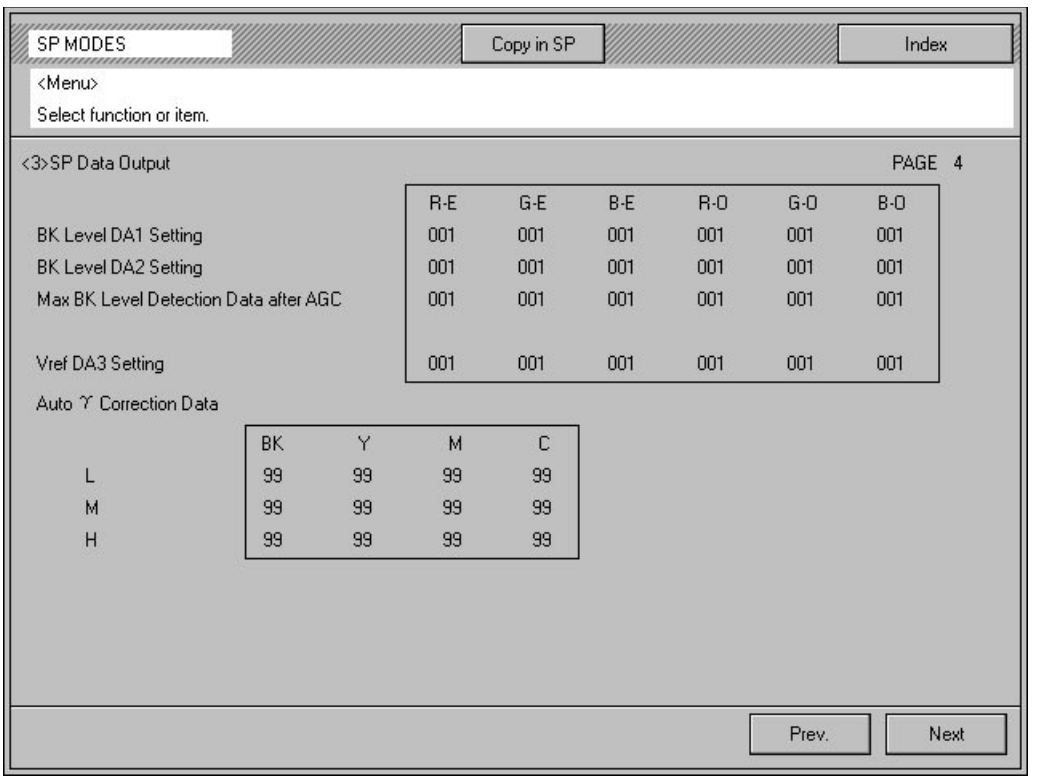
SP MODES
Copy in SP
Index
<Menu>
Select function or item.
<3>SP Data Output
PAGE 4
R-E G-E B-E R-O G-O B-O
BK Level DA1 Setting 001 001 001 001 001 001
BK Level DA2 Setting 001 001 001 001 001 001
Max BK Level Detection Data after AGC 001 001 001 001 001 001
Vref DA3 Setting 001 001 001 001 001 001
Auto γ Correction Data
BK Y M C
L 99 99 99 99
M 99 99 99 99
H 99 99 99 99
Prev.
Next

Page	Item	Function	Note
<3> -3	Drum Potential Control Output	Indicates the target and actual data related to process control.	VD: charge potential VL: exposed drum potential VB: development bias γ : development gamma VK: development reference data
<3> -4	Bk Level DA1 Setting	Displays DA1 settings.	Factory use only
	Bk Level DA2 Setting	Displays DA2 settings.	Factory use only
	Max Bk Level Detection Data after AGC	Displays DA2* settings.	Factory use only
	Vref DA3 Setting	Displays DA3 settings.	Factory use only
	Auto γ Correction Data	Indicates the correction data decided in auto γ correction.	Indication only

1.2.4 [4] SP Special Feature

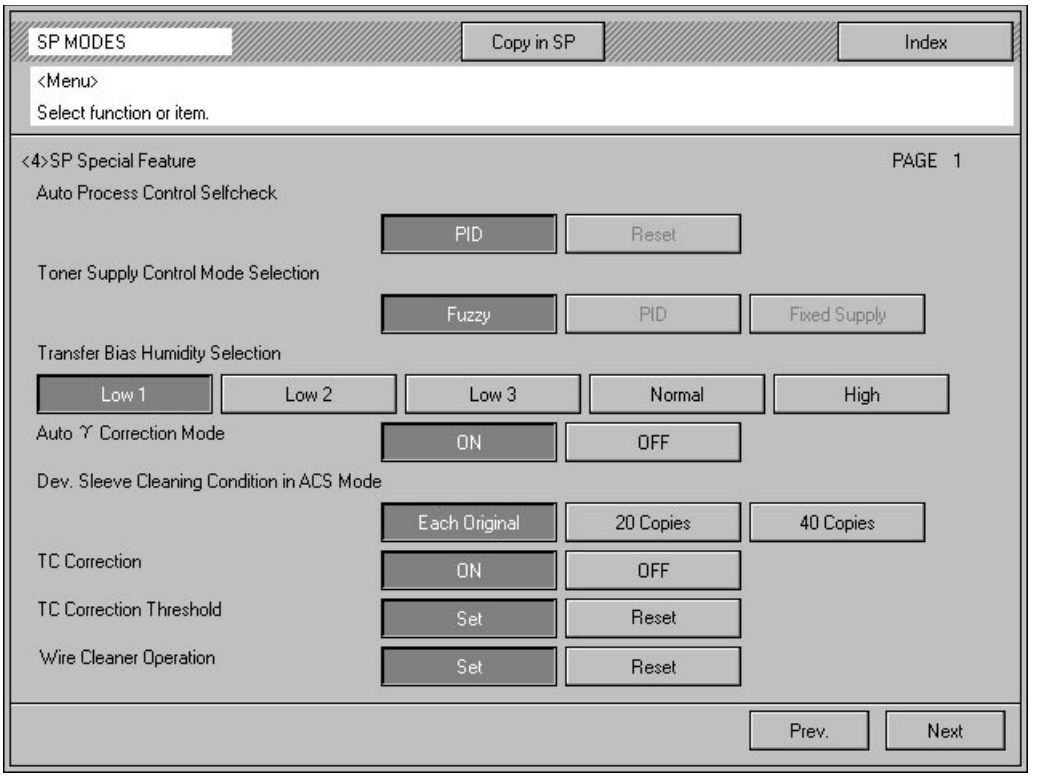

Page	Item	Function	Note
<4> -1	Auto Process Control Self check	Factory use only	**"PID" setting must be used.**
	Toner Supply Control Mode Selection	Selects toner supply mode.	Default: Fuzzy **"Fuzzy" setting must be used.**
	Transfer Bias Humidity Selection	Selects the output voltage for the transfer belt and the transfer roller bias that are used if the humidity sensor is not working properly. Use the setting that best approximates the machine's location.	Default: Normal This function is effective under the following conditions: 1. Humidity sensor is not working well: • Output is 0. • Temperature output is over 49°C or below 2°C. • Humidity output is over 98% or below 2%. 2. Humidity sensor is disconnected. 3. Humidity sensor function is disabled: SP<1>P.16 Other SP #13=1
	Auto γ Correction Mode	Enable or disable the auto γ correction mode.	Default: ON
	Dev. Sleeve Cleaning Condition in ACS Mode	Selects the interval of the development sleeve cleaning mode in ACS&DJF mode.	Default: 40 copies
	TC Correction	Selects the TC correction (Vcnt correction) on or off.	Default: ON **Do not change the setting in the field.**
	TC Correction Threshold	Selects to use or not to use the threshold set in the SP "<1>-4 TC Correction Threshold".	Default: Reset **Do not change the setting in the field.**
	Wire Cleaner Operation	Enables/disables the automatic charge corona wire/grid cleaning operation.	Default: Set (Enabled)

Service Tables

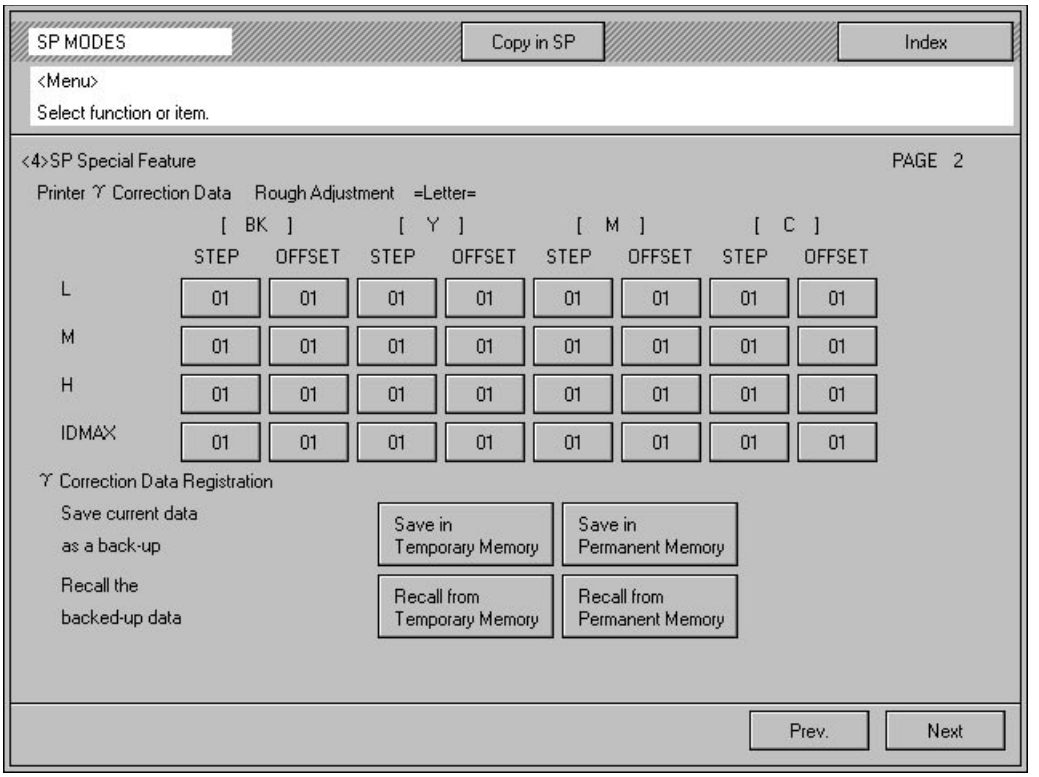
SP MODES
Copy in SP
Index
<Menu>
Select function or item.
<4>SP Special Feature
PAGE 2
Printer γ Correction Data Rough Adjustment =Letter=
[BK] [Y] [M] [C]
STEP OFFSET STEP OFFSET STEP OFFSET STEP OFFSET
L 01 01 01 01 01 01 01 01
M 01 01 01 01 01 01 01 01
H 01 01 01 01 01 01 01 01
IDMAX 01 01 01 01 01 01 01 01
γ Correction Data Registration
Save current data as a back-up
Save in Temporary Memory
Save in Permanent Memory
Recall the backed-up data
Recall from Temporary Memory
Recall from Permanent Memory
Prev.
Next

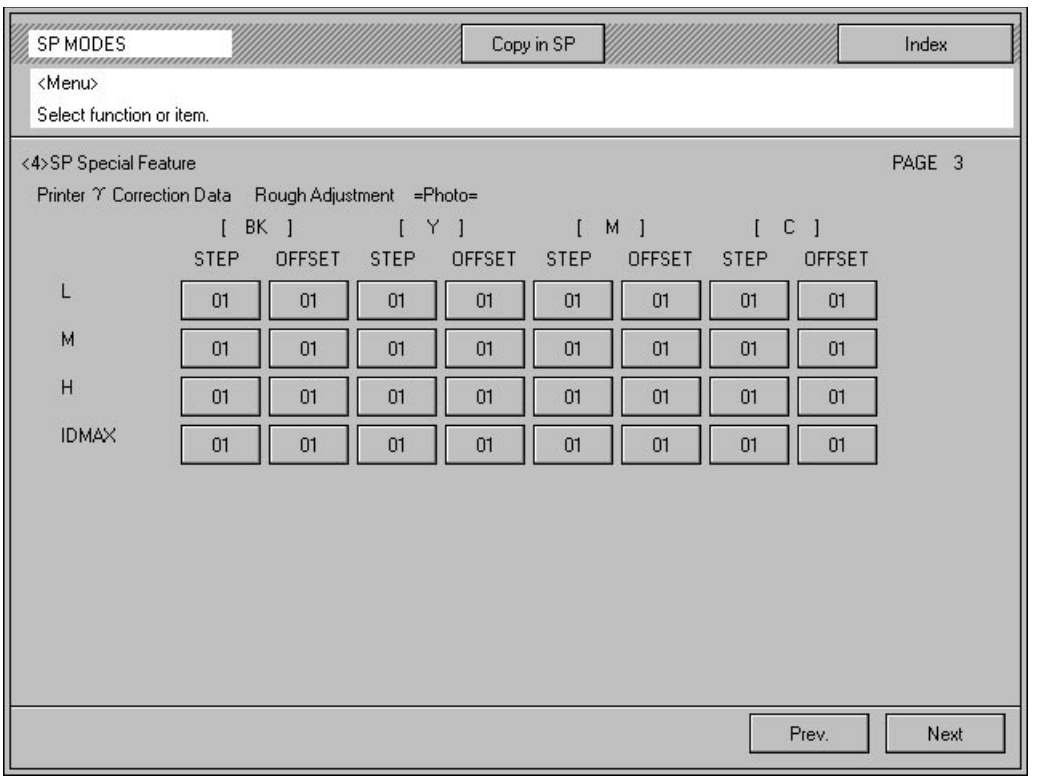
SP MODES
Copy in SP
Index
<Menu>
Select function or item.
<4>SP Special Feature
PAGE 3
Printer γ Correction Data Rough Adjustment =Photo=
[BK] [Y] [M] [C]
STEP OFFSET STEP OFFSET STEP OFFSET STEP OFFSET
L 01 01 01 01 01 01 01 01
M 01 01 01 01 01 01 01 01
H 01 01 01 01 01 01 01 01
IDMAX 01 01 01 01 01 01 01 01
Prev.
Next

Page	Item	Function	Note
	Printer γ Correction Data Rough Adjustment =Letter=	Adjusts image density for each color in letter mode. (Letter mode rough adjustment)	**Do not change the STEP data in the field.** See section 5, color balance adjustment.
<4> -2	γ ***Correction Data Registration***	Saves or recalls the printer γ correction data for Letter & Photo rough adjustment and Letter & Printed Photo fine adjustment in the temporary memory or the permanent memory. ***Saves current data as back-up*** Saves the current printer γ correction data in the memory. ***Recalls the back-up data*** Recalls the printer γ correction data from the memory.	Factory settings for the printer γ correction are kept in permanent memory. • To keep the factory settings, do not use "Save in Permanent Memory", as long as the data has not been corrupted. • The current settings will be saved in the temporary memory automatically after performing the ACC. • "Recall from Temporary Memory" can be used to undo the last ACC.
<4> -3	Printer γ Correction Data Rough Adjustment =Photo=	Adjusts image density for each color in photo mode. (Photo mode rough adjustment)	**Do not change the STEP data in the field.** See section 5, color balance adjustment.

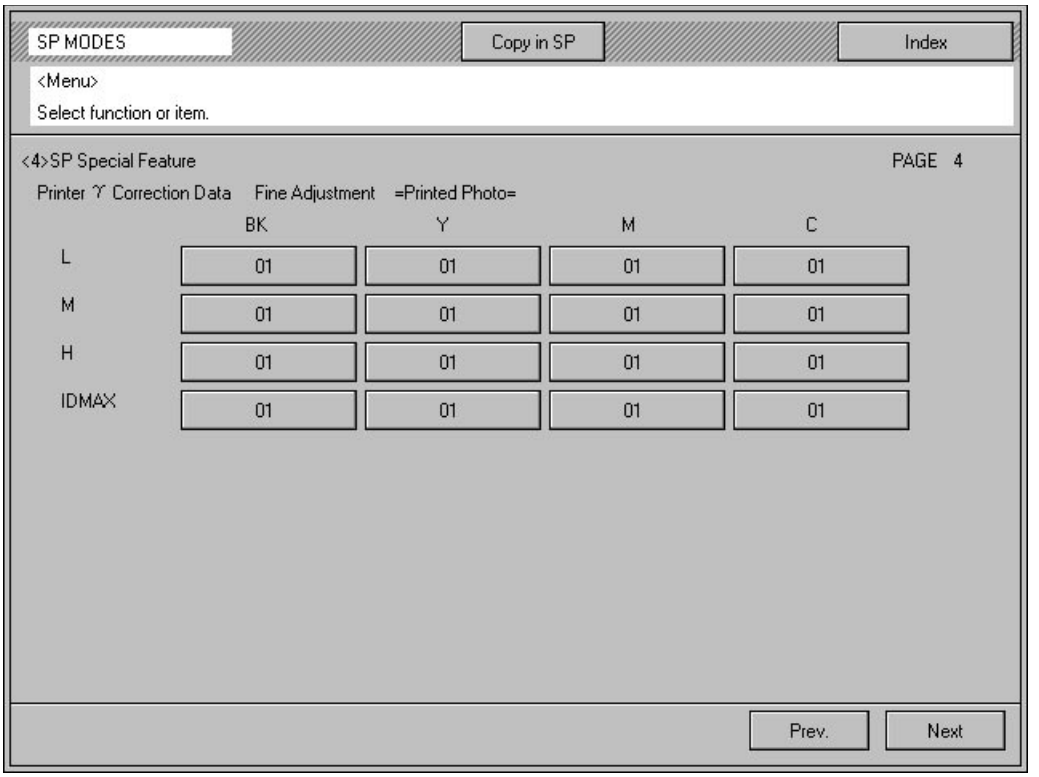
SP MODES
Copy in SP
Index
<Menu>
Select function or item.
<4>SP Special Feature
PAGE 4
Printer γ Correction Data Fine Adjustment =Printed Photo=
BK Y M C
L 01 01 01 01
M 01 01 01 01
H 01 01 01 01
IDMAX 01 01 01 01
Prev.
Next

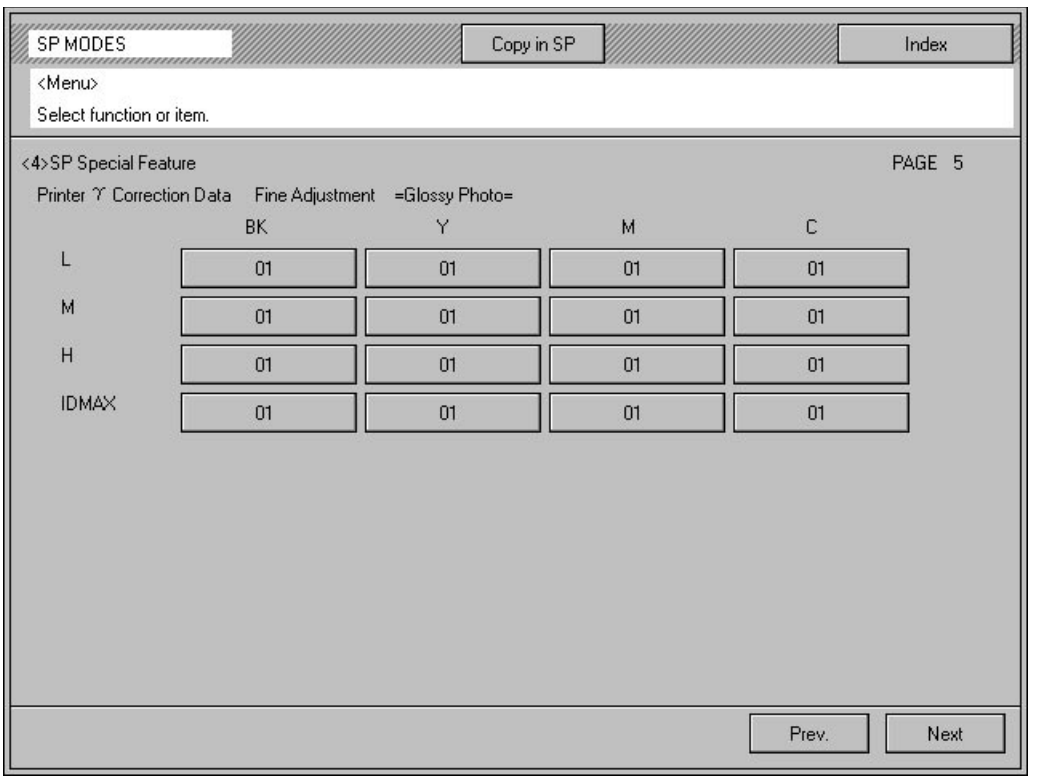
SP MODES
Copy in SP
Index
<Menu>
Select function or item.
<4>SP Special Feature
PAGE 5
Printer γ Correction Data Fine Adjustment =Glossy Photo=
BK Y M C
L 01 01 01 01
M 01 01 01 01
H 01 01 01 01
IDMAX 01 01 01 01
Prev.
Next

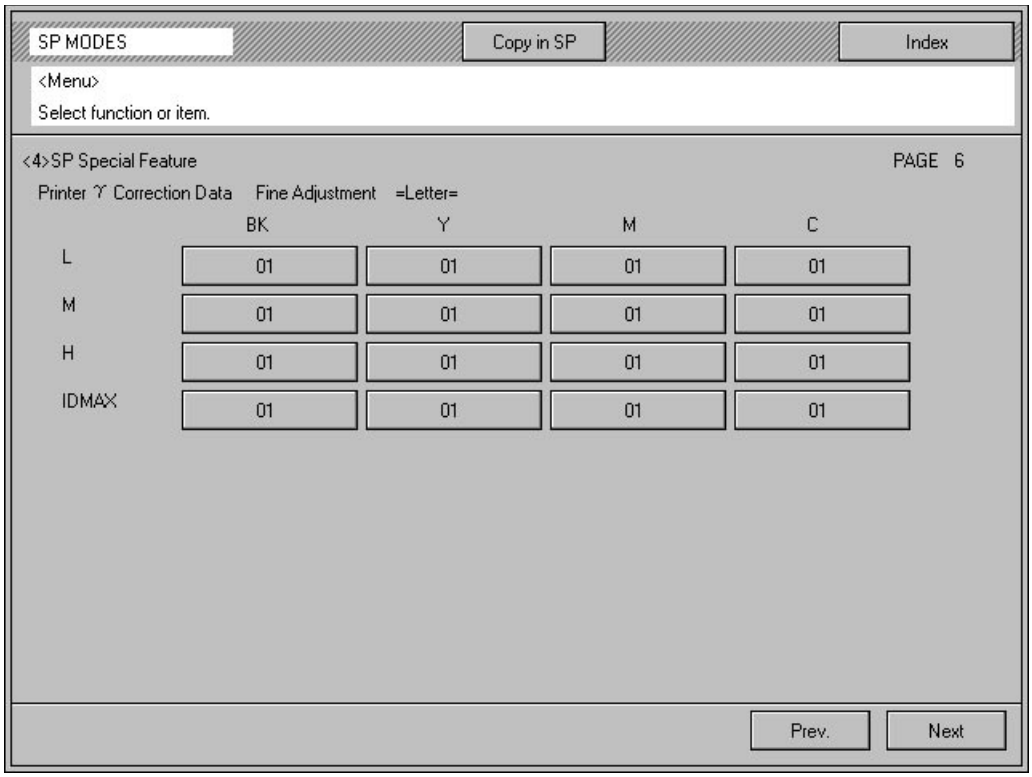

Page	Item	Function	Note
<4> -4	Printer γ Correction Data Fine Adjustment =Printed Photo=	Adjusts each color image density (Letter mode fine adjustment)	**Do not adjust in the field.** Default: 5 for all
<4> -5	***Printer γ Correction Data Fine Adjustment =Glossy Photo=***	Not used. (Indication only)	Default: 5 for all
<4> -6	Printer γ Correction Data Fine Adjustment =Letter=	Adjusts each color image density (Letter mode fine adjustment)	**Do not change the data in the field.** Default: 5 for all

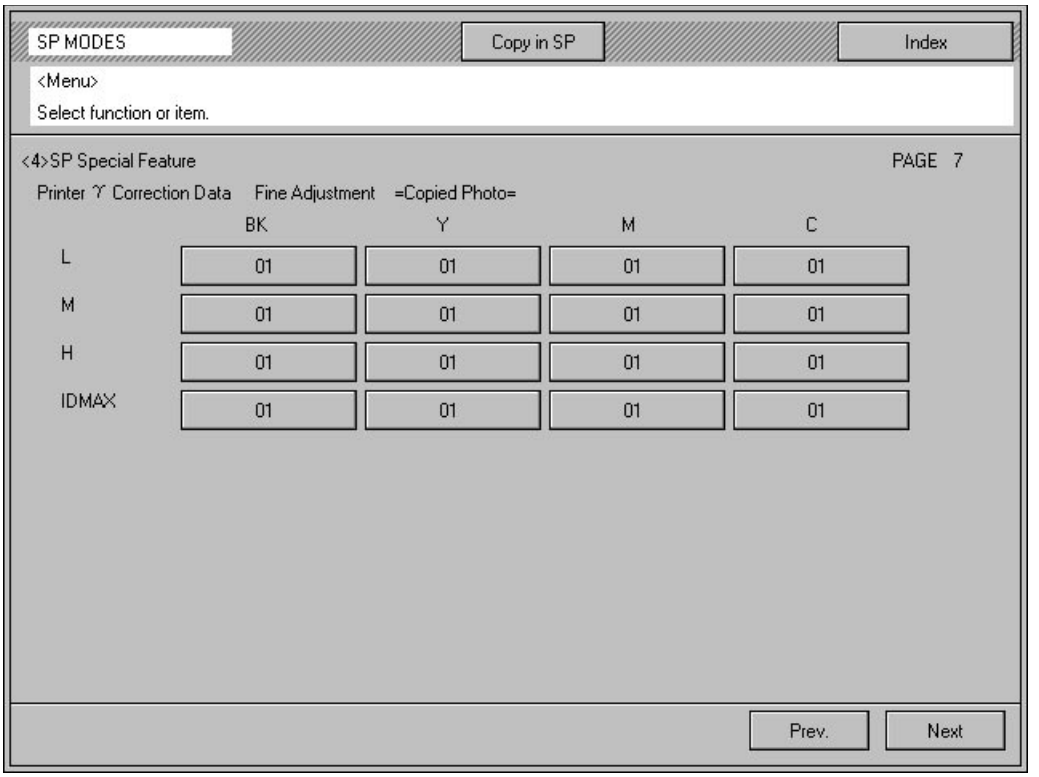
SP MODES
Copy in SP
Index
<Menu>
Select function or item.
<4>SP Special Feature
PAGE 7
Printer γ Correction Data Fine Adjustment =Copied Photo=
BK Y M C
L 01 01 01 01
M 01 01 01 01
H 01 01 01 01
IDMAX 01 01 01 01
Prev.
Next

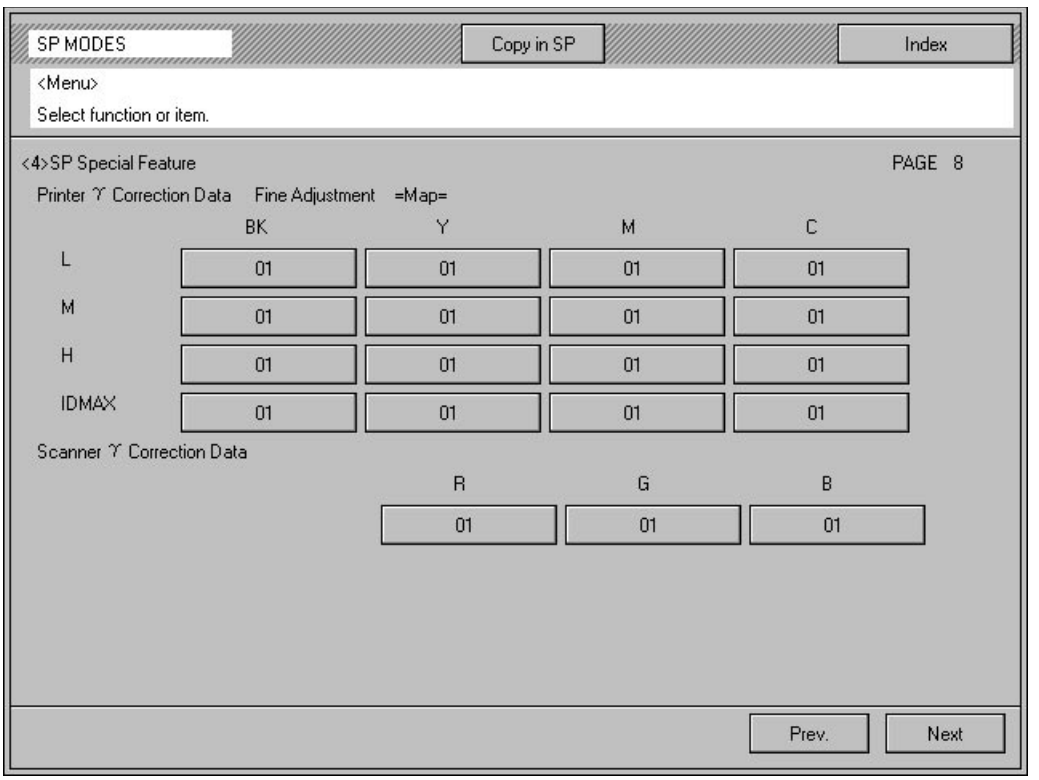
SP MODES
Copy in SP
Index
<Menu>
Select function or item.
<4>SP Special Feature
PAGE 8
Printer γ Correction Data Fine Adjustment =Map=
BK Y M C
L 01 01 01 01
M 01 01 01 01
H 01 01 01 01
IDMAX 01 01 01 01
Scanner γ Correction Data
R G B
01 01 01
Prev.
Next

Page	Item	Function	Note
<4> -7	***Printer γ Correction Data Fine Adjustment =Copied Photo=***	Not used. (Indication only)	Default: 5 for all
<4> -8	***Printer γ Correction Data Fine Adjustment =Map=***	Not used. (Indication only)	Default: 5 for all
	Scanner γ Correction Data	Not used. (Indication only)	Default: 75 for all

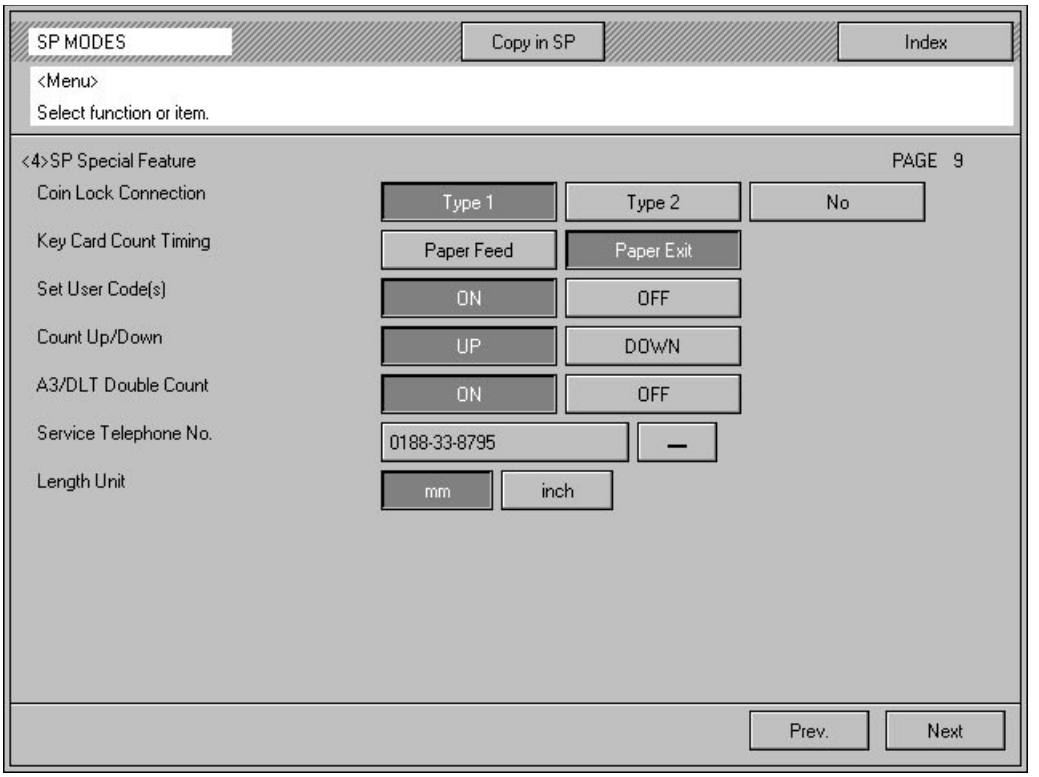
SP MODES
Copy in SP
Index
<Menu>
Select function or item.
<4>SP Special Feature
PAGE 9
Coin Lock Connection
Type 1
Type 2
No
Key Card Count Timing
Paper Feed
Paper Exit
Set User Code(s)
ON
OFF
Count Up/Down
UP
DOWN
A3/DLT Double Count
ON
OFF
Service Telephone No.
0188-33-8795
Length Unit
mm
inch
Prev.
Next

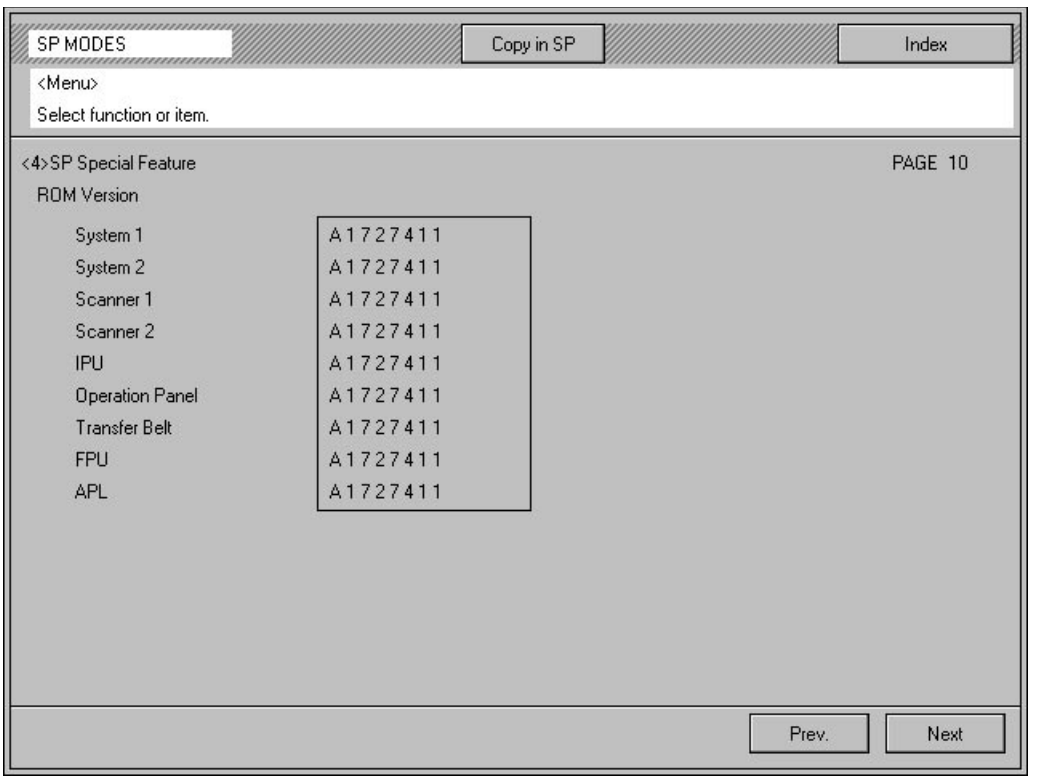
SP MODES
Copy in SP
Index
<Menu>
Select function or item.
<4>SP Special Feature
PAGE 10
ROM Version
System 1 A1727411
System 2 A1727411
Scanner 1 A1727411
Scanner 2 A1727411
IPU A1727411
Operation Panel A1727411
Transfer Belt A1727411
FPU A1727411
APL A1727411
Prev.
Next

Page	Item	Function	Note
<4> -9	***Coin Lock Connection***	Not used.	Default: No
	Key Card Count Timing	Not used.	Default: Paper Exit
	Set User Code(s)	Enables user code mode.	Default: OFF The key counter shorting connector should be disconnected to enable user code mode.
	ADS Priority	Not used.	
	Count Up/Down	Selects copy count up or down.	Default: UP
	A3/DLT Double Count	Counts twice when an A3 or 11" x 17" copy is made.	Defaults: OFF
	Service Telephone No.	Stores the service center telephone number. This telephone number is indicated on the LCD when a service call condition occurs or PM is required.	Entering procedure: 1. Touch [000000000000000] key. 2. Enter numbers by pressing the number keys. (touch [–] to enter a hyphen). 3. Touch [000000000000000] key.
	Length Unit	Changes the length unit (mm or inches) for Shift, Erase, Size Mag. and Non Standard Original.	Default: inch (-10/15/17) mm (-22/26/27/29)
<4> -10	ROM Version	Indicates the ROM reference number, with suffix, on each PCB.	System 1: Main control IC1 System 2: Main control IC522 Scanner 1: Scanner control IC145 Scanner 2: Scanner control IC144 IPU: IC305 Operation Panel: IC1 Transfer Belt: Transfer belt motor drive IC609 FPU: --- APL: ---

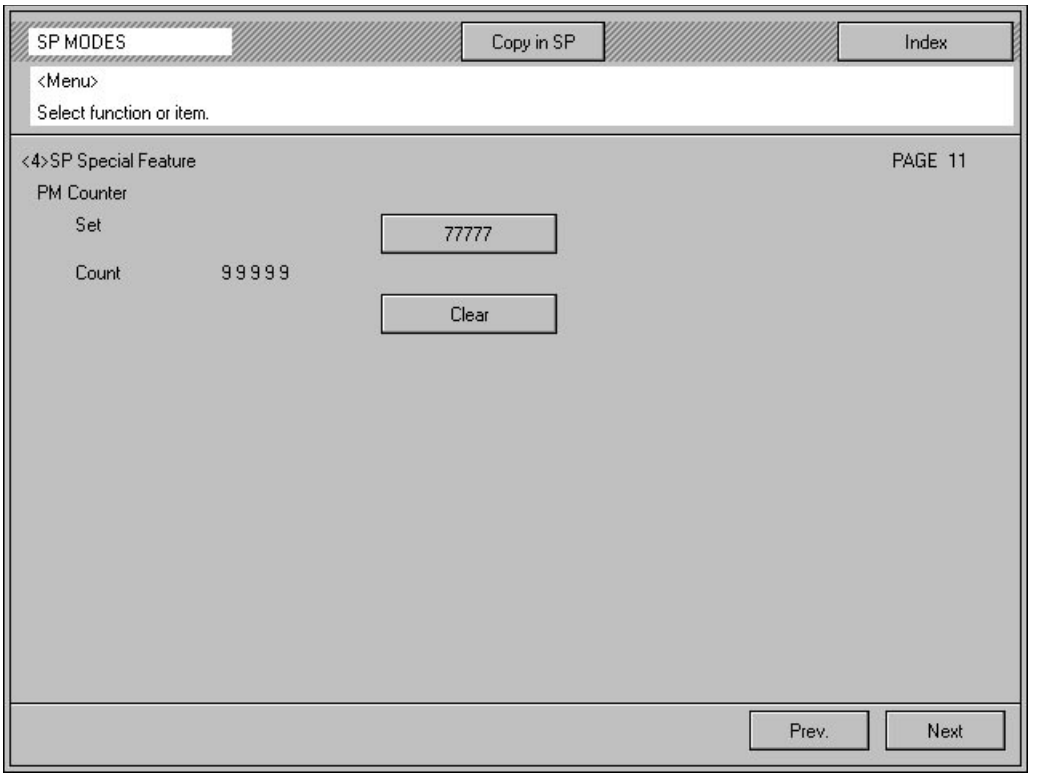
SP MODES
Copy in SP
Index
<Menu>
Select function or item.
<4>SP Special Feature
PAGE 11
PM Counter
Set
77777
Count
99999
Clear
Prev.
Next

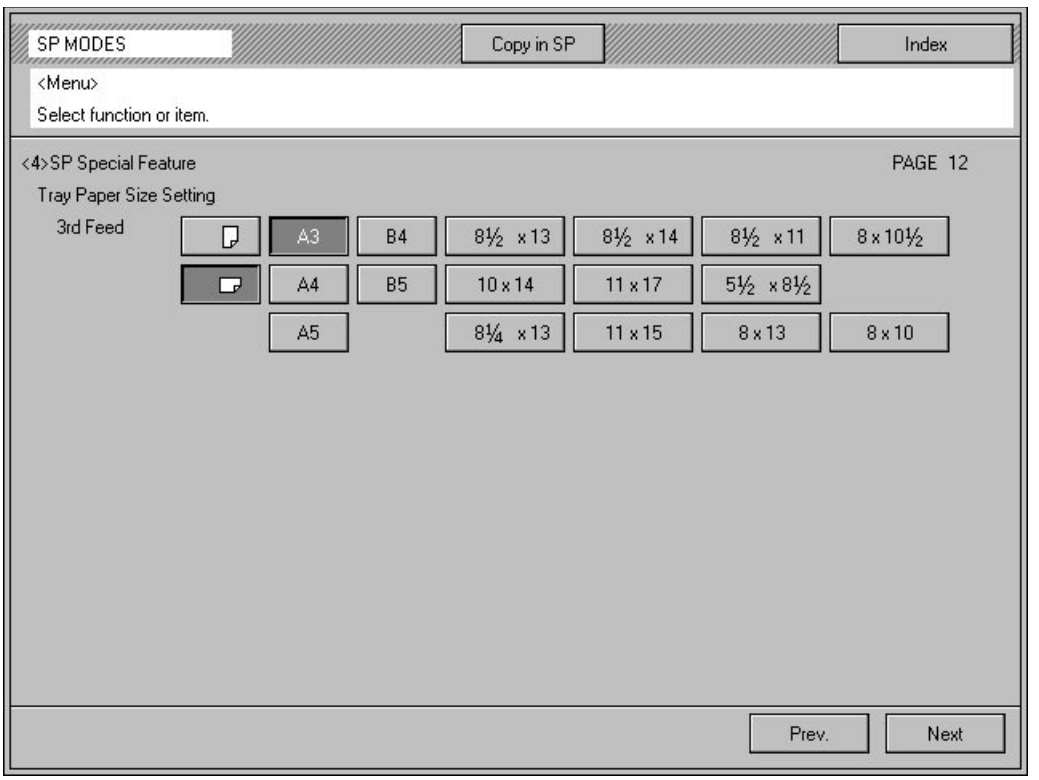
SP MODES
Copy in SP
Index
<Menu>
Select function or item.
<4>SP Special Feature
PAGE 12
Tray Paper Size Setting
3rd Feed
A3
B4
8½ x13
8½ x14
8½ x11
8 x10½
A4
B5
10 x14
11 x17
5½ x8½
A5
8¼ x13
11 x15
8 x13
8 x10
Prev.
Next

Page	Item	Function	Note
<4> -11	PM Counter	Selects the PM alarm interval after counter clear.	If you do not use the PM alarm, set this to "0". Default: 0
<4> -12	Tray Paper Size Setting	Selects the paper size and direction of the 3rd paper feed station.	

1.2.5 [5] Jam/SC Counter

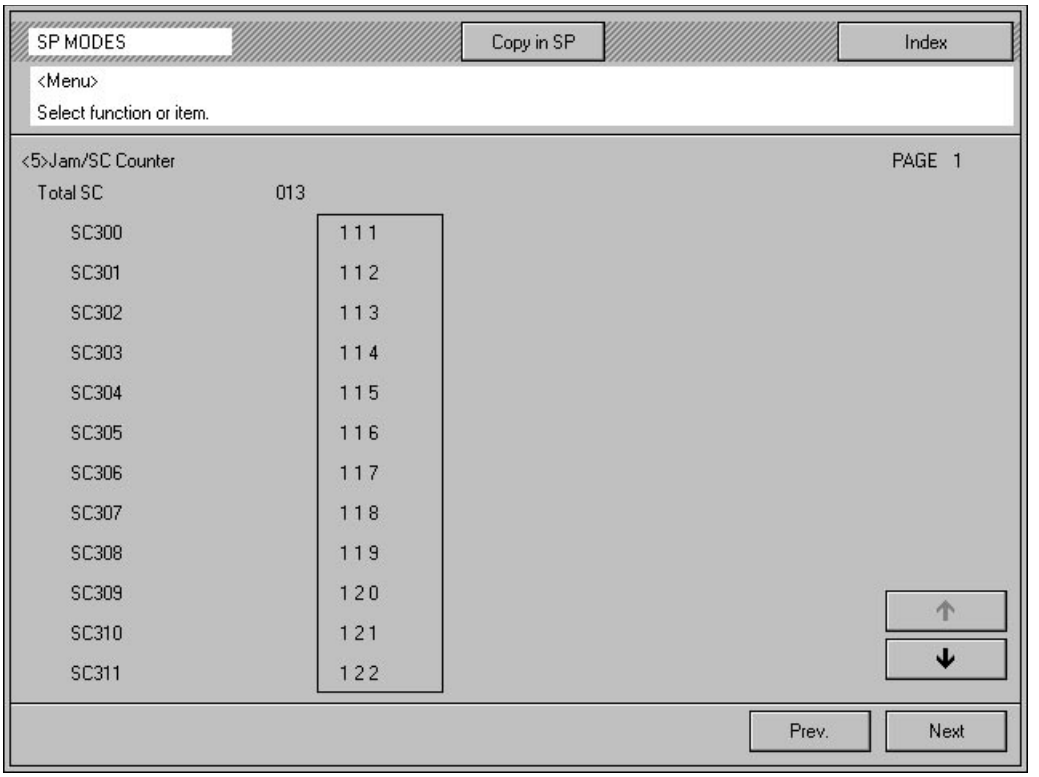

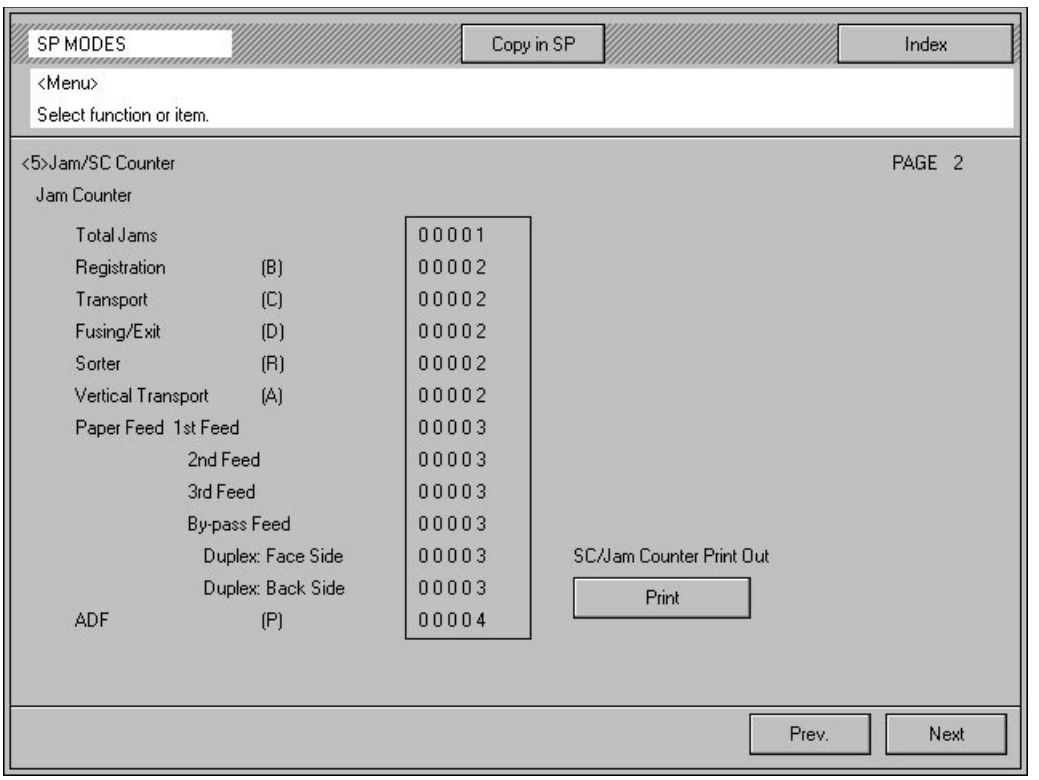

Page	Item	Function	Note
<5> -1	Total SC	Indicates the total number of service calls for each SC code.	See section 6 for details on each SC code. SCs that have not occurred at least once are not displayed.
<5> -2	Jam Counter	Indicates the total number of jams which have occurred in the copier and all peripherals.	
	SC/Jam Count Print Out	Prints out all the SC/Jam counters.	A4 sideways/11" x 8 1/2" or A3/11" x 17" paper should be loaded in the tray or the by-pass feed table.

1.2.6 [6] Operation Counter

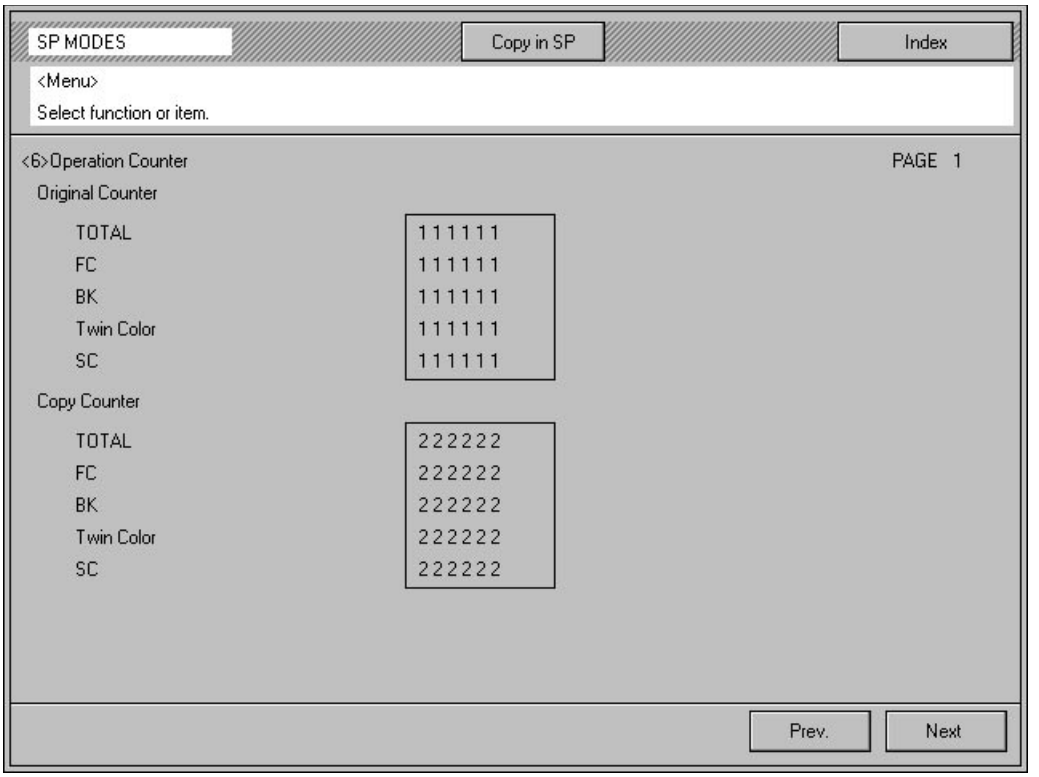

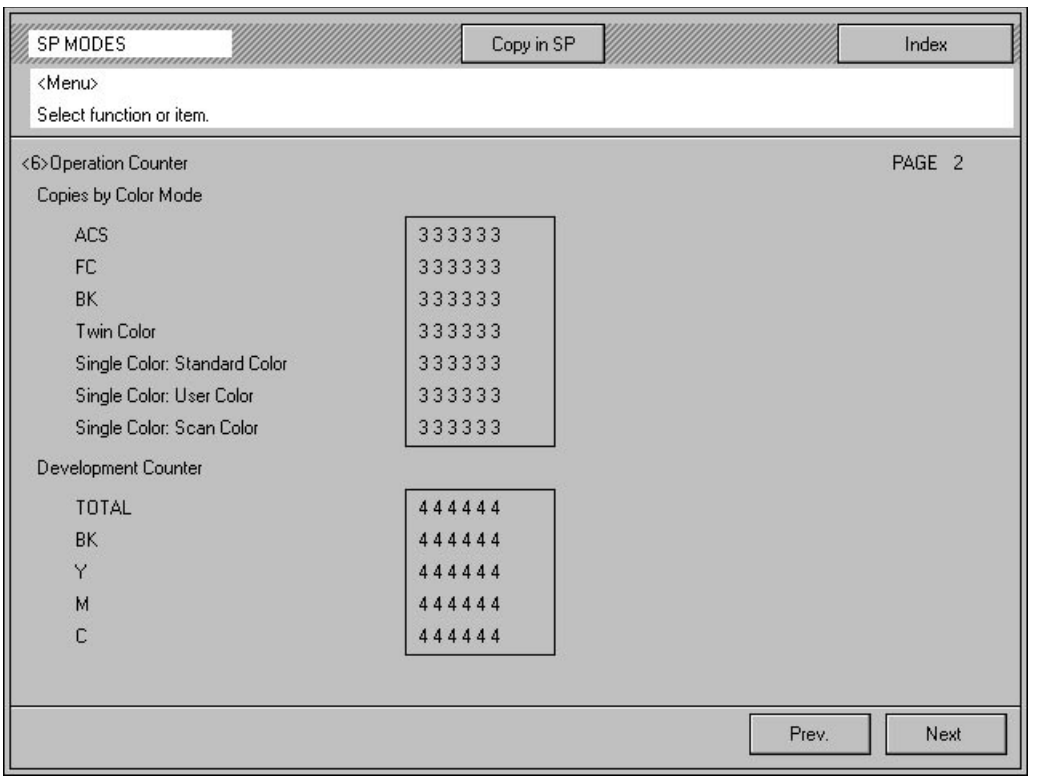

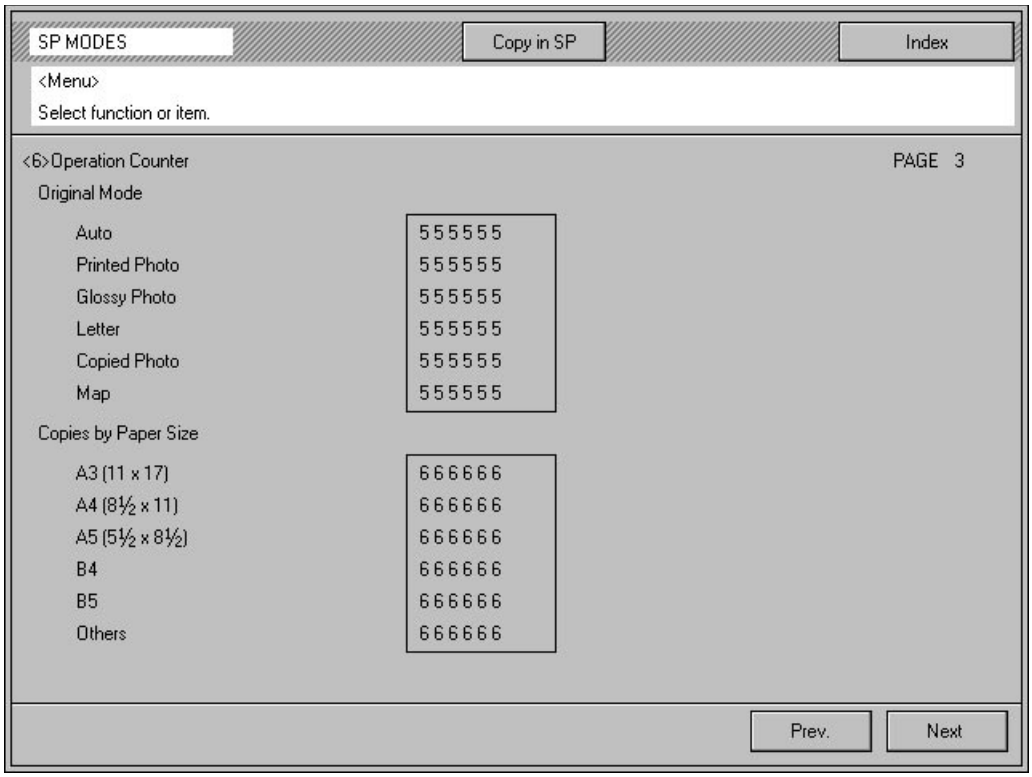

Page	Item	Function	Note
<6> -1	Original Counter	Indicates the total number of originals that have been copied in each color mode.	
	Copy Counter	Indicates the total number of scans, broken down by copy mode.	Count up method is the same as that for mecanical counters. Twin Color and SC (Single Color) counters are not used.
<6> -2	***Copies by Color Mode***	Indicates the total number of copies, broken down by color mode.	
	Development Counter	Indicates the total number of developments which have occurred for each color since the last Counter All Clear or Operation Counter Clear was performed.	
<6> -3	Original Mode	Indicates the total number of copies broken down by original mode.	
	Copies by Paper Size	Indicates the total number of copies broken down by paper size.	

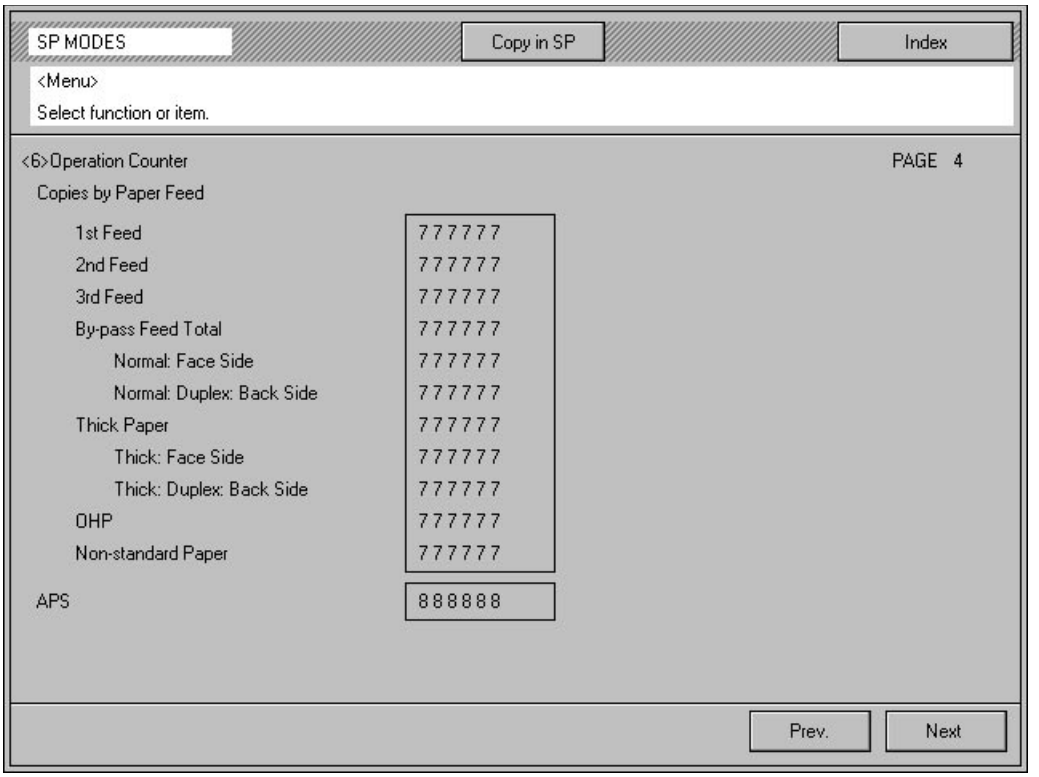
SP MODES
Copy in SP
Index
<Menu>
Select function or item.
<6>Operation Counter
PAGE 4
Copies by Paper Feed
1st Feed 777777
2nd Feed 777777
3rd Feed 777777
By-pass Feed Total 777777
Normal: Face Side 777777
Normal: Duplex: Back Side 777777
Thick Paper 777777
Thick: Face Side 777777
Thick: Duplex: Back Side 777777
OHP 777777
Non-standard Paper 777777
APS 888888
Prev.
Next

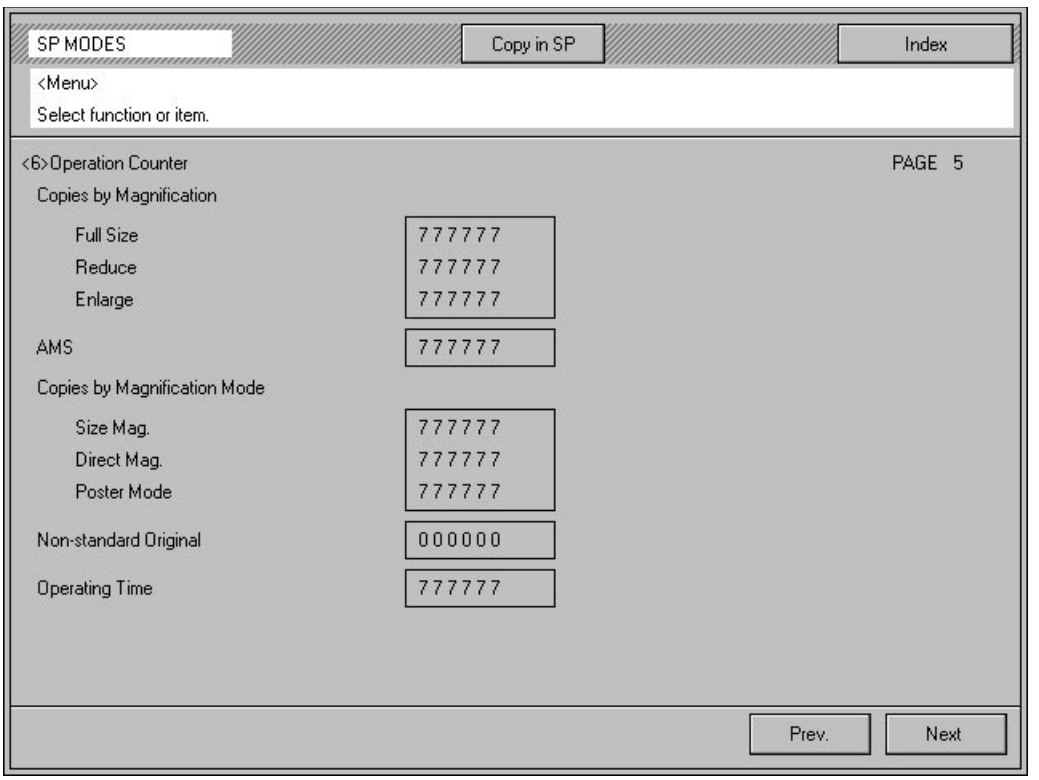
SP MODES
Copy in SP
Index
<Menu>
Select function or item.
<6>Operation Counter
PAGE 5
Copies by Magnification
Full Size 777777
Reduce 777777
Enlarge 777777
AMS 777777
Copies by Magnification Mode
Size Mag. 777777
Direct Mag. 777777
Poster Mode 777777
Non-standard Original 000000
Operating Time 777777
Prev.
Next

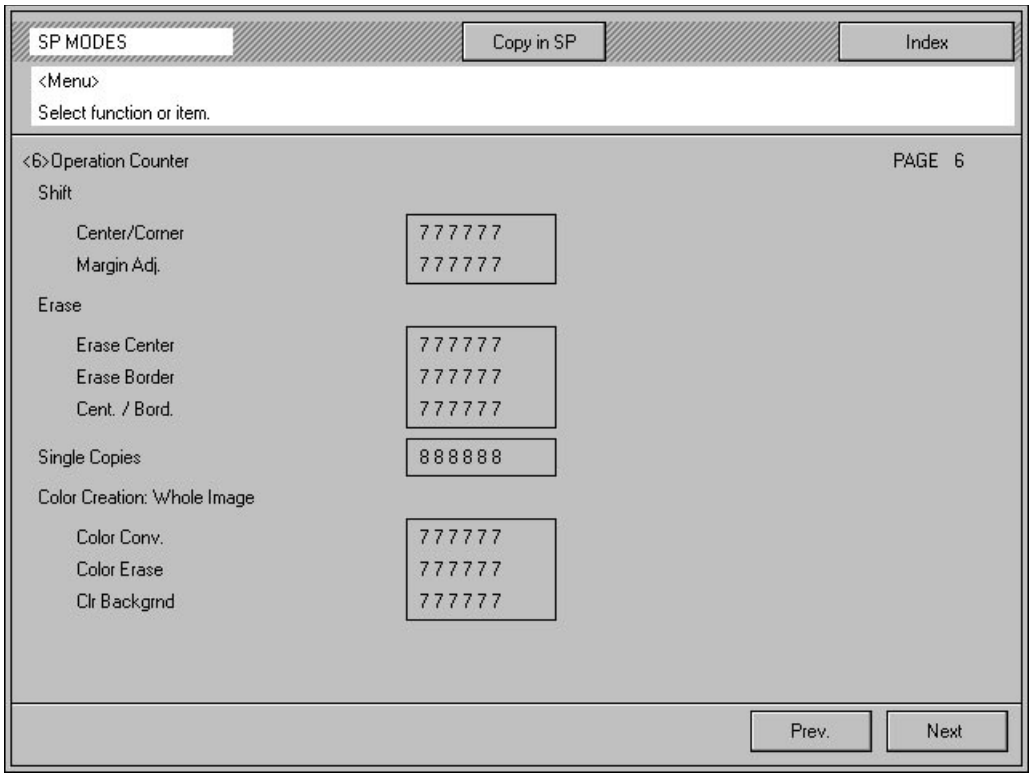

Page	Item	Function	Note
<6> -4	Copies by Paper Feed	Indicates the total number of copies broken down by paper feed station.	
	APS	Indicates the total number of copies made in APS mode.	
<6> -5	Copies by Magnification	Indicates the total number of copies broken down by magnification range.	
	AMS	Indicates the total number of copies made in AMS mode.	
	Non-standard Original	Indicates the total number of non-standard originals.	
	Operating Time	Indicates the total operation time.	Unit: Hours
<6> -6	Shift	Indicates the total number of copies made in Centering/Cornering and Margin Adjustment modes.	
	Erase	Indicates the total number of copies broken down by erase mode.	
	Single Copies	Indicates the total number of copies made in Series copy mode.	

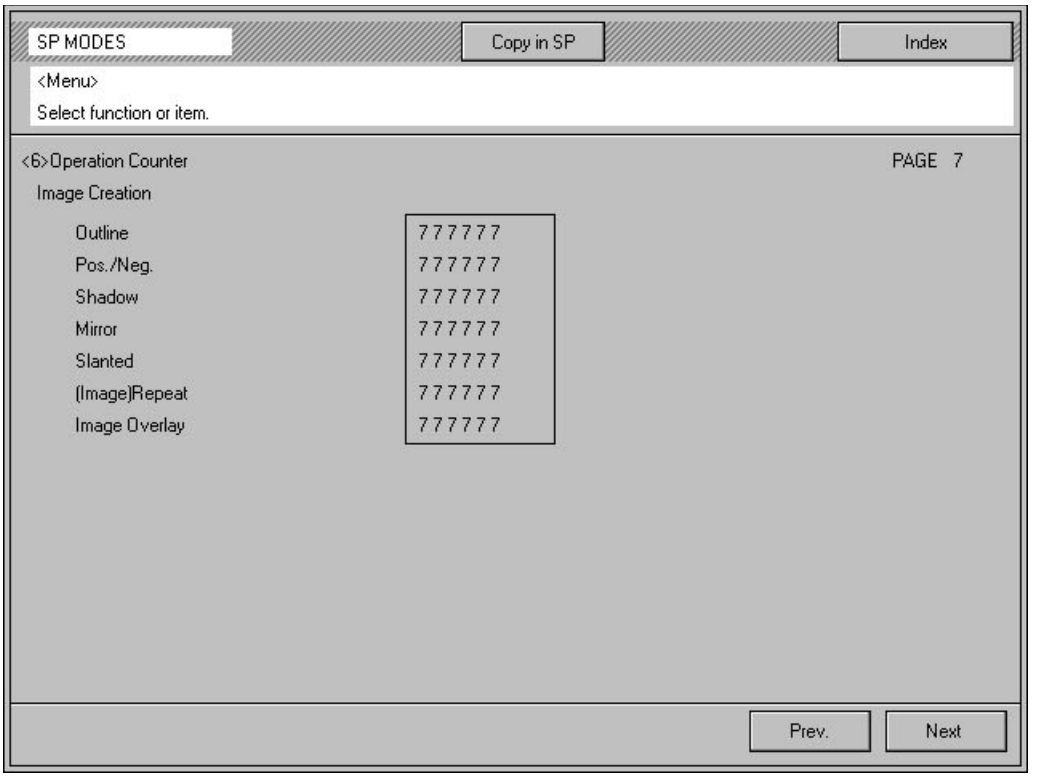
SP MODES
Copy in SP
Index
<Menu>
Select function or item.
<6>Operation Counter
PAGE 7
Image Creation
Outline 777777
Pos./Neg. 777777
Shadow 777777
Mirror 777777
Slanted 777777
(Image)Repeat 777777
Image Overlay 777777
Prev.
Next

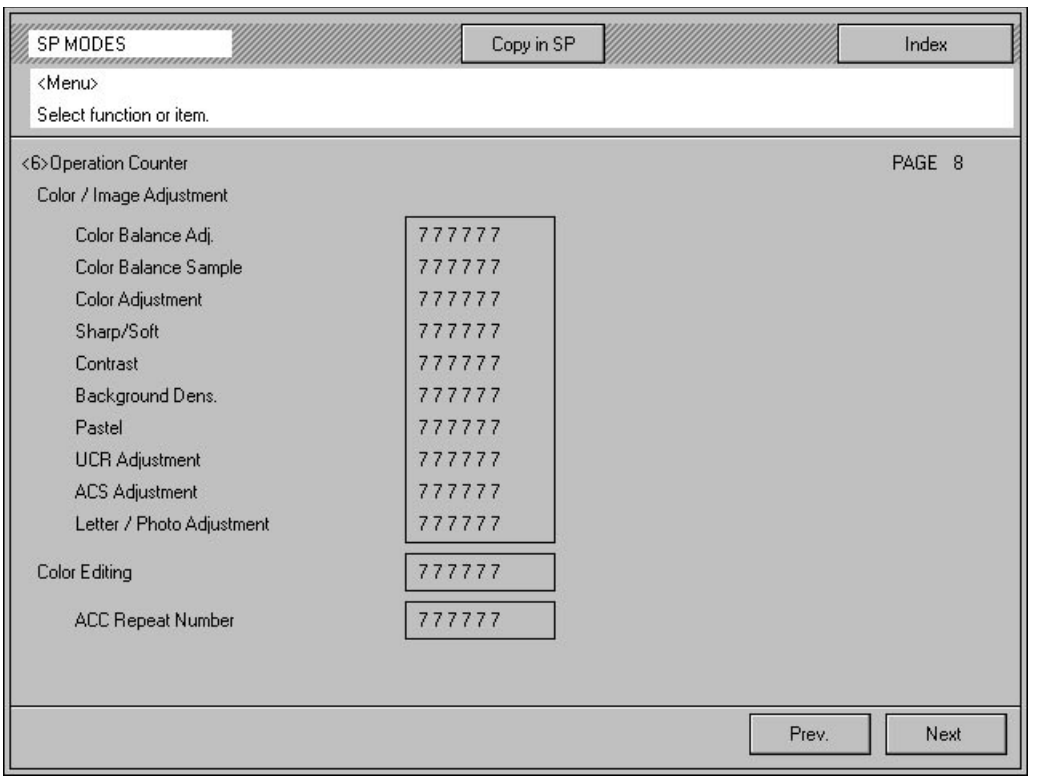
SP MODES
Copy in SP
Index
<Menu>
Select function or item.
<6>Operation Counter
PAGE 8
Color / Image Adjustment
Color Balance Adj. 777777
Color Balance Sample 777777
Color Adjustment 777777
Sharp/Soft 777777
Contrast 777777
Background Dens. 777777
Pastel 777777
UCR Adjustment 777777
ACS Adjustment 777777
Letter / Photo Adjustment 777777
Color Editing 777777
ACC Repeat Number 777777
Prev.
Next

Page	Item	Function	Note
<6> -7	Image Creation	Indicates the total number of copies made in image creation modes.	
<6> -8	Color Creation: Whole Image	Indicates the total number of copies broken down by color creation mode used for the whole copy image.	
	Color/Image Adjustment	Indicates the total number of copies made with color Image adjustment modes.	
	Color Editing	Indicates the total number of copies made with the area editing mode.	

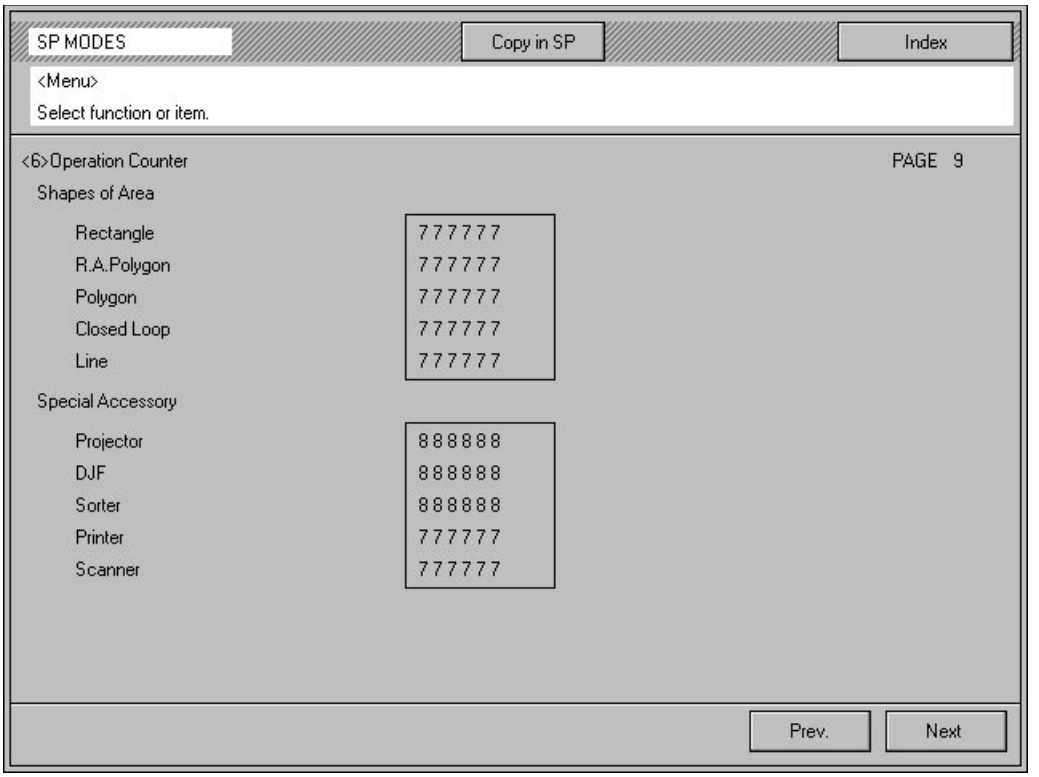
SP MODES
Copy in SP
Index
<Menu>
Select function or item.
<6>Operation Counter
PAGE 9
Shapes of Area
Rectangle
R.A.Polygon
Polygon
Closed Loop
Line
777777
777777
777777
777777
777777
Special Accessory
Projector
DJF
Sorter
Printer
Scanner
888888
888888
888888
777777
777777
Prev.
Next

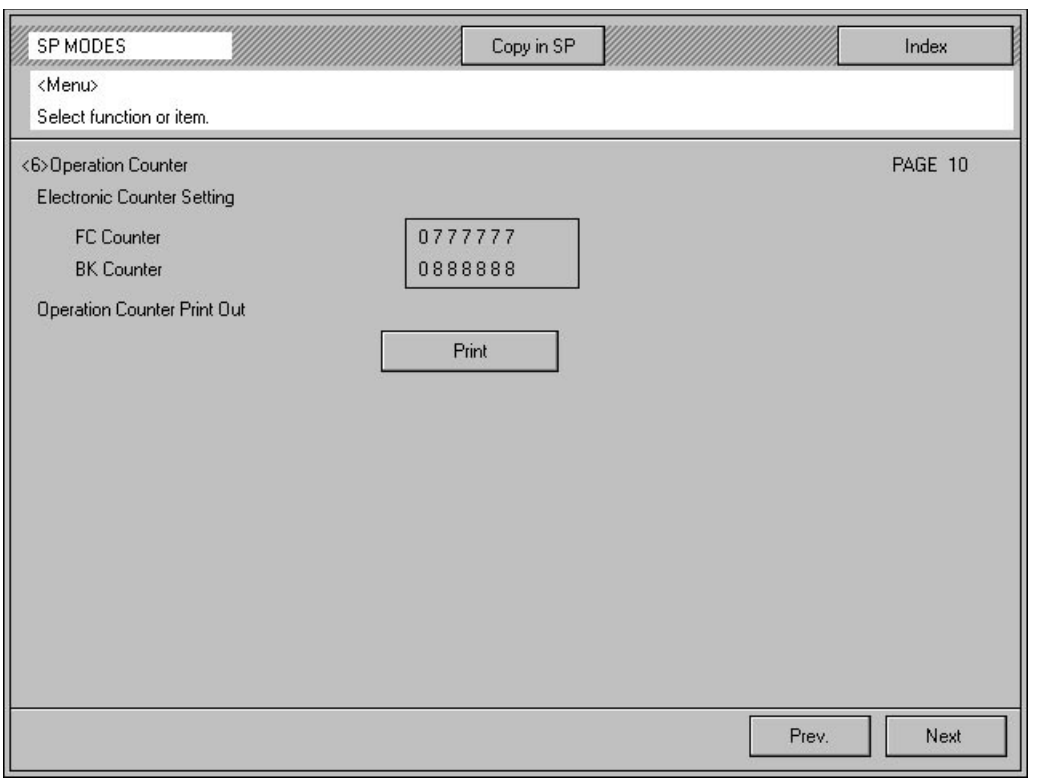
SP MODES
Copy in SP
Index
<Menu>
Select function or item.
<6>Operation Counter
PAGE 10
Electronic Counter Setting
FC Counter
BK Counter
0777777
0888888
Operation Counter Print Out
Print
Prev.
Next

Page	Item	Function	Note
<6> -9	Area Shapes	Indicates the total number of editing areas broken down by area shape.	
	Special Accessory	Indicates the total number of copies for each peripheral.	
<6> -10	***Electronic Counter Setting***	Not used.	
	Operation Counter Print Out	Prints out all the operation counters.	A4 sideways/11" x 8 1/2" or A3/11" x 17" paper should be loaded in the tray or the by-pass feed table.

1.2.7 [7] Counter Clear

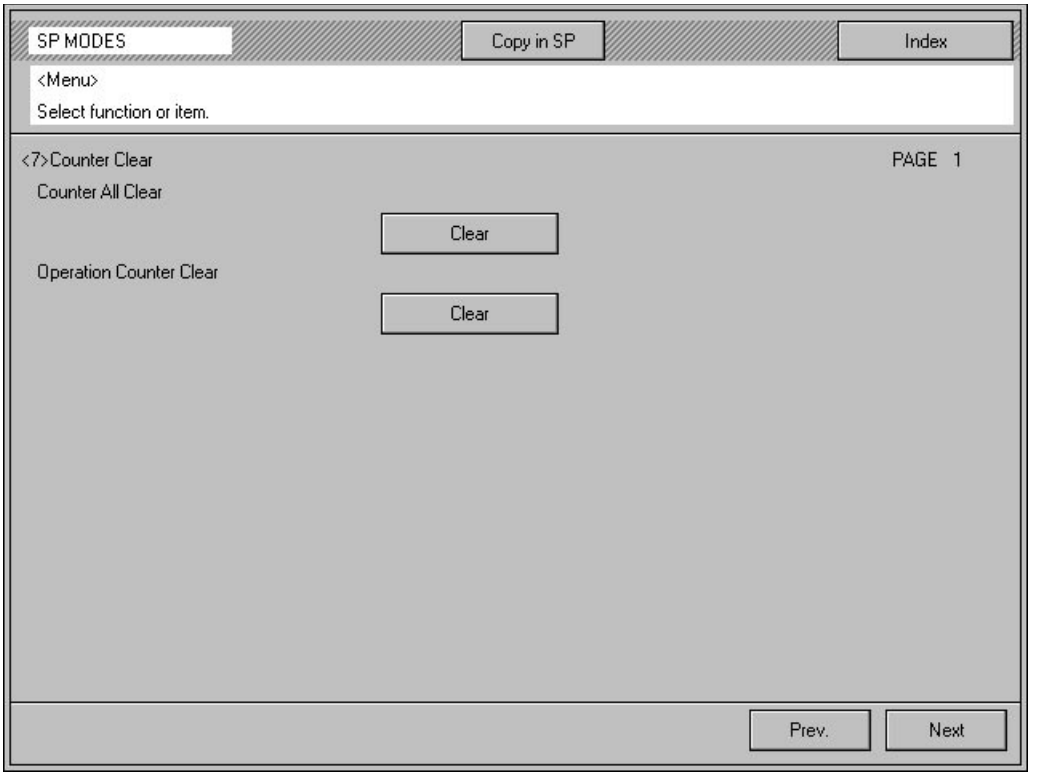

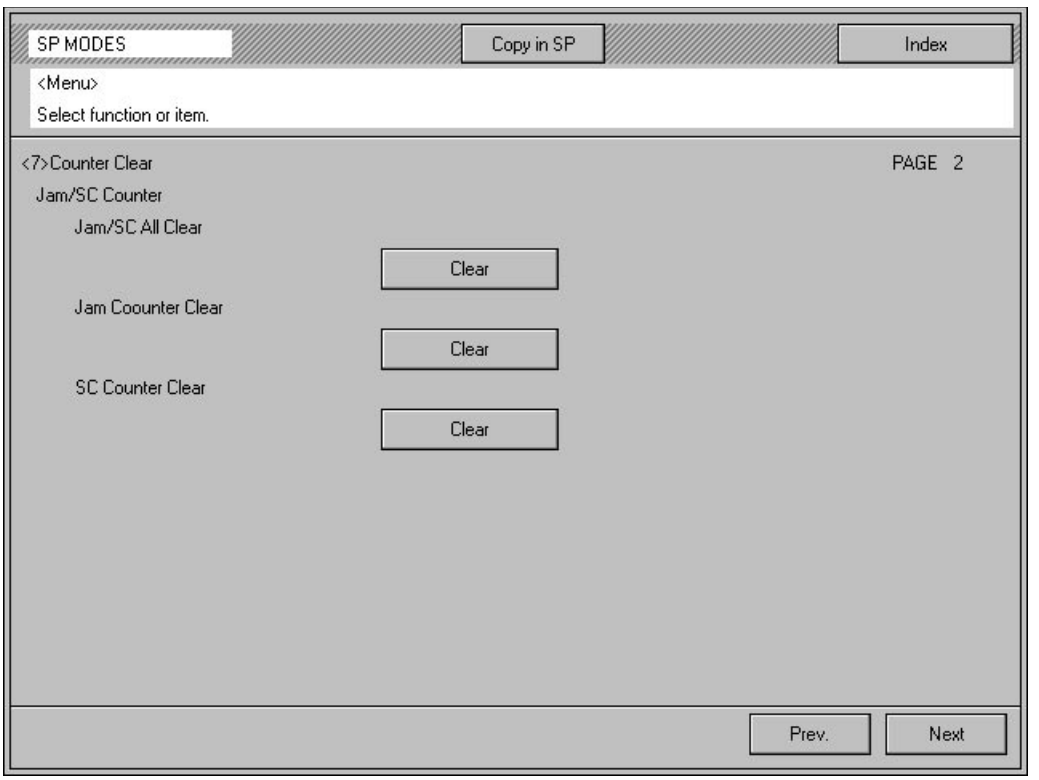

Page	Item	Function	Note
<7> -1	Counter All Clear	Clears all counters	Procedure: 1. Touch the clear key. 2. The display asks Yes or No. If you are sure you want to clear, touch Yes. If you do not want to clear, touch No.
	Operation Counter Clear	Clears all operation counters	
<7> -2	Jam/SC Counter	Clears all jam and SC counters	
		Clears all jam counters	
		Clears all SC counters	

1.2.8 [8] Printer

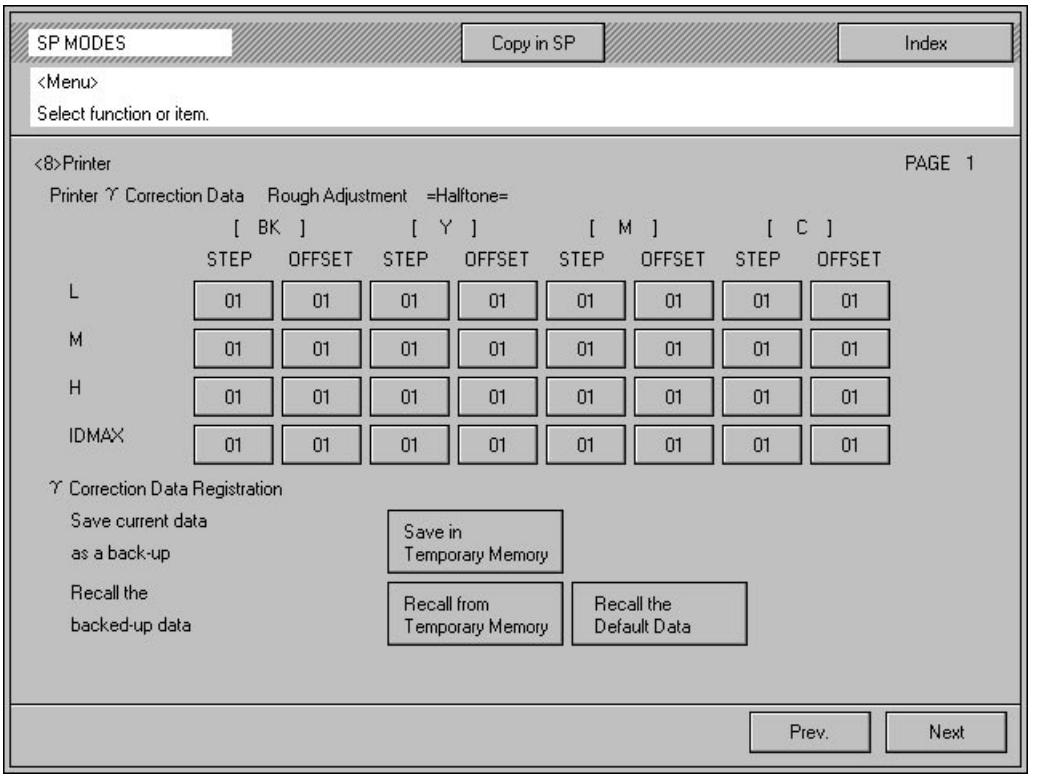

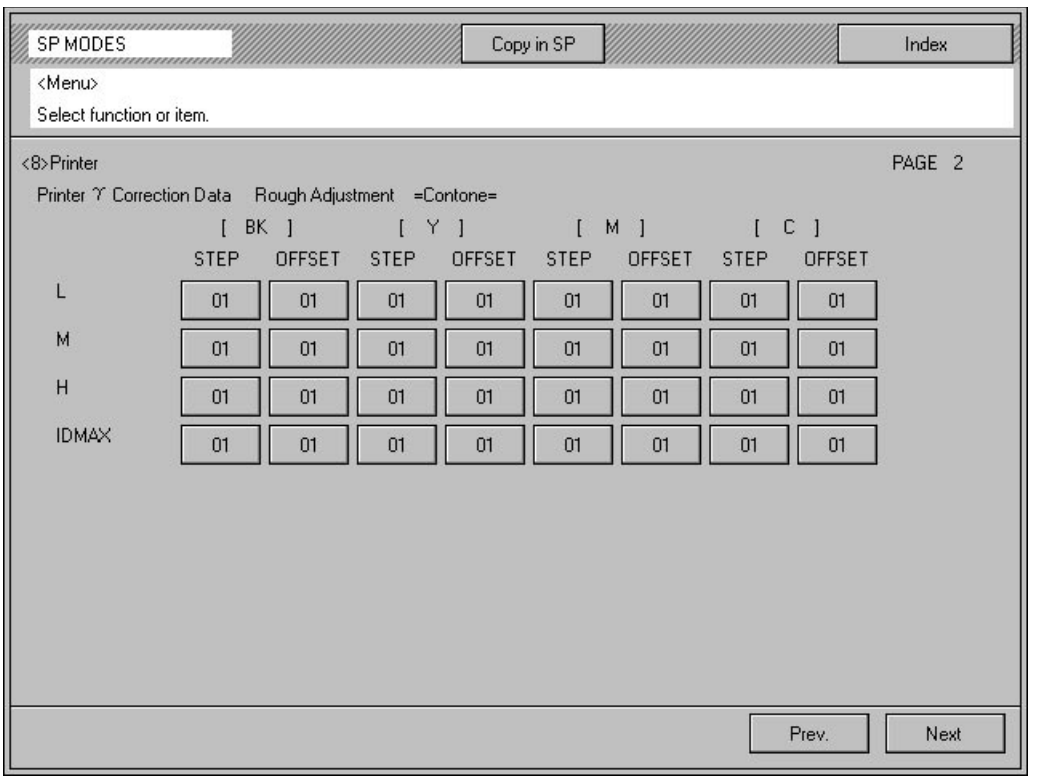

Page	Item	Function	Note
<8> -1	Printer γ Correction Dat. Rough Adjustment =Halftone=	Adjusts each color's image density. (Halftone mode rough adjustment)	**Do not change the STEP values in the field.**
	γ ***Correction Data Registration***	Saves or recalls the printer γ correction data for Halftone & Contone rough adjustment and Halftone & Contone fine adjustment in the temporary memory or the permanent memory. ***Saves current data as back-up*** Saves the current printer γ correction data in the temporary memory. ***Recalls the back-up data*** Recalls the printer γ correction data from the memory.	The printer γ correction for the printer function is not adjusted at the factory. The default data is kept in memory and this cannot be overwritten. • The current settings will be saved in the temporary memory automatically after performing the ACC. • "Recall from Temporary Memory" can be used to undo the last ACC.
<8> -2	Printer γ Correction Dat. Rough Adjustment =Contone=	Adjusts each color's image density. (Contone mode rough adjustment)	**Do not change the STEP values in the field.**

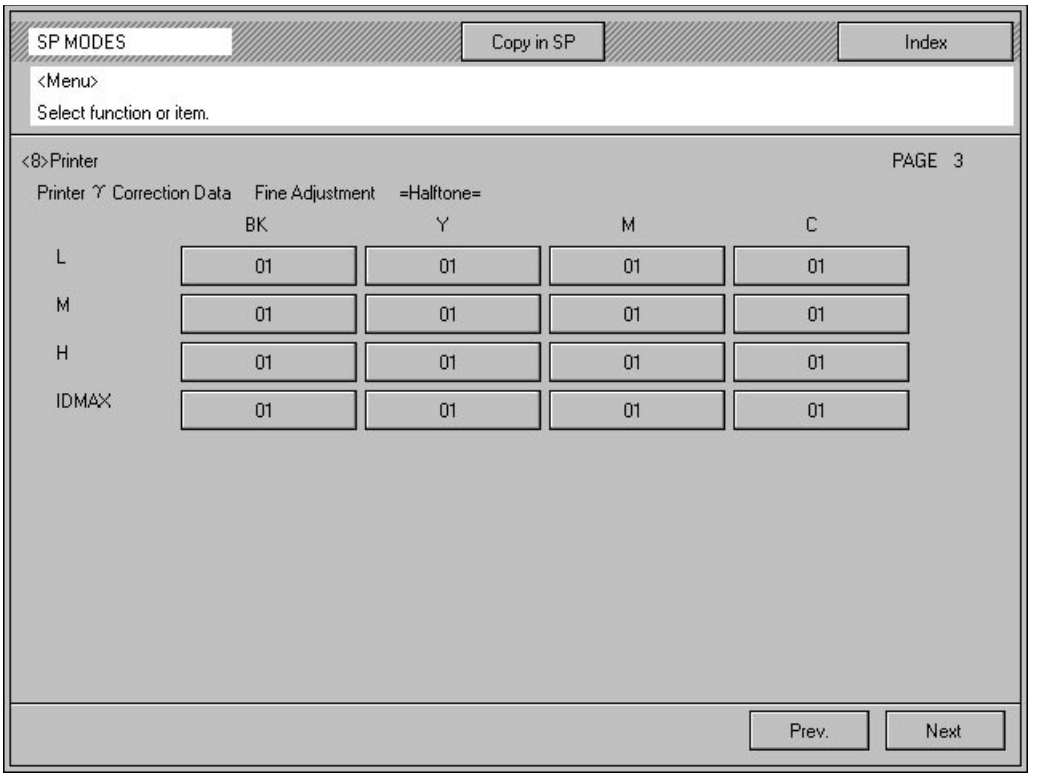
SP MODES
Copy in SP
Index
<Menu>
Select function or item.
<8>Printer
PAGE 3
Printer γ Correction Data Fine Adjustment =Halftone=
BK Y M C
L 01 01 01 01
M 01 01 01 01
H 01 01 01 01
IDMAX 01 01 01 01
Prev.
Next

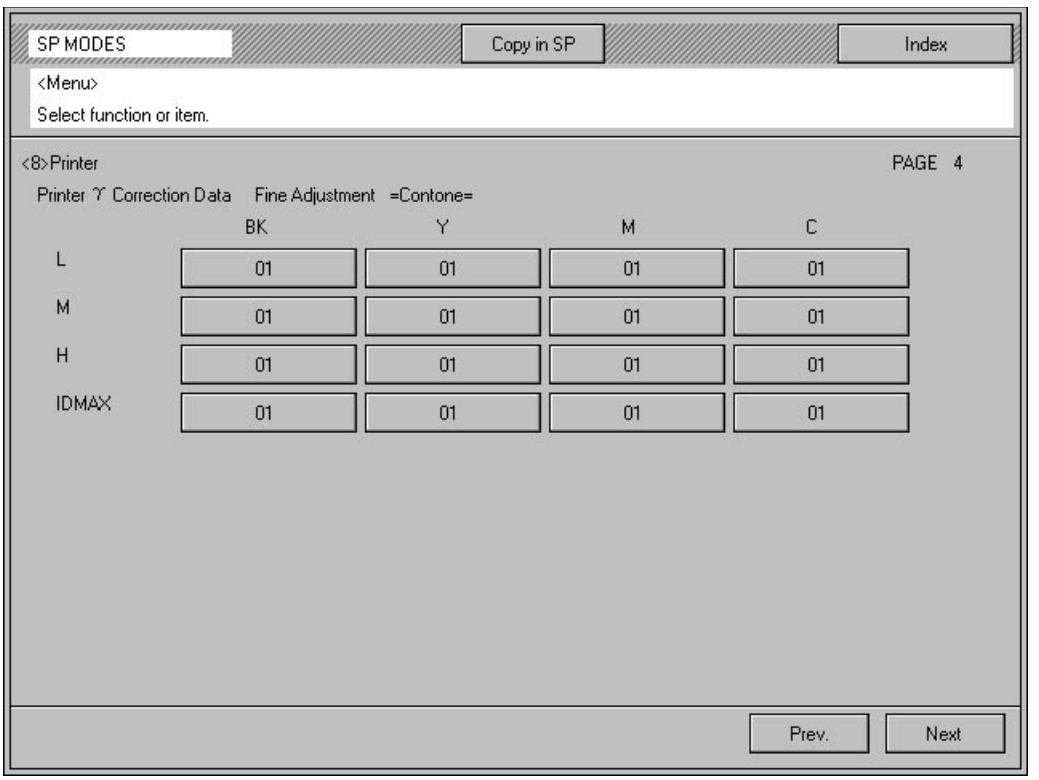
SP MODES
Copy in SP
Index
<Menu>
Select function or item.
<8>Printer
PAGE 4
Printer γ Correction Data Fine Adjustment =Contone=
BK Y M C
L 01 01 01 01
M 01 01 01 01
H 01 01 01 01
IDMAX 01 01 01 01
Prev.
Next

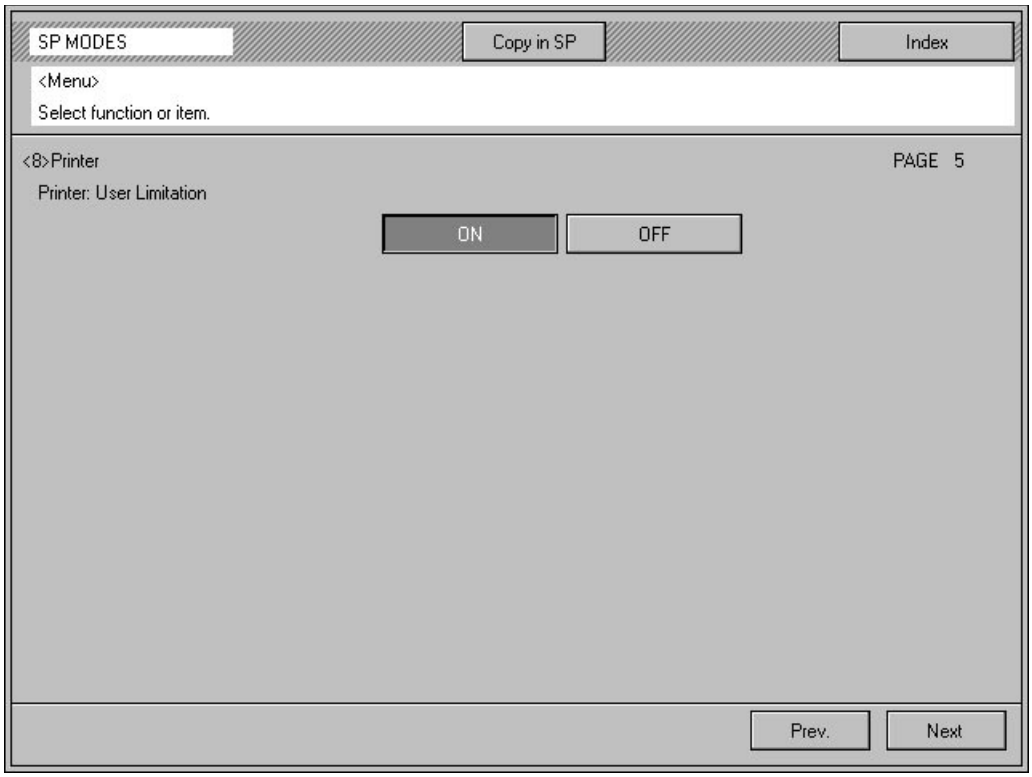

Page	Item	Function	Note
<8> -3	Printer γ Correction Dat. Fine Adjustment =Halftone=	Adjusts each color image density. (Halftone mode fine adjustment)	**Do not adjust in the field.**
<8> -4	Printer γ Correction Dat. Fine Adjustment =Contone=	Adjusts each color image density. (Contone mode fine adjustment)	**Do not adjust in the field.**
<8> -5	Printer: User Limitation	Limits users from the remote terminal.	Default: OFF **Do not change the setting when connected to the Fiery Controller.**

1.2.9 [10] Special Mode Program

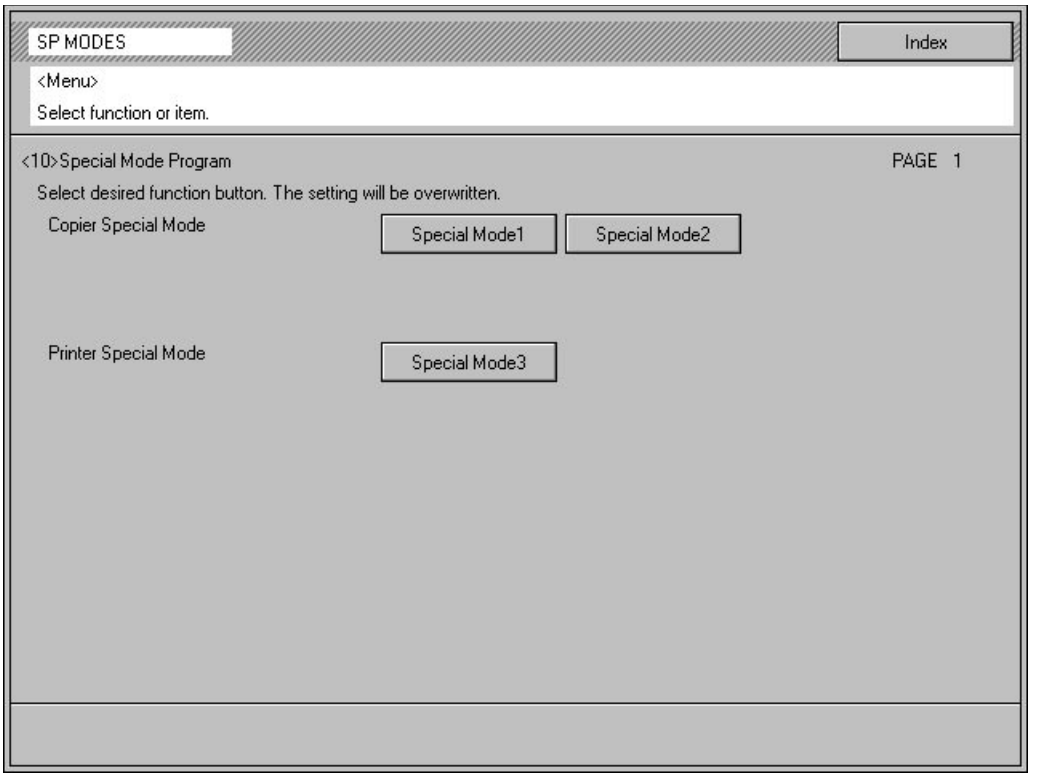

Page	Item	Function	Note
<10> -1	***Copier Special Mode***	Sets the following items for Copier Special Mode 1 and 2. **<1>SP Adjustment** -1: Lead Edge Registration (Printing) -1: Paper Feed Timing -2: Paper Feed Timing: By-pass -3: Face side Fusing Temp. -3: Back side Fusing Temp. -7: Transfer Roller Bias (Normal Humidity) -8: Transfer Roller Coefficient by Humidity Range **<4>SP Special Features** -2: Printer γ Correction Data Rough Adjustment =Letter= -3: Printer γ Correction Data Rough Adjustment =Photo= -4: Printer γ Correction Data Fine Adjustment =Printed Photo= -5: Printer γ Correction Data Fine Adjustment =Glossy Photo= -6: Printer γ Correction Data Fine Adjustment =Letter=	This special mode should be used for user's special application paper which does not have good copy quality with standard settings. "<4>-5: Printer γ Correction Data Fine Adjustment = Glossy Photo=" is not effective (indication only). Special Mode 1 has the following default for very thick paper (about 200 g/m^2): <1>-7:Transfer Roller Bias (Normal Humidity) Normal Paper 1C: 1200 2C: 1500 3C: 1800 4C-L&P: 1500 ***Thick Paper*** ***1C: 1360 2C: 1500*** ***3C: 1800 4C-L&P: 1500*** OHP: S&L 1C: 2020 2C: 2080 3C: 2370 4C-L&P: 2080 Normal: Back 1C: 1200 2C: 1700 3C: 1980 4C-L&P: 1700 ***Thick: Back*** ***1C: 1600 2C: 1830*** ***3C: 2130 4C-L&P: 1830***
	Printer Special Mode	Sets the following items for Printer Special Mode 3. **<1>SP Adjustment** -1: Lead Edge Registration (Printing) -1: Paper Feed Timing -2: Paper Feed Timing: By-pass -3: Face side Fusing Temp. -3: Back side Fusing Temp. -7: Transfer Roller Bias (Normal Humidity) -8: Transfer Roller Coefficient by Humidity Range	This special mode should be used for user's special application paper (Printer mode) which does not have good copy quality with standard settings.

1.2.10 Input Check Mode Table

NOTE:
- Input numbers written in ***bold italic letters*** are newly added items to the base copier (A109).
- Underlined input number items are the same as the base copier (A109) but with a different input number.

Input No.	Sensor/Switch/Signal	Status	
		0	1
1	Charge corona leak detection	Not detected	Detected
2	PCC leak detection	Not detected	Detected
3	Development bias leak detection	Not detected	Detected
4	Bk-Development drive motor lock detection	Not monitoring	Monitoring (Motor rotating)
5	Color-Development drive motor lock detection	Not monitoring	Monitoring (Motor rotating)
6	Drum motor lock detection	Not monitoring	Monitoring (Motor rotating)
7	Transport motor lock detection	Not monitoring	Monitoring (Motor rotating)
8	Cleaning motor lock detection	Not monitoring	Monitoring (Motor rotating)
9	Polygon motor lock detection	Not monitoring	Monitoring (Motor rotating)
10	Bk-Sleeve motor abnormal detection	Not monitoring	Monitoring (Motor rotating)
11	Y-Sleeve motor abnormal detection	Not monitoring	Monitoring (Motor rotating)
12	M-Sleeve motor abnormal detection	Not monitoring	Monitoring (Motor rotating)
13	C-Sleeve motor abnormal detection	Not monitoring	Monitoring (Motor rotating)
14	Paper feed motor lock detection	Not monitoring	Monitoring (Motor rotating)
15	Paper discharge leak detection	Not detected	Detected
16	By-pass feed table sensor	Closed	Open
17	Front door safety switches	Closed	Open
18	LD power supply OFF detection	Not detected	Detected
19	Vertical transport set switches	Closed	Open
20	Bk - Toner end sensor	Not end	End
21	Y - Toner end sensor	Not end	End
22	M - Toner end sensor	Not end	End
23	C - Toner end sensor	Not end	End
24	Toner overflow sensor	Not full	Full
25	Registration guide set sensor	Set	Not set
26	Oil end sensor	Not end	End

Input No.	Sensor/Switch/Signal	Status	
		0	1
27	By-pass paper end sensor	Paper detected	Paper not detected
28	1st paper end sensor	Paper detected	Paper not detected
29	2nd paper end sensor	Paper detected	Paper not detected
30	3rd paper end sensor	Paper detected	Paper not detected
31	Transfer belt position sensor	Release	Touch
32	Transfer roller position sensor	Release	Touch
33	1st lift sensor	Not lifted	Lifted
34	2nd lift sensor	Not lifted	Lifted
35	3rd lift sensor	Not lifted	Lifted
36	1st paper feed sensor	Paper not detected	Paper detected
37	2nd paper feed sensor	Paper not detected	Paper detected
38	3rd paper feed sensor	Paper not detected	Paper detected
39	Registration sensor	Paper not detected	Paper detected
40	Transport sensor	Paper not detected	Paper detected
41	Exit sensor	Paper not detected	Paper detected
42	1st paper size switch-1	Actuated	Not actuated
43	1st paper size switch-2	Actuated	Not actuated
44	1st paper size switch-3	Actuated	Not actuated
45	1st paper size switch-4	Actuated	Not actuated
46	1st paper size switch-5	Actuated	Not actuated
47	2nd paper size switch-1	Actuated	Not actuated
48	2nd paper size switch-2	Actuated	Not actuated
49	2nd paper size switch-3	Actuated	Not actuated
50	2nd paper size switch-4	Actuated	Not actuated
51	2nd paper size switch-5	Actuated	Not actuated
52	By-pass paper size-1	Grounded (Low)	Not grounded (High)
53	By-pass paper size-2	Grounded (Low)	Not grounded (High)
54	By-pass paper size-3	Grounded (Low)	Not grounded (High)
55	By-pass paper size-4	Grounded (Low)	Not grounded (High)
56	3rd tray set switch	Not set	Set

Input No.	Sensor/Switch/Signal	Status	
		0	1
57	By-pass length sensor	Paper not detected	Paper detected
58	Sorter connection detection	Not connected	Connected
59	Toner tank set detection	Set	Not set
201	Scanner H.P. sensor	Not actuated	Actuated (at H.P.)
202	Platen cover position sensor	Not actuated	Actuated (Closed)
203	DF position sensor	Not actuated	Actuated (Closed)

1.2.11 Output Check Mode Table

NOTE:
- Input numbers written in ***bold italic letters*** are newly added items to the base copier (A109).
- Underlined input number items are the same as the base copier but with a different input number (A109).

NOTE: The motors keep turning in this mode regardless of the upper or lower limit sensor signal. Do not keep the electrical component on for a long time, to prevent mechanical or electrical damage.

Output No.	Electrical Component
1	Charge corona with grid - Bk
2	Charge corona with grid - C
3	Charge corona with grid - M
4	Charge corona with grid - Y
5	Development bias - Bk
6	Development bias - C
7	Development bias - M
8	Development bias - Y
9	Transfer belt bias - 1C
10	Transfer belt bias - 2C / 1st color
11	Transfer belt bias - 2C / 2nd color
12	Transfer belt bias - 3C / 1st color
13	Transfer belt bias - 3C / 2nd color
14	Transfer belt bias - 3C / 3rd color
15	Transfer belt bias - 4C / 1st color
16	Transfer belt bias - 4C / 2nd color
17	Transfer belt bias - 4C / 3rd color
18	Transfer belt bias - 4C / 4th color
19	Transfer belt bias (Back side) - 1C
20	Transfer belt bias (Back side) - 2C / 1st color
21	Transfer belt bias (Back side) - 2C / 2nd color
22	Transfer belt bias (Back side) - 3C / 1st color
23	Transfer belt bias (Back side) - 3C / 2nd color
24	Transfer belt bias (Back side) - 3C / 3rd color
25	Transfer belt bias (Back side) - 4C / 1st color
26	Transfer belt bias (Back side) - 4C / 2nd color
27	Transfer belt bias (Back side) - 4C / 3rd color
28	Transfer belt bias (Back side) - 4C / 4th color
29	PCC
30	Drum cleaning bias (BR)
31	Transfer roller bias - Normal paper - 1C
32	Transfer roller bias - Normal paper - 2C
33	Transfer roller bias - Normal paper - 3C
34	Transfer roller bias - Normal paper - 4C (Letter)

Output No.	Electrical Component
35	Transfer roller bias - Normal paper - 4C (Photo)
36	Transfer roller bias - OHP (Lengthwise) - 1C
37	Transfer roller bias - OHP (Lengthwise) - 2C
38	Transfer roller bias - OHP (Lengthwise) - 3C
39	Transfer roller bias - OHP (Lengthwise) - 4C (Letter)
40	Transfer roller bias - OHP (Lengthwise) - 4C (Photo)
41	Transfer roller bias - OHP (Sideways) - 1C
42	Transfer roller bias - OHP (Sideways) - 2C
43	Transfer roller bias - OHP (Sideways) - 3C
44	Transfer roller bias - OHP (Sideways) - 4C (Letter)
45	Transfer roller bias - OHP (Sideways) - 4C (Photo)
46	Transfer roller bias - Thick Paper - 1C
47	Transfer roller bias - Thick Paper - 2C
48	Transfer roller bias - Thick Paper - 3C
49	Transfer roller bias - Thick Paper - 4C (Letter)
50	Transfer roller bias - Thick Paper - 4C (Photo)
51	Transfer roller bias - Normal Paper (Back side) - 1C
52	Transfer roller bias - Normal Paper (Back side) - 2C
53	Transfer roller bias - Normal Paper (Back side) - 3C
54	Transfer roller bias - Normal Paper (Back side) - 4C (Letter)
55	Transfer roller bias - Normal Paper (Back side) - 4C (Photo)
56	Transfer roller bias - Thick Paper (Back side) - 1C
57	Transfer roller bias - Thick Paper (Back side) - 2C
58	Transfer roller bias - Thick Paper (Back side) - 3C
59	Transfer roller bias - Thick Paper (Back side) - 4C (Letter)
60	Transfer roller bias - Thick Paper (Back side) - 4C (Photo)
61	Discharge plate bias - Normal paper
62	Discharge plate bias - OHP
63	Discharge plate bias - Thick paper
64	Discharge plate bias - Normal paper (Back side)
65	Discharge plate bias - Thick paper (Back side)
66	Transfer belt motor (180 mm/sec)
67	Transfer belt motor (90mm/sec)
68	Bk-Development drive motor
69	Color development drive motor
70	Drum motor - Forward
71	Drum motor - Reverse
72	Cleaning motor
73	Polygon motor
74	Bk-Sleeve motor - Forward
75	Bk-Sleeve motor - Reverse
76	Y-Sleeve motor - Forward
77	Y-Sleeve motor - Reverse

Output No.	Electrical Component
78	M-Sleeve motor - Forward
79	M-Sleeve motor - Reverse
80	C-Sleeve motor - Forward
81	C-Sleeve motor - Reverse
82	Y-Toner supply motor - Forward
83	Y-Toner supply motor - Reverse
84	M-Toner supply motor - Forward
85	M-Toner supply motor - Reverse
86	C-Toner supply motor - Forward
87	C-Toner supply motor - Reverse
88	B- Toner supply motor - Forward
89	Bk-Toner supply motor - Reverse
90	1st lift motor - Forward
91	1st lift motor - Reverse
92	2nd lift motor - Forward
93	2nd lift motor - Reverse
94	3rd lift motor - Forward
95	3rd lift motor - Reverse
96	Paper feed motor
97	Transport motor (180 mm/sec)
98	Transport motor (90 mm/sec)
99	Transport fans
100	Development exhaust fan - Low
101	Development exhaust fan - High
102	Fusing exhaust fan - Low
103	Fusing exhaust fan - High
104	Charge inlet fan
105	LD cooling fan
106	Polygon motor cooling fan - Low
107	Polygon motor cooling fan - High
108	IPU cooling fan
109	Optics exhaust fan
110	Cleaning blade solenoid - Touch
111	Cleaning blade solenoid - Release
112	Lubricant bar solenoid - Touch
113	Lubricant bar solenoid - Release
114	Cleaning entrance seal solenoid - Touch
115	Cleaning entrance seal solenoid - Release
116	By-pass pick-up solenoid
117	1st pick-up solenoid
118	2nd pick-up solenoid
119	3rd pick-up solenoid
120	1st separation roller solenoid

Output No.	Electrical Component
121	2nd separation roller solenoid
122	3rd separation roller solenoid
123	Fusing heater - Hot roller
124	Fusing heater - Pressure roller
125	Anti-condensation heater relay (on noise filter board)
126	Main power relay
127	Potential sensor calibration relay (on H.V.S. Board – B)
128	Transfer belt position clutch
129	Transfer roller position clutch
130	Registration clutch
131	By-pass feed clutch
132	1st Feed clutch
133	2nd Feed clutch
134	3rd Feed clutch
135	Quenching lamp
136	Pre-transfer lamp
201	Optics cooling fan
202	Scanner motor current OFF
203	Exposure lamp ON

2. ADMINISTRATOR TOOLS

2.1 ADMINISTRATOR TOOLS ACCESS PROCEDURE

This access procedure is for a key operator (copier's administrator), allowing to access the administrator tools.

The procedure is as follows:

1. Press the **Clear Modes/Stand-by** key.
2. Input "993" using the **Number** keys.
3. Hold down the **Clear/Stop** key for more than three seconds.

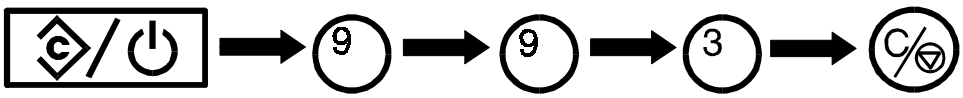

NOTE: This procedure is not described in the operating instructions.

The administrator tools contain the following settings:

[1] Set Operation Modes
Maximum copy number and Auto tray switching

[2] Restrict Color Modes (User code will be required to use restricted modes.)
Full Color / Black / Single Color / Twin color

NOTE: To enable "Restrict Color Modes", set SP mode "<4>-9 Set User Code(s)" to ON and remove the key counter shorting connector.

[3] Set User Code(s)
Register / Change / Delete

[4] Check/Reset Specified Copy Counter

[5] Print All Copy Counters

[6] Reset All Copy Counters

3. TEST POINTS/DIP SWITCHES/LEDS

3.1 MAIN CONTROL BOARD

The function of the test points, DIP switches, and LEDs are the same as those of the base copier (A109).

3.2 IPU BOARD

3.2.1 DIP switches

SW301-1:

Selects the accuracy level of synchronizing the video signal clock (18.6 MHz) with the laser synchronizing signal.
OFF: 1/4 clock ON: 1/10 clock (**MUST BE ON**)

SW301-2:

Designer's use only (**MUST BE OFF**, otherwise the entire background appears dirty.)

SW301-3, 4, 5:

Used by designers for monitoring signals. (NORMALLY OFF)

3.2.2 LEDs

LED 308:

Laser synchronizing signal monitor

LED309:

Monitor for the combination of SW301-3, 4, 5

4. PREVENTIVE MAINTENANCE SCHEDULE

4.1 PM TABLE

NOTE: The numbers mentioned for PM intervals indicate the number of *scans*.
Items written in *italic letters* are different parts from the base copier (A109). Items in tinted columns are newly added parts.

Symbol key: **C**: Clean **R:** Replace **L:** Lubricate **I**: Inspect

ITEM	EM	40K	80K	120K	160K	200K	NOTE
OPTICS							
Platen Cover Sheet	C	C	C	C	C	C	Replace if necessary.
Exposure Glass	C	C	C	C	C	C	Alcohol or glass cleaner
Mirrors, Reflectors		C	C	C	C	C	Cotton pad with water, or blower brush
Lens, Correction Filter		C	C	C	C	C	Blower brush
Exposure Lamp				R			
Scanner Guide Rails		C	C	C	C	C	Dry cloth
Original Size Sensors			C		C		Blower brush
Optics Cooling Fan Filter		R	R	R	R	R	(**NOTE 1**)
PAPER FEED (Main Body)							
Registration Rollers		C	C	C	C	C	Alcohol
Relay Roller (Drive)		C	C	C	C	C	Alcohol
By-pass Pick-up Roller	C	C	C	C	C	R	Water
By-pass Paper Feed Roller	C	C	C	C	C	R	Water
By-pass Separation Roller	C	C	C	C	C	R	Water
By-pass Feed Pad			C		C		Alcohol or water
Paper Feed Guide Plate			C		C		Alcohol or water
Registration Sensor		C	C	C	C	C	Blower brush
PAPER FEED (Paper Supply Unit)							
Paper Guide Plate, Vertical Transport Plate			C		C		Alcohol or water
Pick-up Rollers	C	C	C	C	C	R	Water
Paper Feed Rollers	C	C	C	C	C	R	Water
Separation Rollers	C	C	C	C	C	R	Water
Vertical Transport Rollers			C		C		Alcohol
Vertical Transport Plate			C		C		Alcohol or water
Tray Bottom Plate Pad		C	C	C	C	C	Alcohol or water
DEVELOPMENT							
Developer (Y/M/C/Bk)			R		R		Y/M/C/Bk should be replaced all together.

ITEM	EM	40K	80K	120K	160K	200K	NOTE
Sleeve Roller Side Seals		C	C	C	C	C	Replace if damaged or wavy.
Development Unit Casing		C	C	C	C	C	Dry cloth or vacuum cleaner (**ATTENTION 1**)
Development Drive Gears		C	C	C	C	C	Blower brush or vacuum cleaner
Toner Supply Receptacles, Toner Supply Joints		C	C	C	C	C	Dry cloth or vacuum cleaner
Toner Tank Cover, Toner Bottle Guides		C	C	C	C	C	Dry cloth or vacuum cleaner
Development Duct Lower Filter		C	C	C	C	C	Blower brush or vacuum cleaner Replace if necessary. (**NOTE 1**)
Development Filter		R	R	R	R	R	(**NOTE 1**)
Development Ozone Filter		R	R	R	R	R	(**NOTE 1**)
Development Exhaust Fan Filters		R	R	R	R	R	(**NOTE 1**)
AROUND THE DRUM							
Charge Corona Wire	C	C	R	C	R	C	Clean with dry cloth.
Charge Corona Grid	C	C	R	C	R	C	Blower brush, water, then dry cloth (**ATTENTION 2**)
Corona Wire/Grid Cleaner		R	R	R	R	R	
Wire/Grid Cleaner Spiral Shaft		C	C	C	C	C	Wet cotton
Charge corona casing	C	C	C	C	C	C	Wet cotton and dry cloth
Charge corona end blocks	C	C	C	C	C	C	Dry cloth
Quenching Lamp	C	C	C	C	C	C	Dry cloth
Drum Potential Sensor		C	C	C	C	C	Blower brush and dry cloth
ID Sensor		C	C	C	C	C	Dry cloth
Charge Inlet Fan Filter		R	R	R	R	R	(**NOTE 1**)
DRUM CLEANING							
Cleaning Blade		R	R	R	R	R	Dust with setting powder after replacement or cleaning.
Cleaning Brush		I	R	I	R	I	Inspect if the brush functions properly.
Bias Roller Blade		C	R	C	R	C	Dust with setting powder after replacement or cleaning.
Drum Lubricant Bar		R	R	R	R	R	Replace if damaged (holes, dents, or cracks).

ITEM	EM	40K	80K	120K	160K	200K	NOTE
Cleaning Bias Roller			C		C		Dry cloth or alcohol Dust with setting powder.
Cleaning Side Seals, Casing		C	C	C	C	C	Dry cloth
Cleaning Entrance Seal	I	C	C	C	C	C	Blower brush and dry cloth Replace if it is wavy.
PCC Wire	C	C	R	C	R	C	Dry cloth
PCC Casing	C	C	C	C	C	C	Water and dry cloth
PCC End Blocks	C	C	C	C	C	C	Dry cloth
TRANSFER BELT / TRANSFER ROLLER							
Transfer Belt		R	R	R	R	R	Perform Belt Cleaning (SP<2>-3) after replacement.
Transfer Belt Unit Rollers		C	C	C	C	C	Alcohol
Transfer Belt Release Cams		L	L	L	L	L	Silicone Grease G40M (**NOTE 2**)
Belt Bias Roller Shaft		L	L	L	L	L	Silicone Grease G40M (**NOTE 2**)
Transfer Roller	I	I	I	I	I	I	Replace if the surface is damaged.
Transfer Roller Shaft		L	L	L	L	L	Silicone Grease G40M (**NOTE 3**)
Transfer Roller Blade			R		R		
Toner Catch Pan		C	C	C	C	C	Vacuum cleaner
Transfer Roller Entrance Seal		C	C	C	C	C	Dry cloth
Paper Discharge Plate		R	R	R	R	R	
Roller Lubricant Bar		R	R	R	R	R	Replace if damaged (holes, dents, or cracks).
TRANSFER BELT CLEANING							
Cleaning Blade		R	R	R	R	R	Dust with setting powder after replacement.
Cleaning Entrance Seal	I	C	C	C	C	C	Replace if damaged or wavy.
Cleaning Side Seals		C	C	C	C	C	Vacuum cleaner
Toner Catch Seals		C	C	C	C	C	Vacuum cleaner
Cleaning Unit Casing		C	C	C	C	C	Dry cloth
Belt Lubricant Bar		R	R	R	R	R	Replace if damaged (holes, dents, or cracks).
FUSING UNIT							
Hot Roller		R	R	R	R	R	(**NOTE 4**)
Heat Isolating Bushing		L	L	L	L	L	Barrierta L55/2 (**NOTE 4**)

ITEM	EM	40K	80K	120K	160K	200K	NOTE
Hot Roller Ball Bearing		C	C	C	R	C	Clean with dry cloth. (**NOTE 4**)
Pressure Roller, Pressure Roller Ball Bearing					R		Barrierta L55/2 (**NOTE 5**)
Oil Blade		C	R	C	R	C	Suitable solvent Apply silicone oil on the edge after cleaning or replacement.
Oil Supply Pad		R	R	R	R	R	
Oil Sump					C		Dry cloth and alcohol
Hot Roller Stripper		C	C	C	C	C	Suitable solvent Apply silicone oil on the top after cleaning.
Fusing Thermistor, Pressure Roller Thermistor		C	C	C	C	C	Suitable solvent Apply silicone oil on the surface after cleaning.
Oil Tank		I	C/L	I	C/L	C/L	Add silicone oil after removing paper dust with a pipette.
Fusing Drive Gears			L		L		Mobil Temp. 1 or 78 (**NOTE 4**)
Cleaning Roller, Cleaning Roller Scraper		C	C	C	C	C	Suitable solvent
Pressure Roller Cleaning Roller		C	C	C	C	C	Suitable solvent
OTHERS							
Transport Belts		C	C	C	C	C	Alcohol
Toner Collection Bottle	I	C	C	C	C	C	Clean at EM if necessary.
Inner Cooling Fan Filter		R	R	R	R	R	(**NOTE 1**)
OPTIONAL EQUIPMENT							
SORTER (A511) (Number of Copies)							
Transfer Rollers	C	C	C	C	C	C	Alcohol
Exit Rollers	C	C	C	C	C	C	Alcohol
Gears and Bushings	(L)	(L)	(L)	(L)	(L)	(L)	Lubricate if noisy.
DUAL JOB FEEDER (A376) (Number of Originals)							
ITEM	**EM**	**48K**	**96K**	**144K**	**192K**	**240K**	**NOTE**
Transport Belt	C	R	R	R	R	R	Belt cleaner Replace if necessary.
Pick-up Roller	C	C	C	C	C	C	Alcohol Replace if necessary.
Feed Roller	C	R	R	R	R	R	Alcohol Replace if necessary.

ITEM	EM	48K	96K	144K	192K	240K	NOTE
Separation Belts	C	R	R	R	R	R	Alcohol Replace if necessary.
Registration, Original width, and Feed-out Sensors	C	C	C	C	C	C	Blower brush

ATTENTION

1. When cleaning the development unit with a vacuum cleaner, always ground the casing with your fingers to avoid damaging the toner density sensor with static electricity.

2. When cleaning and drying the charge corona grid with cloth, be careful not to damage the grid by letting it catch fibers.

NOTE 1: Filters

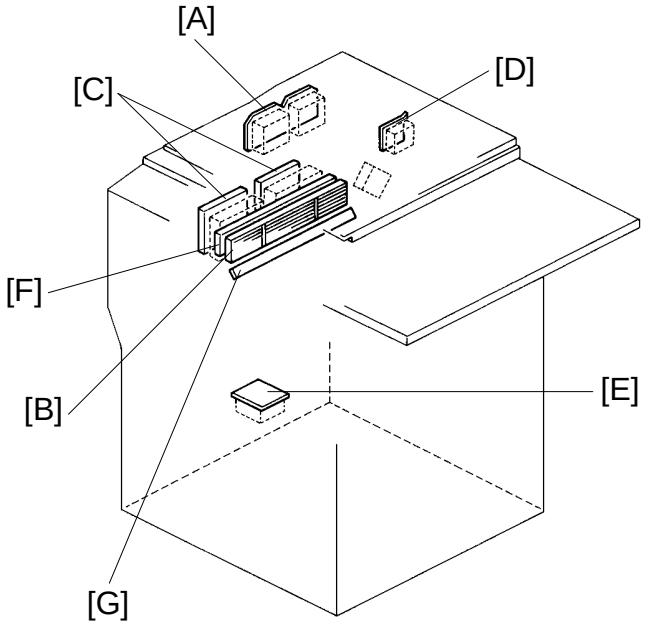

A172M500.img

The locations of the filters which should be cleaned or replaced at PM are shown above.

1. Dust filters to be replaced at 40 K PM:
   - Optics cooling fan filter [A]
   - Development filter [B]
   - Development exhaust fan filters [C]
   - Charge inlet fan filter [D]
   - Inner cooling fan filter [E]
2. Ozone filters to be replaced at 40 K PM:
   - Development ozone filter [F]
3. Dust filter to be cleaned at 40 K PM:
   - Development duct lower filter [G]

NOTE 2: Transfer Belt Unit

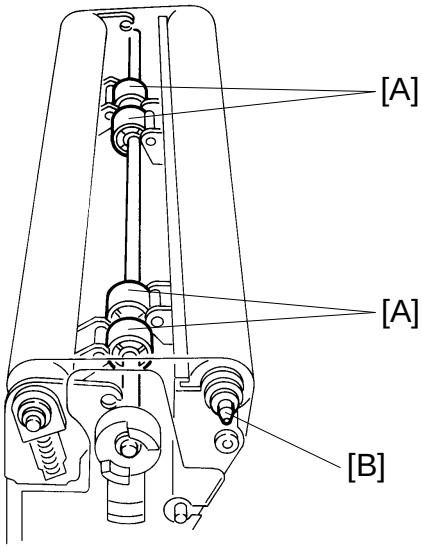

A172M501.img

The following parts should be lubricated with silicone grease G40M every 40K scans:

- Transfer belt release cams [A]
- Belt bias roller shaft [B] (only at the end)

NOTE 3: Transfer Roller Unit

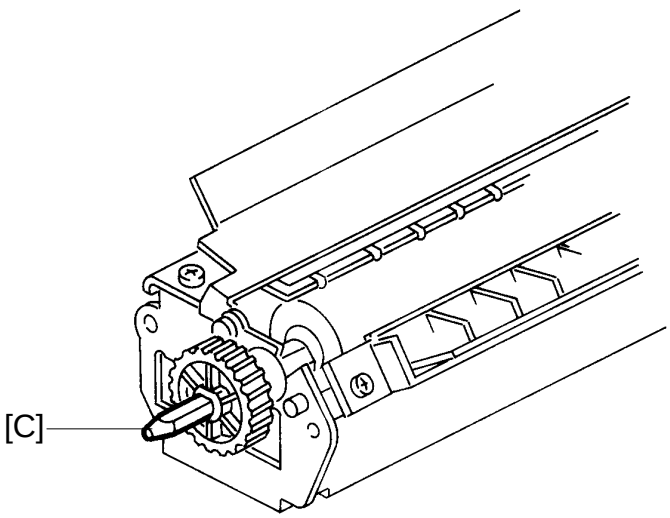

A172M502.img

The end of the transfer roller shaft [C] should be lubricated with silicone grease G40M every 40 K scans.

NOTE 4: Fusing Unit 1

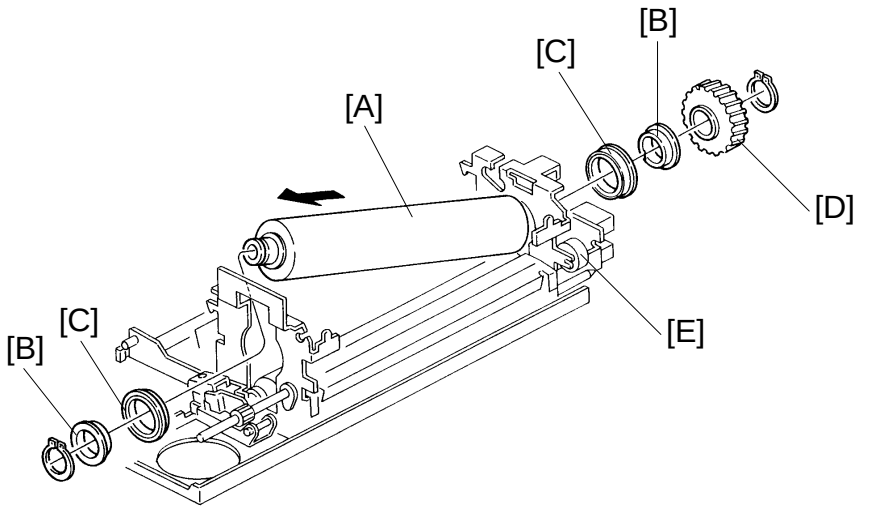

A172M503.img

When replacing the hot roller [A] every 40 K scans, lubricate the inner and outer surface of the heat isolating bushings [B] with Barrierta L55/2. The ball bearings [C] for the hot roller should be cleaned with a dry cloth every 40 K scans and should be replaced every 160 K scans. The fusing drive gears [D, E] should be lubricated with Mobil Temp. 1 or 78 every 80 K scans.

NOTE: 5 Fusing Unit 2

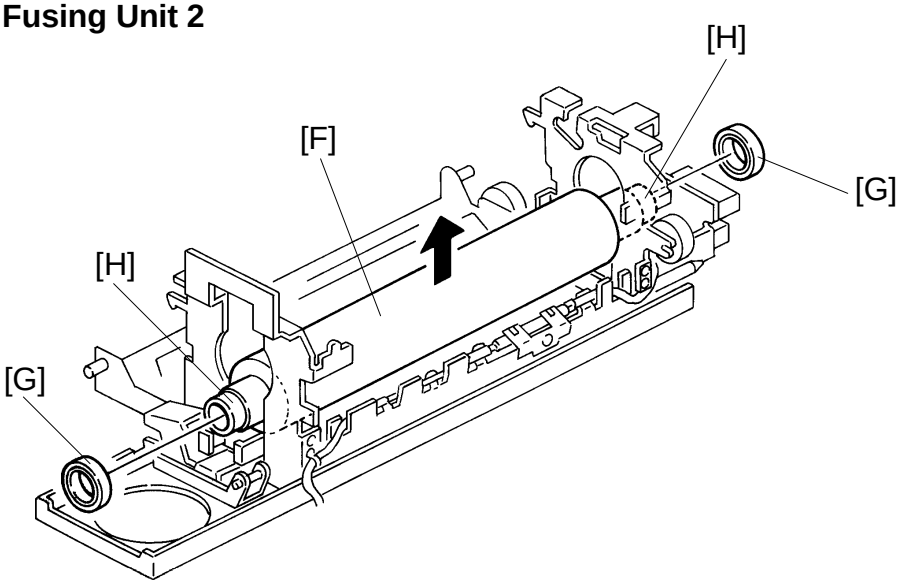

A172M504.img

When replacing the pressure roller [F] and its ball bearings [G] every 160 K scans, lubricate the roller shaft [H] and inner surface of the ball bearings with Barrierta L55/2.

SECTION 5

REPLACEMENT AND ADJUSTMENT

1. COLOR BALANCE ADJUSTMENT

1.1 AUTO COLOR CALIBRATION (ACC)

1.1.1 Calibration Procedure

Perform the Auto Color Calibration (ACC) at installation, every service call, or after replacing the drum or the developer.

1. Press the **User Tool** key on the operation panel.
2. Select **No. 2: Sensitivity Adjustment**.

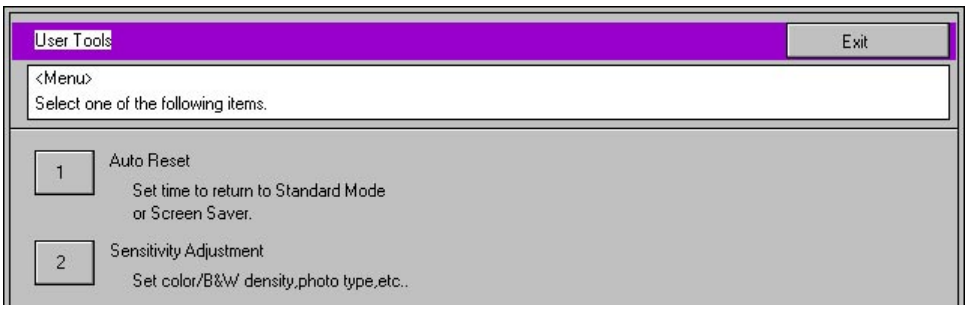

3. Press the Yes key [A].

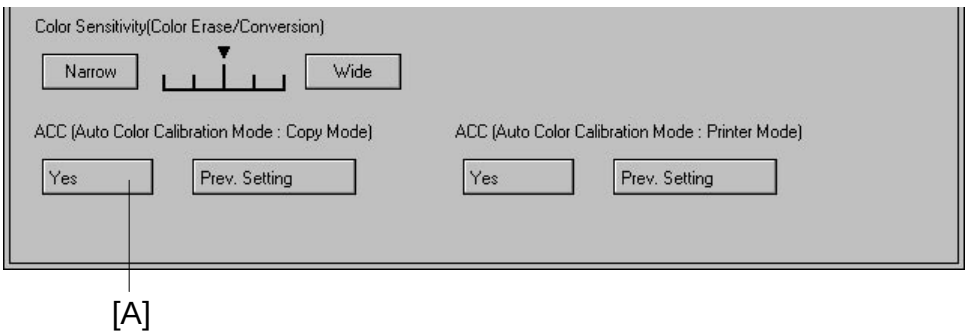

4. Press the **Print Start** key [B]. A test pattern will be printed. It will be printed on A4 or 8$\frac{1}{2}$" x 11" sideways. If there is no paper of these sizes available, it will be printed on a larger size.

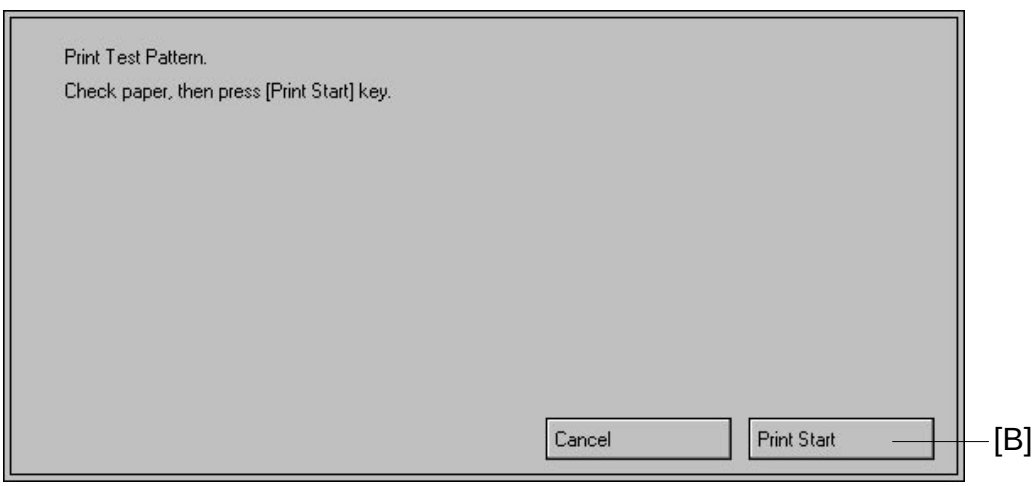

5. Place the test pattern on the exposure glass as shown in the illustration. If the copier is equipped with an optional dual job feeder, put the test pattern face-up on top of several sheets of white paper of the same size. Then place all the sheets face-down on the exposure glass.

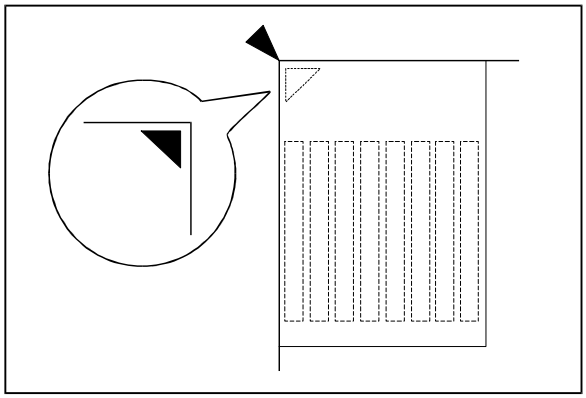

A172R523.wmf

6. Press the **Scan Start** [C] key.
   The γ correction data will be automatically adjusted.

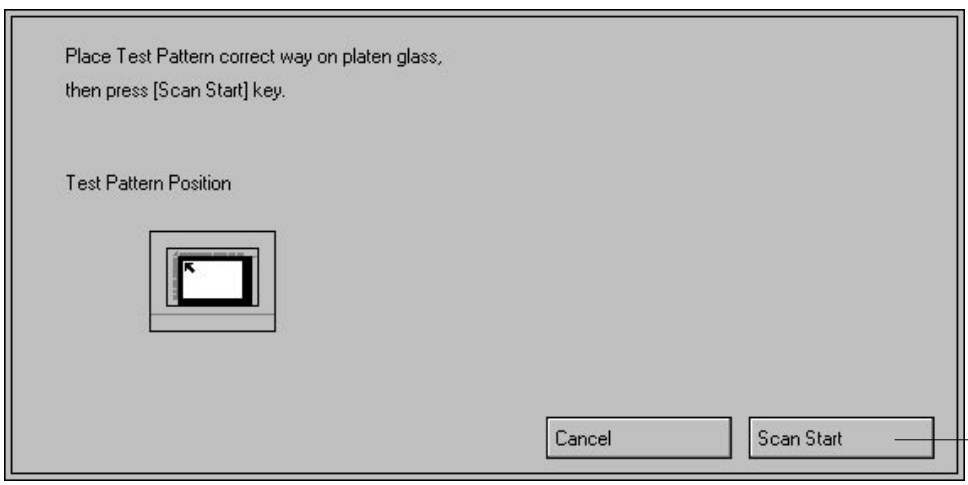

7. Make copies using the C-4 Test chart in letter mode and printed photo mode.
8. Compare the copies made before the ACC (Auto Color Calibration) and after the ACC.

- If necessary, adjust the machine as shown in the following flow chart.

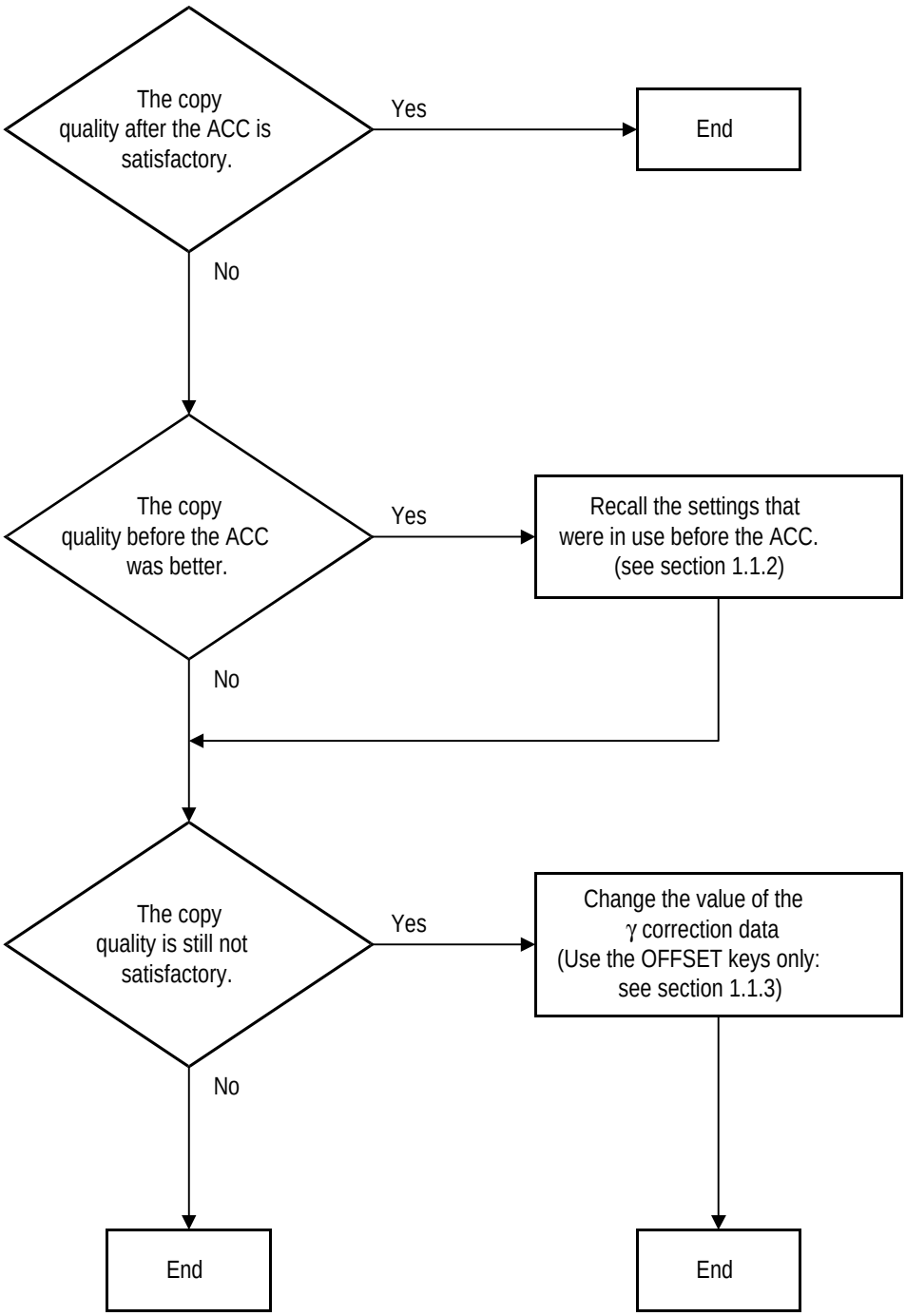

A172R505.wmf

1.1.2 To recall the settings that were in use before the ACC

Touch the **Prev. Setting** [A] key.

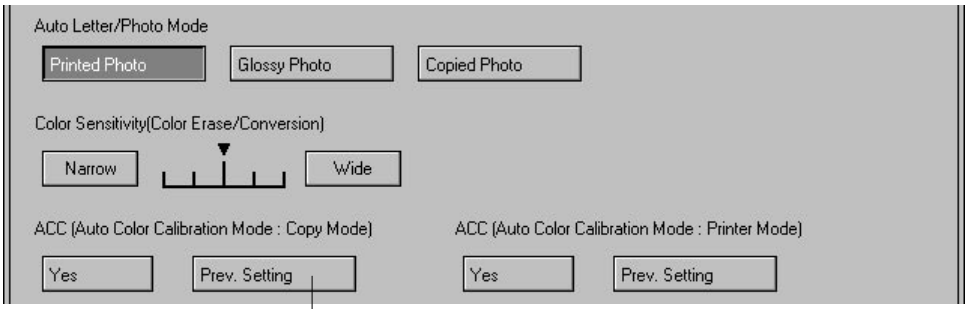

[A]

(Also, from the SP mode, the previous settings can be recalled by touching the **Recall from Temporary Memory** [B] key.)

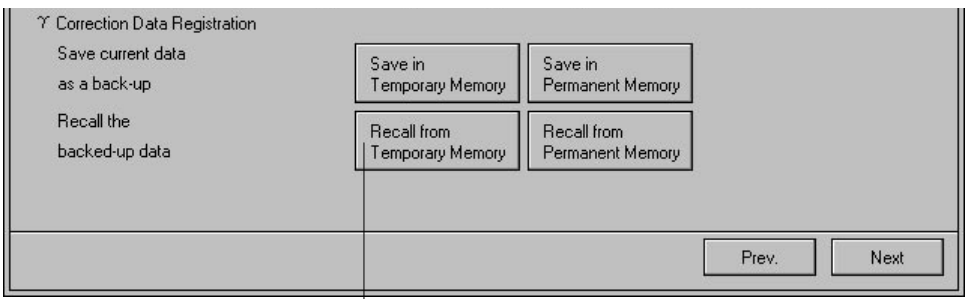

[B] (SP Mode No. 4 Special Feature, Page 2)

1.1.3 To change the value of the γ correction data

1. Enter the SP mode and touch **No. 4 SP Special Feature**.
2. Go to page 2 (letter mode) or page 3 (photo mode) and change the OFFSET values. (Refer to the tables on the next page.)

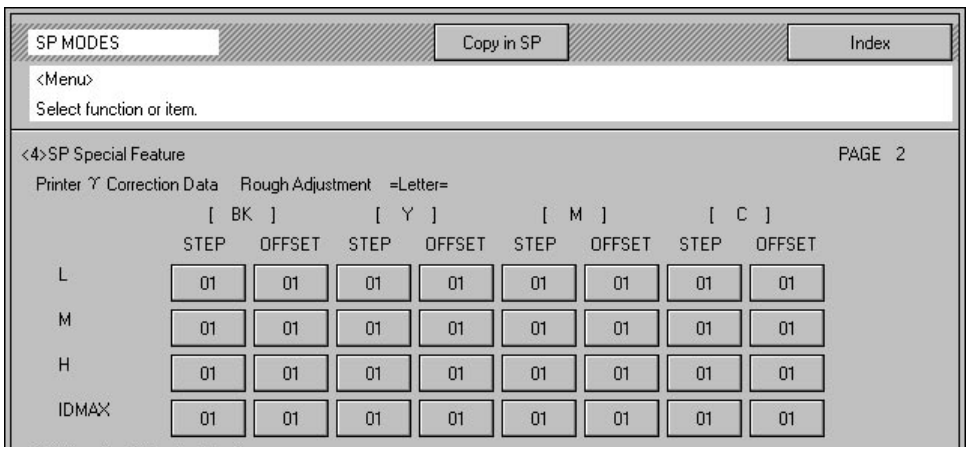

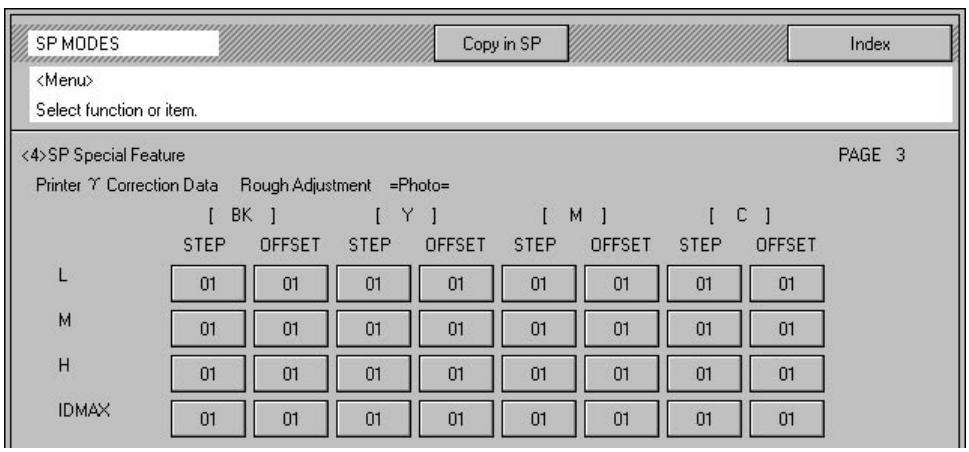

NOTE: Always adjust the color balance using the "OFFSET" keys only. Do not change the values in the "STEP" column.

3. To finish the operation, touch the **Index** [B] key to return to the SP mode menu. Touch the **Exit** key to exit the SP mode.

- To back up the current settings, refer to the information in chapter 4, "Service Tables".

— STANDARD COPY QUALITY IN LETTER MODE —

Step No.	Key to Adjust	Level to Refer to on the C-4 Chart	Adjustment Standard
1	ID MAX for each color	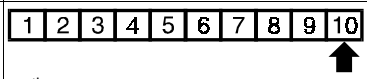 10th level of the color scale	Adjust the ID of the 10th level to the same value as the C-4 test chart.
2	MIDDLE ID for each color	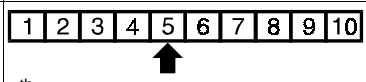 5th level of the color scale	Adjust the ID of the 5th level to the same value as the C-4 test chart.
3	HIGH ID for each color	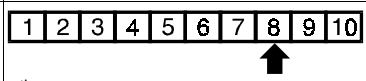 8th level of the color scale	Adjust the ID of the 8th level to the same value as the C-4 test chart.
4	LOW ID for each color	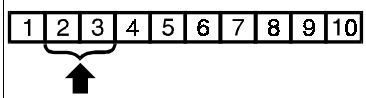 2nd and 3rd level of the color scale	Adjust the ID so that the 2nd level is not visible, and the 3rd level is the same value as the C-4 test chart.

NOTE: If the customer tends to use the "3 COLOR" mode in the user tools frequently, perform the following color balance adjustment.

1) Enter the User Tools.
2) Open Sensitivity Adjustment "Color Mode" and select "3C".
3) Exit the User Tools and take a full color copy in the letter mode.
4) Adjust the black scale level 3 to 5 (LOW ID) by combining cyan, magenta, and yellow ID's to an acceptable shade of gray.

— STANDARD COPY QUALITY IN PHOTO MODE —

Step No.	Key to Adjust	Level to Refer to on the C-4 Chart	Adjustment Standard
1	ID MAX for each color	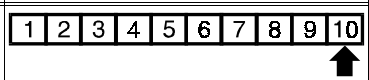 10th level of the color scale	Adjust the ID of the 10th level to the same value as the C-4 test chart.
2	MIDDLE ID for each color	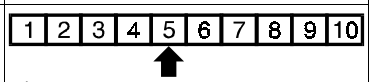 5th level of the color scale	Adjust the ID of the 5th level to the same value as the C-4 test chart.
3	HIGH ID for each color	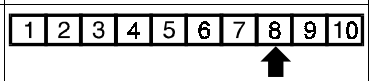 8th level of the color scale	Adjust the ID of the 8th level to the same value as the C-4 test chart.
4	LOW ID for each color	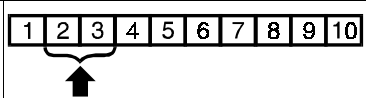 2nd and 3rd level of the color scale	Adjust the ID so that the 2nd level is slightly (just) visible and the 3rd level is the same as the C-4 test chart.
5	Low ID of Y, M, C	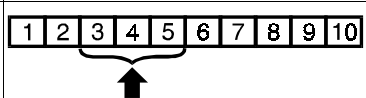 3rd, 4th, and 5th level of the **black** scale	The levels should be an acceptable shade of grey.

2. LASER UNIT

2.1 WARNING

⚠ DANGER

Turn off the main switch and unplug the machine before attempting any of the procedures in this section. Laser beams can seriously damage your eyes.

– CAUTION DECAL –

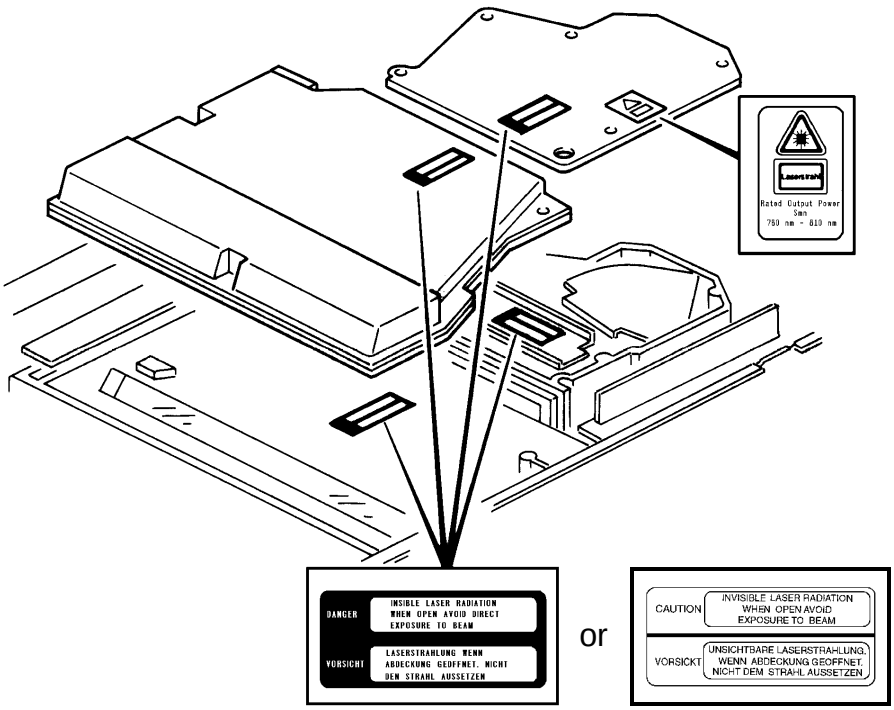

A172R543.img

Five caution decals are located in the laser unit, as shown.

3. DRUM UNIT

3.1 CHARGE CORONA WIRE AND WIRE CLEANER PAD REPLACEMENT

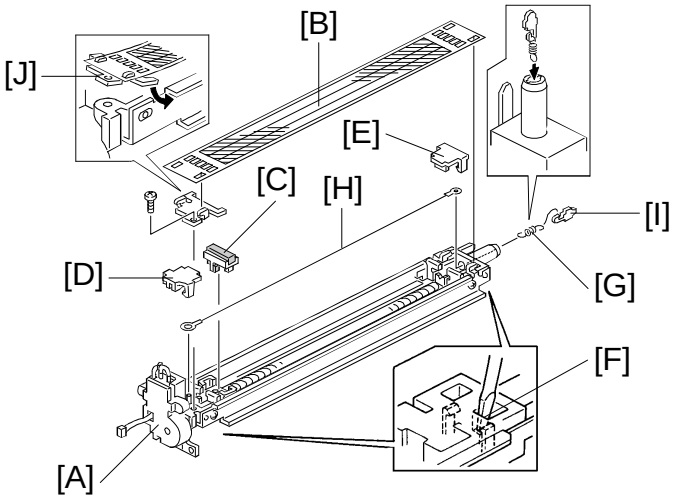

A172R506.wmf

1. Take out the charge corona unit [A]. (See A109 Drum Unit Removal.)
2. Remove the grid plate [B] (1 screw).
3. Remove the wire cleaner [C].
4. Remove the front end block cover [D] and the rear end block cover [E] by using a small screwdriver at the rear of the unit as in [F].
5. Remove the terminal spring [G] and then remove the charge corona wire [H].

   NOTE: When reinstalling, do the following.

   1) Hook the spring [G] to the bias terminal [I].
   2) Install the two parts down through the hole as shown.
   3) Hook the corona wire [H] to the spring.
   4) Hook the other end of the wire [H].
   5) Snap in both end block covers [D], [E].
   6) Set the wire cleaner [C] so that the corona wire runs between the cleaner pads.
   7) Install the grid plate [B] using the holder bracket [J], making sure that the hooks lie under the casing as shown (1 screw).
6. If the grid plate, casing, or the corona wire were replaced or cleaned, perform the "Process Control Self Check" (SP Test Mode P-4).

3.2 DRUM LUBRICANT BAR REPLACEMENT

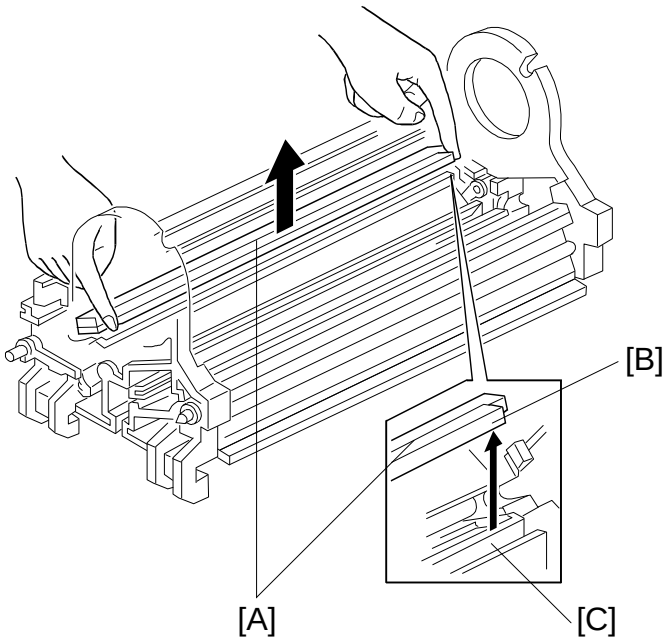

A172R508.wmf

1. Remove the cleaning brush. (See A109 Cleaning Brush Replacement.)
2. Remove the drum lubricant bar [A] as shown.

   NOTE: When reinstalling make sure that the lubricant plate [B] lies over the unit frame [C] as shown.

3.3 WIRE CLEANER MOTOR REPLACEMENT

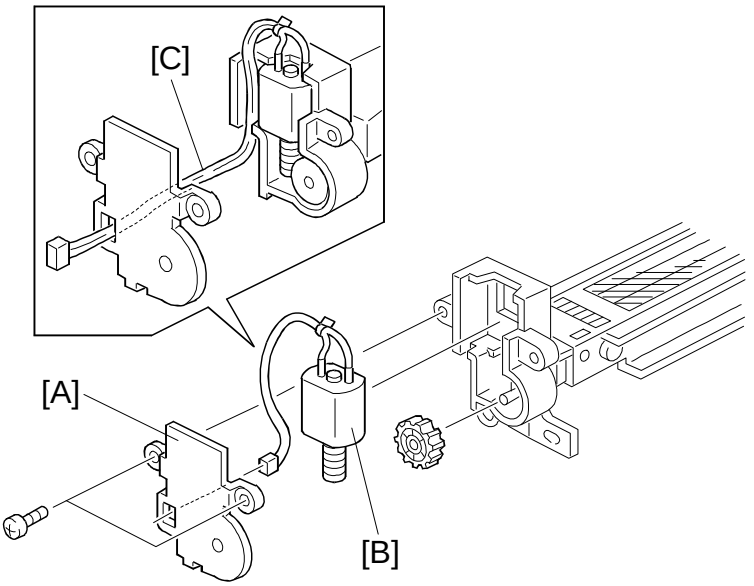

A172R509.wmf

1. Remove the toner tank.
2. Remove the cleaner motor cover [A] (2 screws) and remove the wire cleaner motor [B].

   NOTE: When reinstalling, route the harness [C] as shown.

3.4 INSTALLING A NEW DRUM

NOTE:
- The installation procedure for a new drum is the same as for the base copier (A109) except the following steps which come after turning on the main switch.
- The steps from 3 to 12 are to apply lubricant to the new drum surface. These steps can all be replaced by just making 10 copies of the C-4 Test Chart on A3 (11"X17") paper.
- If the developer is replaced together with the OPC drum, steps 3 to 12 are unnecessary because lubricant is applied to the drum surface during the developer initialization.

1. Replace the OPC drum with a new one and reassemble the copier.
2. Turn on the main switch.
3. Place a few sheets of A3 (11"X17") white paper and close the platen cover (DJF).
4. Enter the SP mode and open [2]SP Test, page 1.

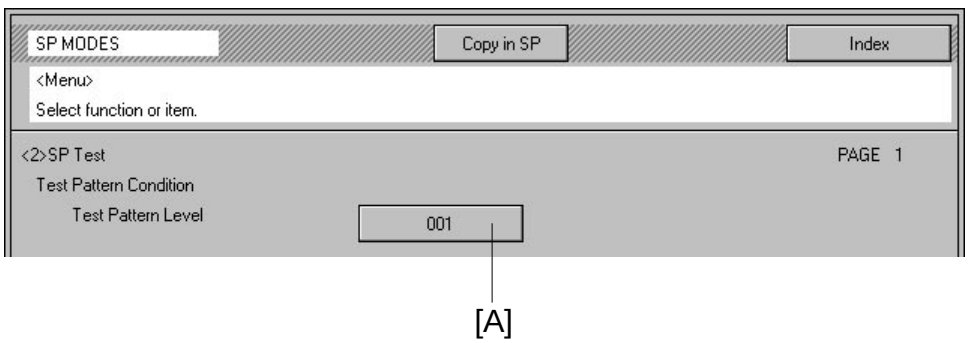

5. Set the **Test Pattern Level** [A] to "*30*".

NOTE: If the test pattern level is too high, a lot of toner will be consumed and toner scattering will occur inside the machine.

6. Open [2]SP Test, page 2.

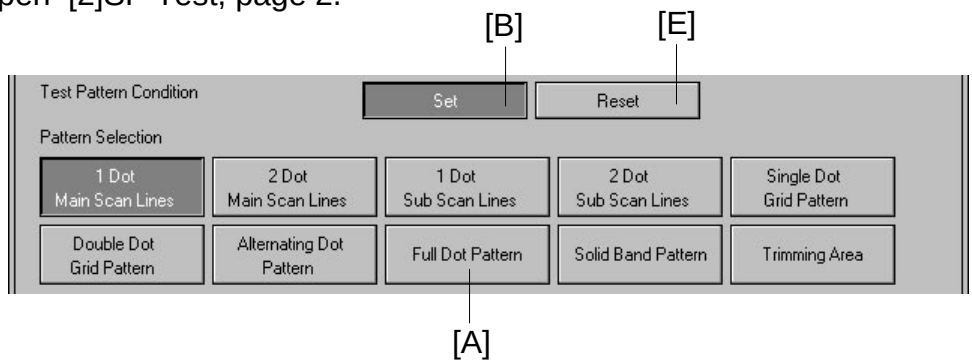

7. Select "*Full Dot Pattern*" [A] in **Pattern selection** and select "*Set*" [B] in **Test Pattern Condition**.

8. Touch the "Copy in SP" key and select "*Black*" copy mode.

9. Touch the "SP MODES" key and open [2]SP Test, page 5.

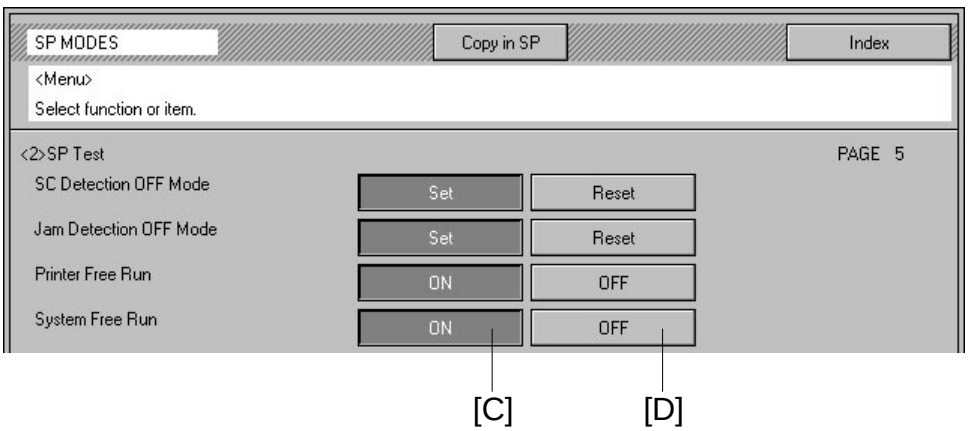

10. Start the **System Free Run** by touching "*ON*" [C] and wait for 6 to 7 minutes.

11. Stop the System Free Run by touching "*OFF*" [D].

12. Open [2]SP Test, page 2 and select "*Reset*" [E] for **Test Pattern Condition**.

13. **Wait for 5 minutes** and open [2]SP Test, page 4.

14. Perform **Process Control Selfcheck** by touching "*Start*".

15. Check the result of Process Control Selfcheck referring to the installation procedure and exit the SP mode.

16. Perform Auto Color Calibration.

4. DEVELOPMENT SECTION

4.1 DEVELOPER COLLECTION

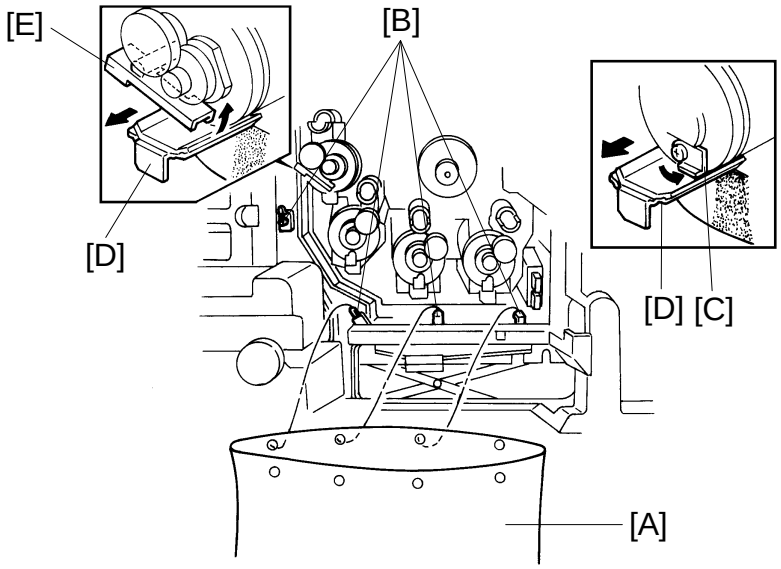

A172R510.img

NOTE:
- The machine must be at the "READY" condition to perform the developer collection.
- To maintain good color copy quality, developer replacement should be performed for all colors at the same time so that all the developers have similar characteristics.
- For more detailed information concerning access to SP modes, refer to section 4 (Service Program Mode Operation).
- Before performing this procedure, place old newspapers on the floor to keep the customer site clean.
- Collect 2 developers per bag (black and cyan, magenta and yellow).

1. Open the front door and remove the toner tank unit (2 screws).
2. Place the developer collection bag [A] on the hooks [B] on the copier frame.
3. Turn on the front safety switch using the accessory switch actuator. Wait until the machine is at the 'READY' condition.
4. Swing over the stopper bracket [C] then pull the collection cover [D] of the desired development unit. Developer will fall into the bag.

   NOTE: For black developer, shift the lever [E] instead of the stopper bracket [C].

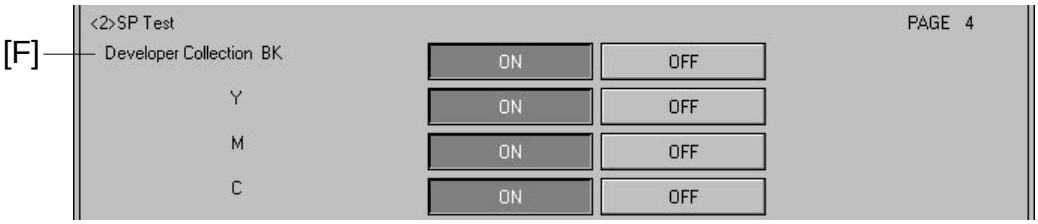

5. Enter SP mode and open SP Test Mode P-4 (Developer Collection) [F].
6. Press "ON" for the desired developer to be collected.

   NOTE: Support the developer bag [A] while performing this procedure.
7. Wait until the developer is collected completely (about 2 to 3 minutes) and press "OFF".
8. Perform the same procedure for the other developers.
9. Reinstall the collection cover [D].

   NOTE: For black developer, make sure to shift back the lever.

4.2 DEVELOPER INSTALLATION

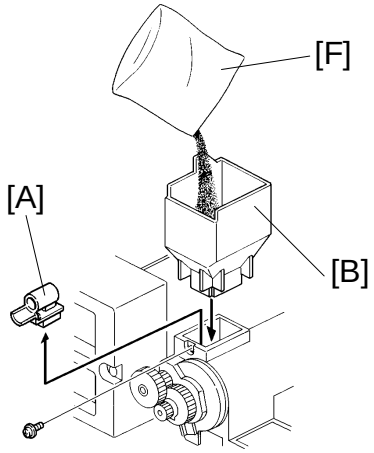

A172R511.img

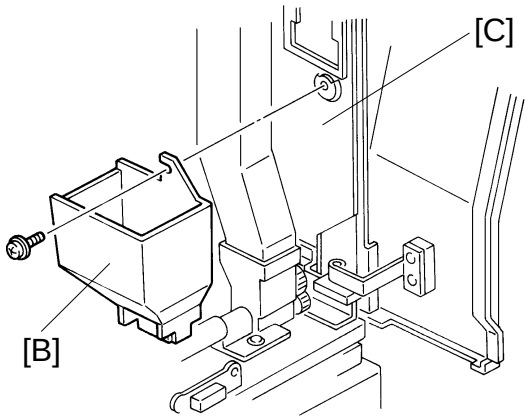

A172R512.img

1. From the Developer Collection procedure step number 9 condition, remove all the toner supply receptacles [A] (1 screw).
2. Remove the right inner cover. (See A109 Right Inner Cover Removal.)
3. Remove the developer supply funnel [B] from the bracket [C] and clean the inner surface.
4. Set the developer supply funnel on the black development section as shown.
5. Open SP Test Mode P-4 (Output Check).
6. Touch the key [D], to enter the output mode.
7. Enter "68" with the number keys, then touch the key [D] again to select test mode #68 "black development drive motor ON".
8. Touch the Start key [E].
9. Shake a pack of black developer [F] 20 times then pour it in.
10. 1 minute after pouring the developer, touch the stop key [G].

NOTE: Do not touch the stop key within 1 minute, otherwise, the developer will not be distributed evenly in the development unit.

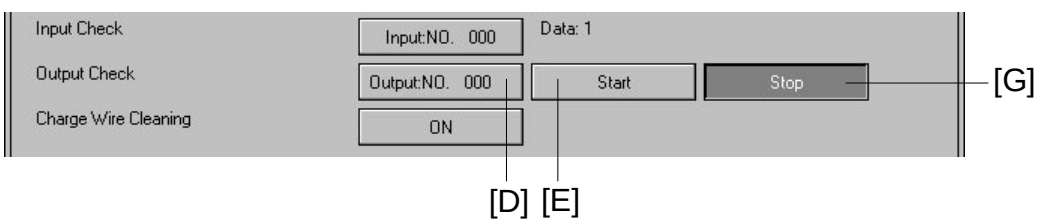

Replacement Adjustment

11. Remove the developer supply funnel, then install the toner supply receptacle.
12. Install the cyan, magenta and yellow developer in the same manner as black developer installation (step #3 to #11).

    NOTE: To select the "color development drive motor ON" mode, enter "69" for color instead of 68 for black (refer to step #7).
13. Return the developer supply funnel to the original position.
14. Touch the Previous key [A] to open page 3.

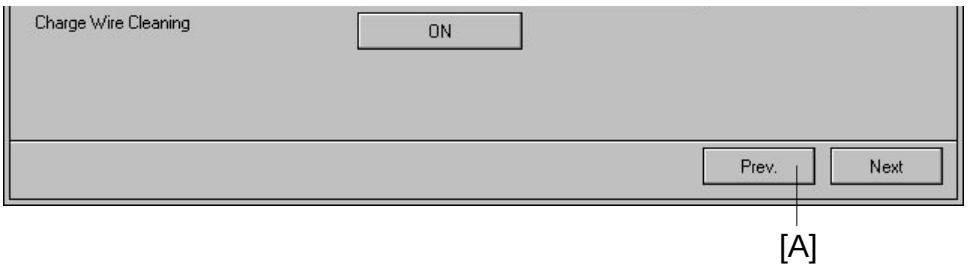

15. Perform the developer initial setting as follows.
    1) Confirm that the main charge corona, PCC, ID sensor boards are installed correctly (1 screw each).
    2) Confirm that the toner tank is not installed.

    NOTE: If the toner tank is installed, toner is supplied during the developer initial setting and the machine cannot figure out the proper toner concentration of the new developer.

    3) Touch the All Start key [B] to start the developer initial setting. After the adjustment is completed, the machine stops automatically.
16. Touch the Index key [C].

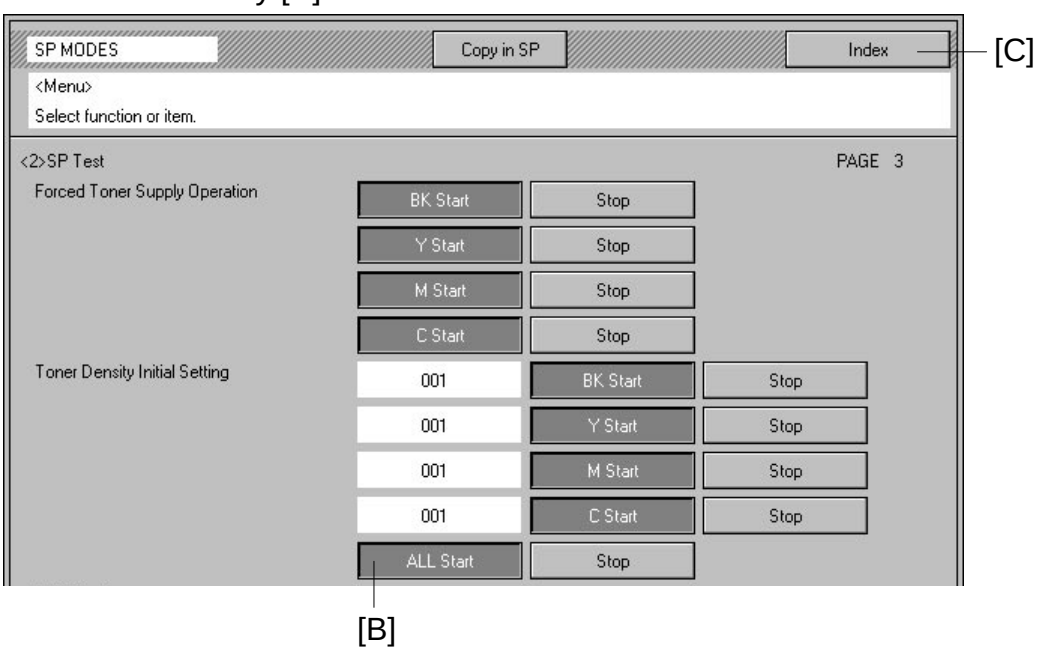

17. Open SP Data Output P-1 (Toner Density).

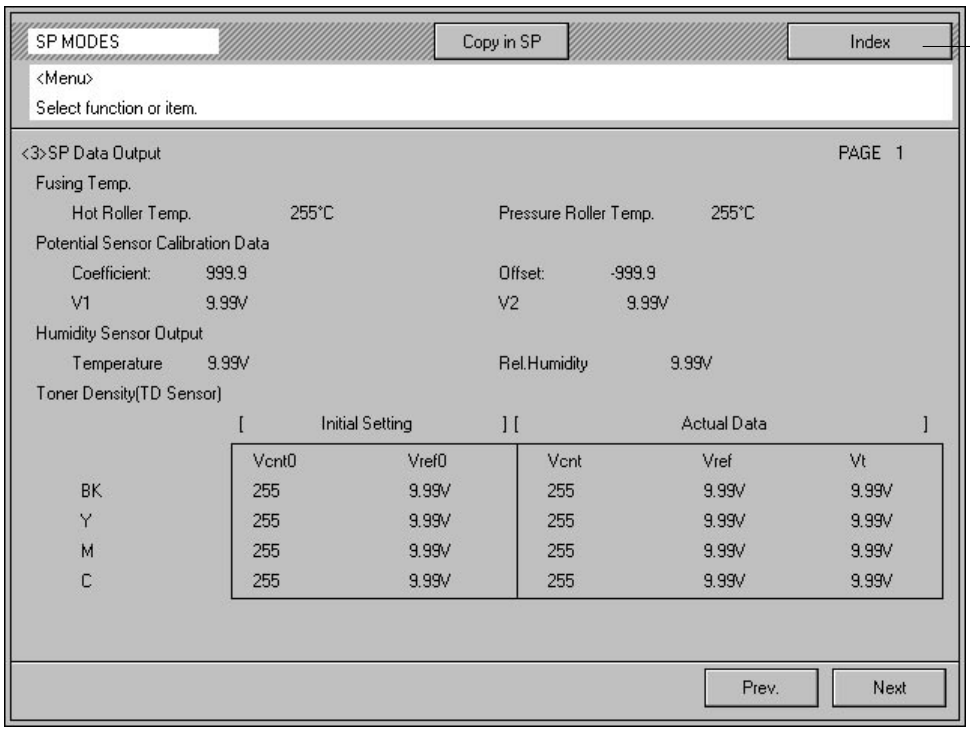

18. Check whether V_T has the same values as Vref for all colors (Bk, Y, M, C). If not, touch the Index key [B] then return to the test mode page 3 to perform the developer initial setting (step 15) again.
19. Put the toner tank [A] on the Accuride rails (2 screws).
20. Close the front doors and install the copy tray.
21. Place a C-4 test chart on the exposure glass.
22. Touch the Copy In SP key [C] and make 20 full color copies using A3 or 11" x 17" size paper. (40 full color copies using A4 or 11" x 8 1/2" is also acceptable.)

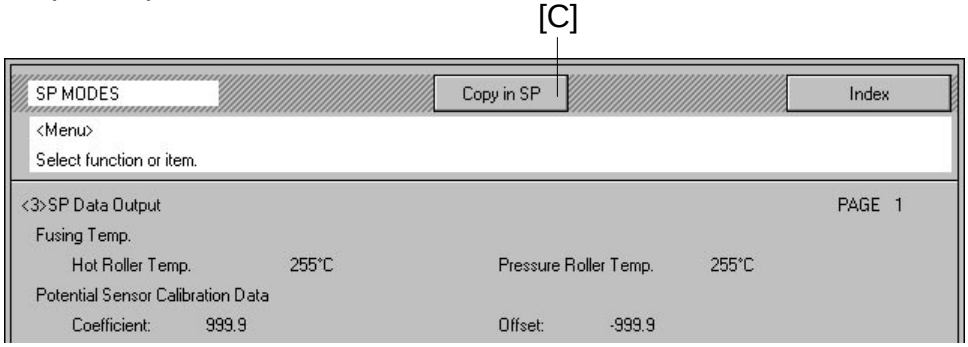

23. **Wait 5 minutes** to ensure that no residual voltage remains on the drum.

    NOTE: The process control self check (step 28) must be performed when there is no residual voltage on the drum.

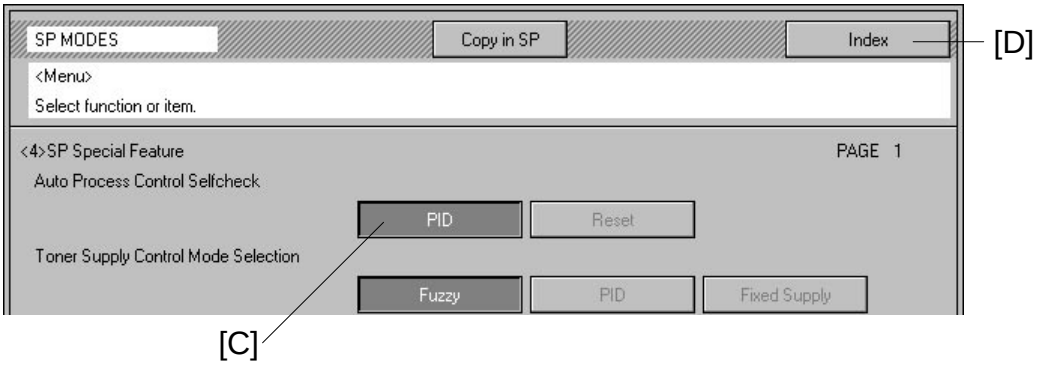

24. Open SP Special Feature P-1.

25. Confirm that the PID key [C] is selected for the Process Control Mode Selection. If not, touch the PID key [C].

26. Touch the Index key [D].

27. Open SP Test Mode P-4 (Process Control Self Check).

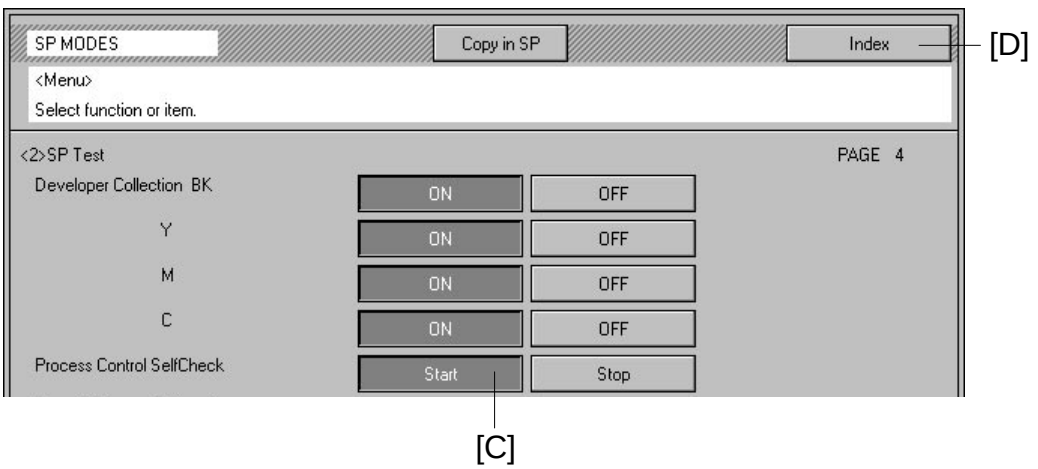

28. Touch the Process Control Self Check Start key [C]. After the self check is completed, the machine stops automatically.

⚠ CAUTION

While process control is taking place, do not touch the knob, drum stay, or drum shaft. These parts and the fly wheel carry a high voltage during process control.

29. Touch the Index key [D].

30. Open SP Data Output P-3 (Drum Potential Control Output).

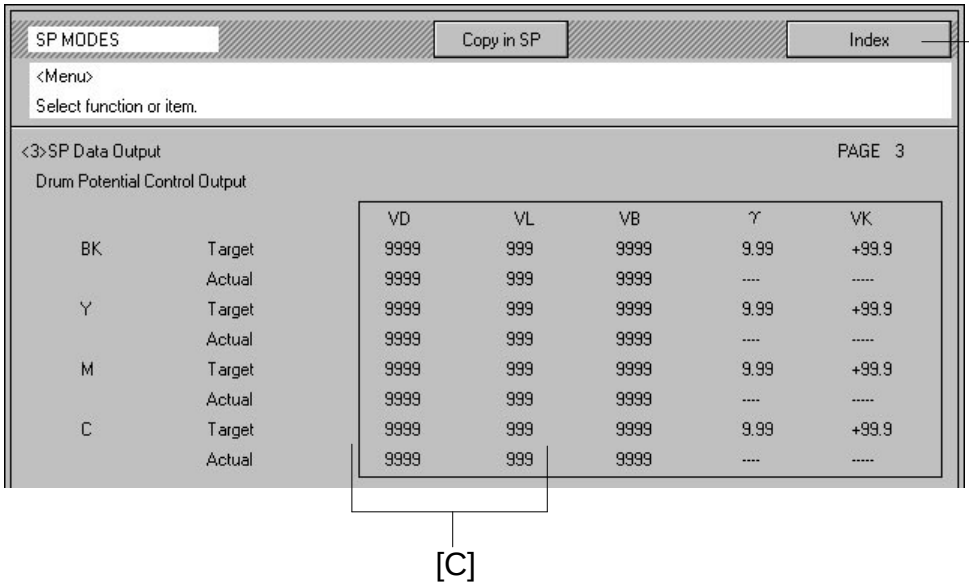

31. Check V_D and V_L [C] for each color. If the difference between 'Target' and 'Actual' for any color exceeds 5, wait 5 minutes and go back to step 28 and perform the process control self check again.

32. Touch the Index key [D].

33. Touch the Exit key [A].

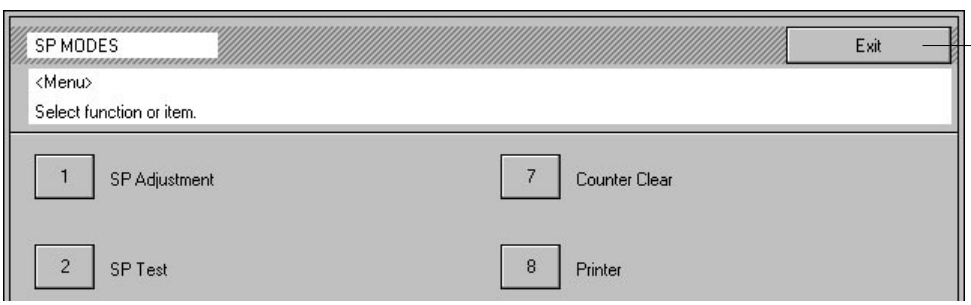

34. Turn off the main switch and place the accessory switch actuator in its original position.

35. Reinstall all parts.

36. Check the copy image and adjust the color blance if necessary.

5. TRANSFER BELT CLEANING UNIT

5.1 BELT LUBRICANT BAR REPLACEMENT

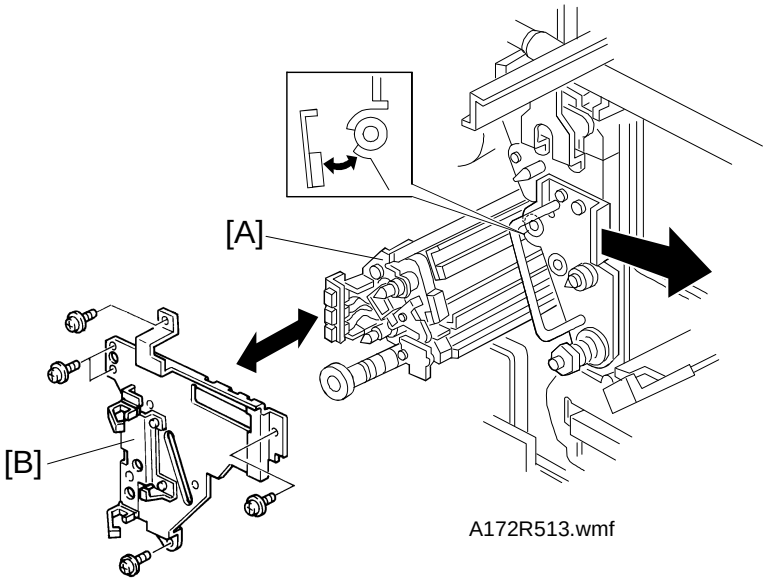

A172R513.wmf

A172R514.img

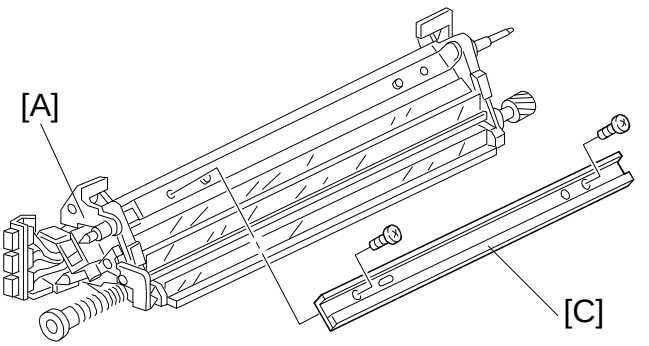

A172R515.wmf

1. Remove the following parts and slide out the transfer belt cleaning unit [A]. (Refer to Section 3, Installation.)
   - Toner tank
   - Right inner cover
   - Yellow toner supply receptacle
   - Transfer belt stay [B].
2. Remove the belt lubricant bar [C] (2 screws).

   NOTE: To prevent the belt lubricant bar [C] from being scratched, pull the handle of the transfer belt unit slightly to the right while you pull the transfer belt cleaning unit in.

5.2 BELT LUBRICANT BAR SOLENOID REPLACEMENT

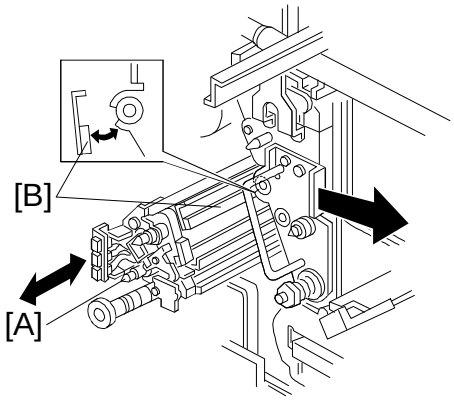

A172R513.wmf

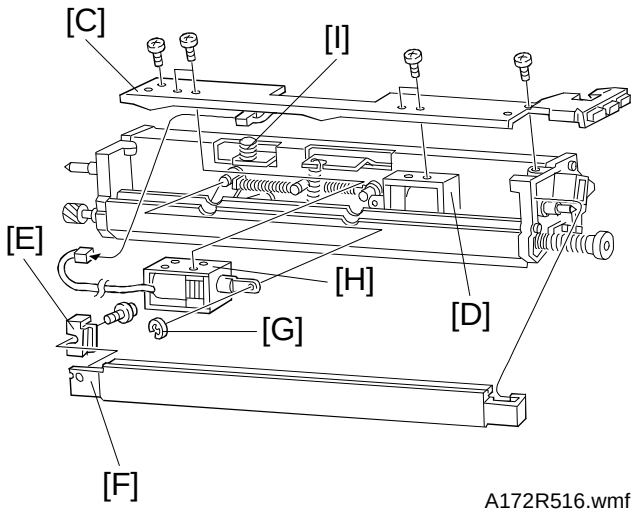

A172R516.wmf

1. Remove the cleaning unit [A] and remove the lubricant bar [B]. (Refer to the Transfer Belt Lubricant Bar Replacement section.)

   NOTE: To prevent the belt lubricant bar [B] from being scratched, pull the handle of the transfer belt unit slightly to the right while you pull the transfer belt cleaning unit out.

2. Remove the blade solenoid bracket [C] (2 screws).
3. Remove the blade solenoid [D] (2 screws).
4. Remove the base plate securing bracket [E] (1 screw) and remove the base plate [F].
5. Disconnect the lubricant bar solenoid connector.
6. Remove the lubricant bar solenoid plunger E-ring [G].
7. Remove the lubricant bar solenoid [H] (2 screws).

   NOTE: When reinstalling, make sure of the following:

   - Set the arm hole of the solenoid plunger on the pin first, then screw down the solenoid bracket.
   - The belt lubricant bar solenoid's plunger must be in (the position for no contact with the transfer belt).
   - The spring [I] must fit the projection on the blade solenoid bracket.

6. TRANSFER ROLLER UNIT

6.1 ROLLER LUBRICANT BAR REPLACEMENT

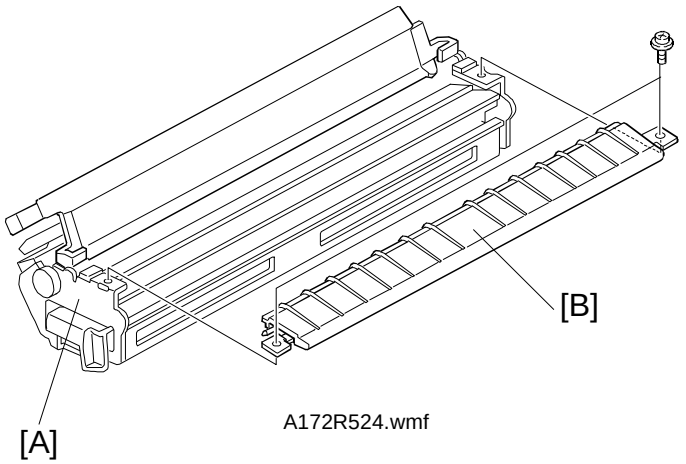

A172R524.wmf

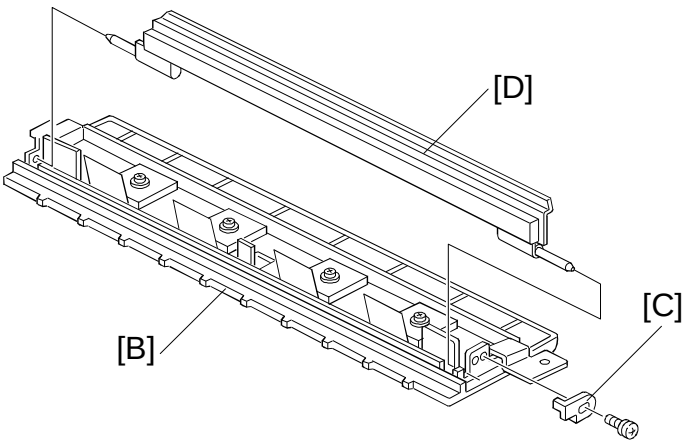

A172R525.wmf

1. Remove the transfer roller unit [A]. (See A109 Transfer Roller Unit Removal).
2. Remove the transfer roller guide [B] (2 screws).
3. Remove the hook [C] (1 screw) and replace the roller lubricant bar [D].

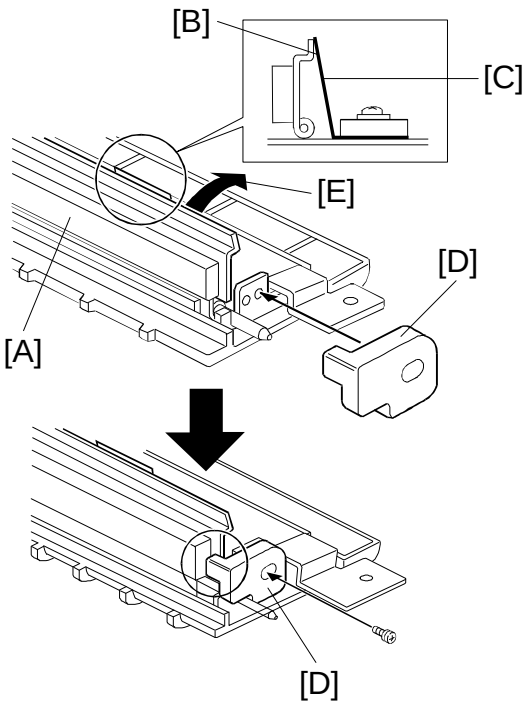

A172R526.wmf

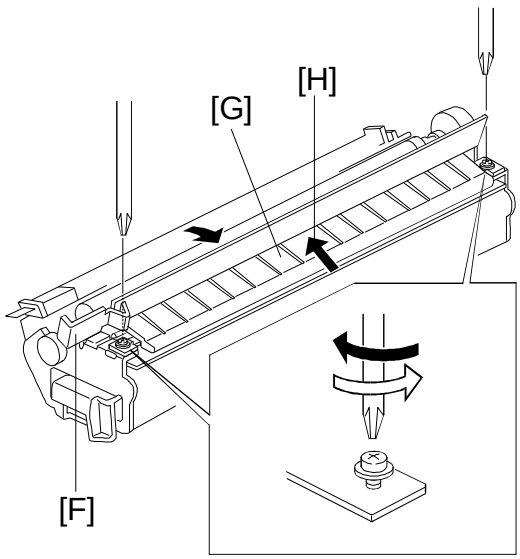

A172R527.wmf

NOTE: When installing, do the following.

- Handle the lubricant bar [A] gently. They break or crack easily.
- When resting the lubricant bar bracket [B] on the unit, make sure that the spring plate [C] is positioned as shown. (The spring plate should not be under the lubricant bar bracket.)
- To install the hook [D], press the lubricant bar bracket in the direction [E] as shown above.
- When reinstalling the lower guide [G], flip the upper guide [F] to the normal position. Do not push it in the direction indicated by the arrow [H]. Let the guide lie naturally in its position, then tighten the 2 screws.

7. FUSING UNIT

7.1 PRESSURE ROLLER CLEANING ROLLER REPLACEMENT

⚠ CAUTION

1. Be careful when handling the fusing unit. It is hot.

2. Take care not to spill silicone oil on the floor. If silicone oil spills on the floor, immediately clean it with a silicone oil remover. Silicone oil is very slippery and can cause someone to fall.

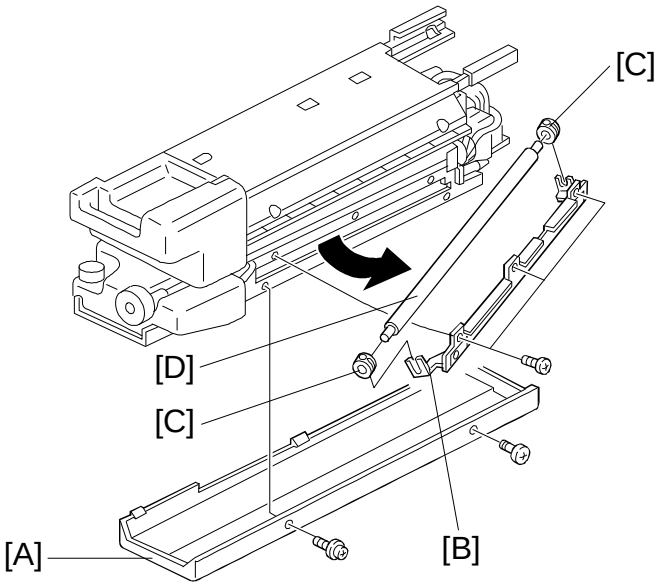

A172R517.wmf

1. Remove the fusing unit from the machine. (See A109 Fusing Unit Removal.)
2. Remove the fusing lower cover [A] (2 screws).
3. Remove the cleaning roller support bracket [B] (3 screws).
4. Remove the bearings [C] and remove the pressure roller cleaning roller [D].

7.2 FUSING PRESSURE (NIP BAND WIDTH) CONFIRMATION

NOTE: Normally this adjustment is not needed in the field. (The standard factory settings are shown in the table below.)
Perform the following procedures only when the problem is thought to be caused by an incorrect nip band width.

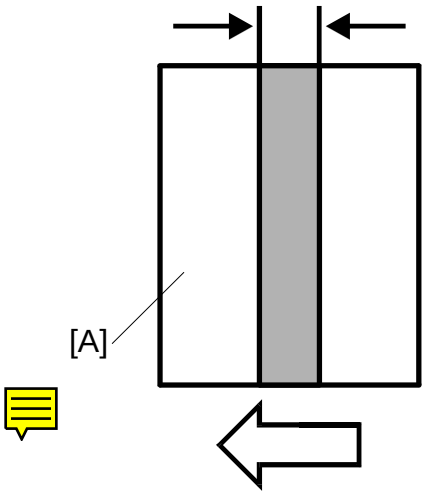

A172R518.wmf

LOCATION	STANDARD
Center	9.0 ± 0.5 mm (Confirmation reference)
Both Edges	9.5 ± 0.5 mm

1. After warming up, turn off the main switch and pull out the fusing unit.
2. Pass an OHP sheet sideways [A] through the rollers to about the center position.
3. Wait 30 seconds, then remove the OHP sheet.
4. Measure the width of the the center area and both edges of the nip band.
5. If out of standard, adjust the pressure by using the spring screws located at both edges of the fusing unit. (Turning the screws clockwise will increase the nip band width.)

   Confirm that the nip band width is within specification.

8. OTHERS

8.1 OPTICS COOLING FAN FILTER REPLACEMENT

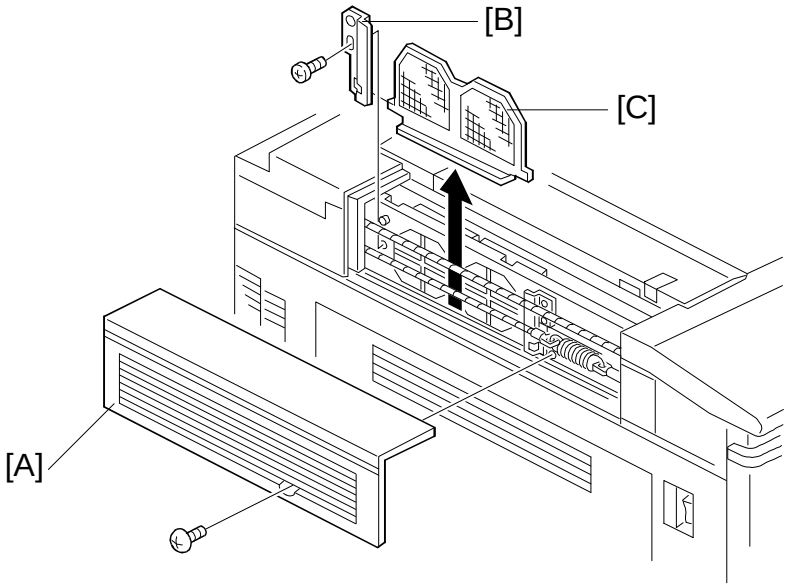

A172R519.wmf

1. Remove the top left cover [A] (1 screw).
2. Remove the filter securing bracket [B] (1 screw).
3. Remove the optics cooling fan filter [C].

8.2 OPERATION PANEL CONTROL BOARD REPLACEMENT

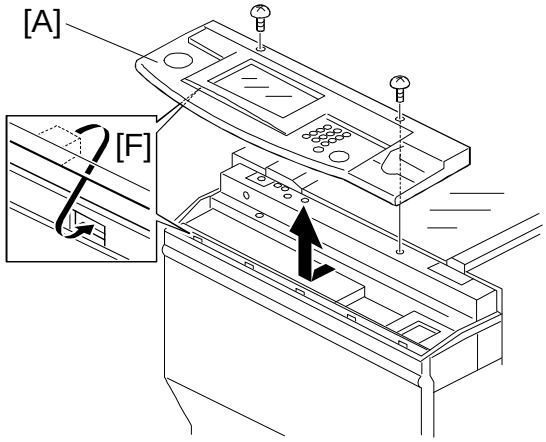

A172R520.wmf

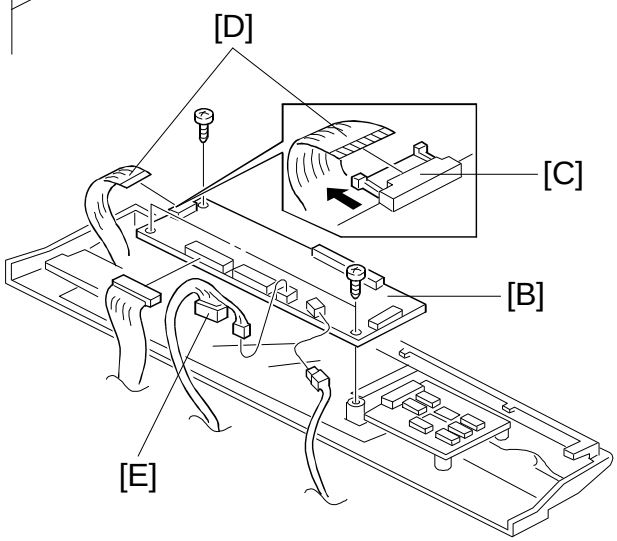

A172R521.wmf

1. Remove the operation panel [A] (2 screws).
2. Disconnect the operation panel control board [B] connectors. (A172: 5 connectors, A199: 4 connectors).

   NOTE:
   - Pull out the connector catch [C] first, when disconnecting the flexible connector [D].
     Also when reinstalling, slide in the flexible connector when the connector catch is pulled out.
   - The connector [E] is for A172 only.

3. Remove the operation panel control board [B] (2 screws).

   NOTE: When reinstalling the operation panel, make sure that the panel is properly hooked in [F].

8.3 POINT ACCURACY ADJUSTMENT

When the touch panel sensing mechanism is not working properly, adjust it as follows:

1. Press the Interrupt key.
2. Hold down the Clear/Stop key for more than 3 seconds.

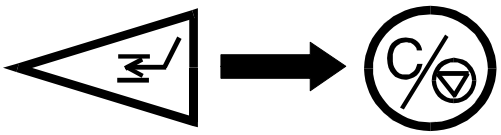

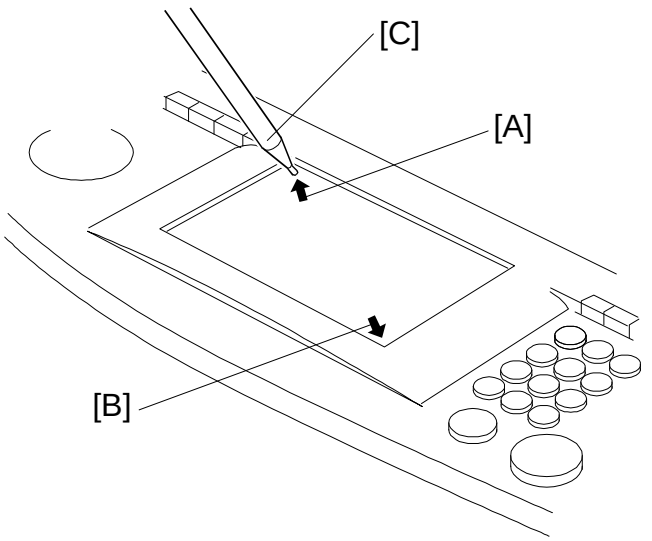

A172R522.wmf

3. The graphic sensing adjustment screen will appear. Touch the upper left corner [A] then the lower right corner [B] of the panel using the editor pen [C].
4. Touch a few spots on the LCD touch panel, and confirm that the marker on the screen appears at exactly the same location as the pointed tip. If it does not, press the Clear/Stop key and repeat this procedure.
5. Press the Enter key to save the setting.
6. Press the Interrupt key to cancel the interrupt mode.

9. A172/A199 Fiery XJ System Printer γ Adjustment Procedure

9.1 Procedure

After you install the Interface Kit Type-C in the A172/A199 copiers, perform the following printer γ adjustment procedure.

NOTE: 1 The printer gamma must be adjusted for both Fiery print mode settings (contone and halftone).

NOTE: 2 The ACC procedure automatically adjusts both printer gamma settings (contone and halftone) at once. These printers modes can not be adjusted independently using ACC.

1. Connect the copier to the Fiery XJ with the cable provided.
2. Turn on the copier. When the copier is in standing by mode, turn on the Fiery XJ.

NOTE: Make sure that the copier is not in use and that the Fiery XJ screen displays "idle".

3. Print a Test Page to check the color balance and image density.
   1) At the idle screen, press the menu button of the Fiery XJ LCD once.
   2) Press the line selection button (to the right of "Print XJ Pages").
   3) Select Test Page from the submenu to print the Test Page (default: contone).
4. Compare the color scales on the Test Page just printed with the color scales on the reference Fiery XJ Test Page.
   Check that the various grades along the color scales are similar in density to those on the reference Test Page.
5. If the color scales on the Test Page are not acceptable, perform the Auto Color Calibration (ACC: Steps from 6 to 14).

6. Press the **User Tool** key on the operation panel.
7. Select **No. 2: Sensitivity Adjustment**.

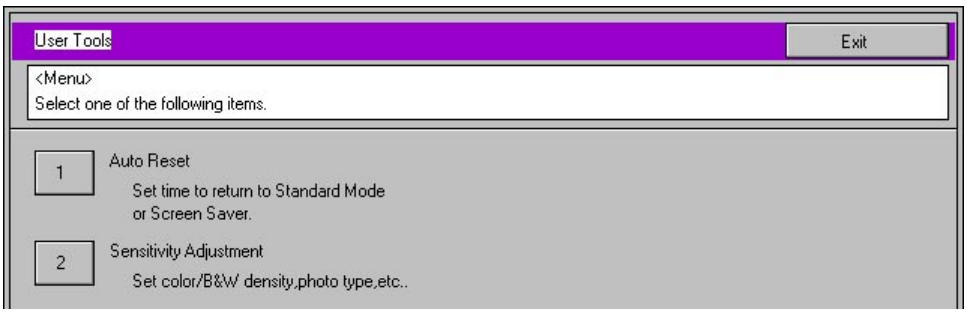

8. Press the **Yes** key [A]. If you want to recall the previous settings, press the **Prev. Setting** key [B].

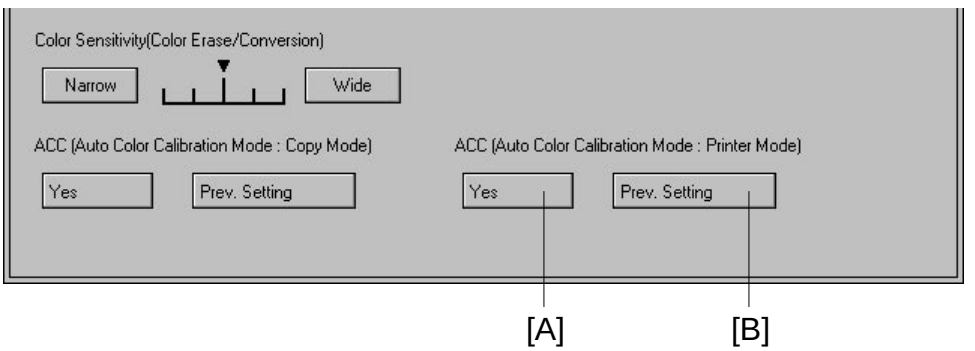

9. Press the **Print Start** key [C].
   A test pattern will be printed.
   It will be printed on A4 or 8 1/2" x 11" sideways. If these sizes are not available, it will be printed on a larger size.

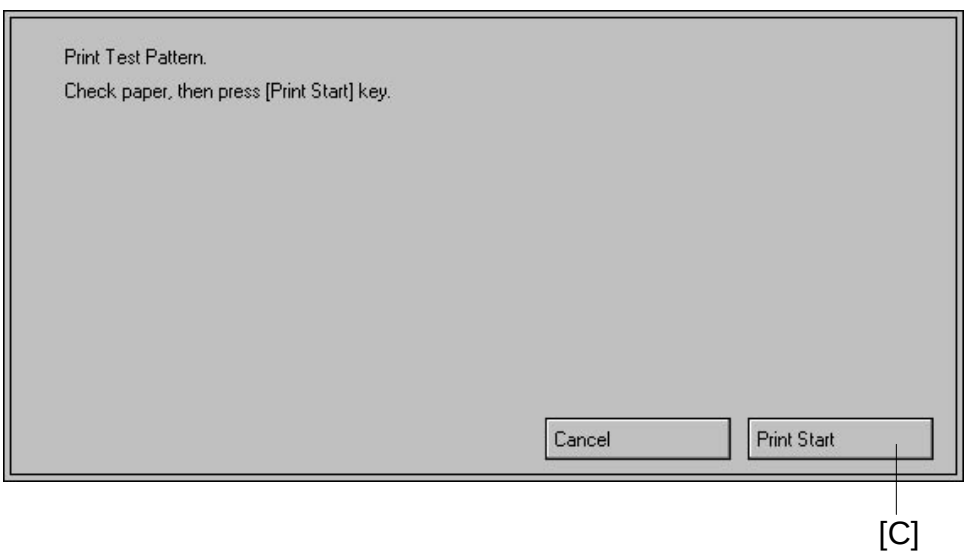

10. Place the test pattern on the exposure glass as shown in the illustration. If the copier is equipped with an optional dual job feeder, put the test pattern face-up on top of several sheets of white paper of the same size. Then place all the sheets face-down on the exposure glass.

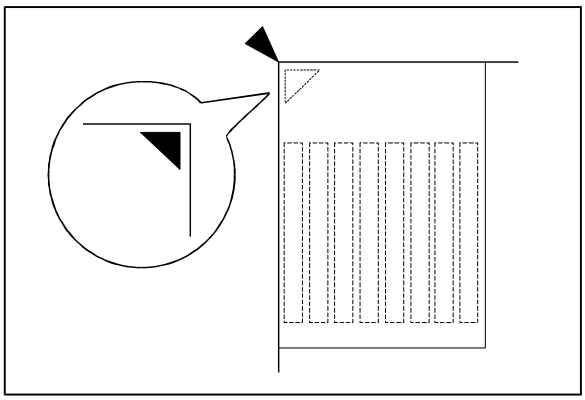

A172R523.wmf

11. Press the **Scan Start** [D] key.
The γ correction data will be automatically adjusted.

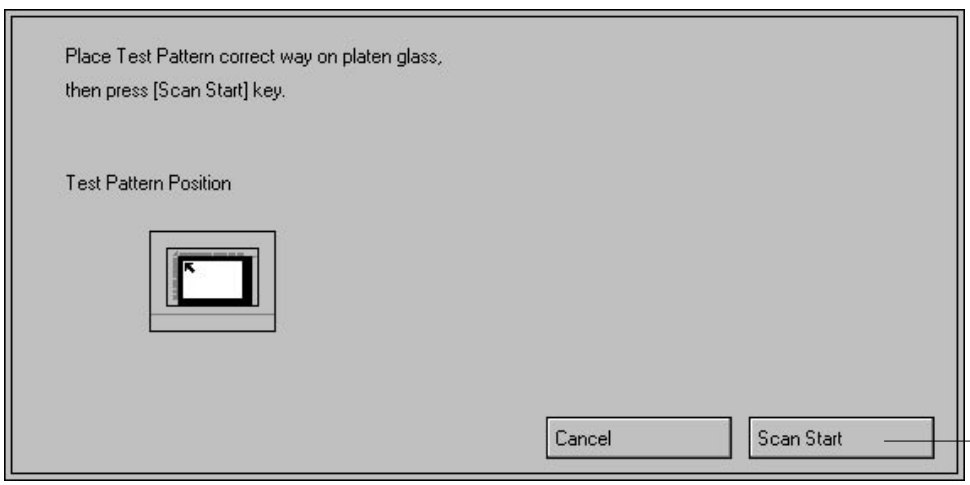

12. Print out the test page.

13. Compare the printouts made before the ACC (Auto Color Calibration) and after the ACC.

14. If you want to recall the previous settings, perform steps 6 ~ 8 and in step 3 press the **Prev. Setting** key [B] instead of the **Yes** key.

15. If the output quality is still not satisfactory, change the value of the γ correction data for each mode as follows (contone/halftone).

9.2 To change the value of the γ correction data.

1. Enter the SP mode and touch **No.8 SP Printer.**
2. On page 1 (Halftone mode) or page 2 (Contone mode), change the OFFSET values as follows.

9.2.1 For Letter Mode

In the "**=Halftone=**" screen (page 1) of the SP mode, adjust the 11th levels for the colors that need adjusting by changing only the **ID MAX** setting in the **OFFSET** column.

NOTE: The **ID MAX OFFSET** setting should be between 0 and 4.
Do not change the data in the **STEP** columns; these must remain at the default settings.
Do not change the **H**, **M**, or **L** settings in the **OFFSET** column. Such changes will have no effect on the printout, because the various colors in the H, M, and L ranges are produced by dithering (the laser is switched on and off to produce dither patterns).

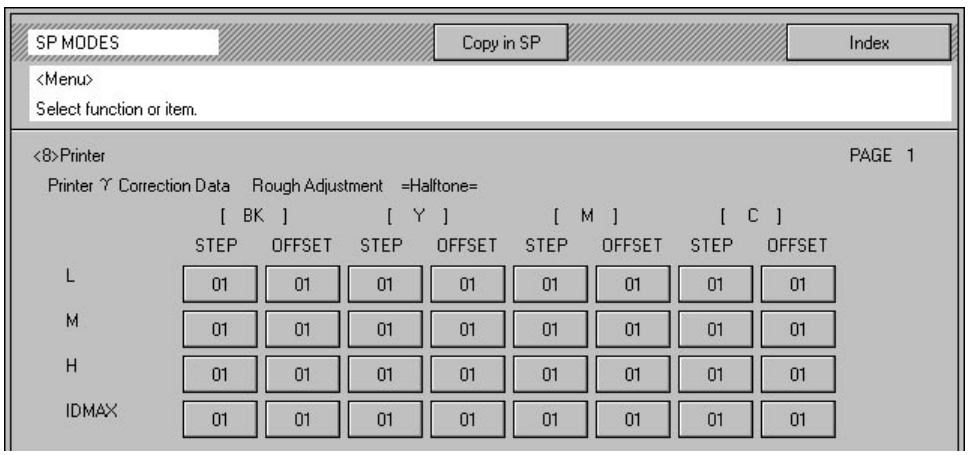

9.2.2 For Photo Mode

In the "**=Contone=**" screen (page 2), adjust the color scales by changing the γ data in the **OFFSET** columns for each color.

Low: Use to adjust levels 1 to 2 of the 11-step color scale in the middle of the Test Page.

Middle: Use to adjust levels 2 to 10.

High: Use to adjust levels 10 to 11.

ID MAX: Use to adjust the whole range, including level 11.
Do not change this unless the whole range needs to be made brighter or darker. The adjustment is very sensitive, so it is best not to change the default settings.

Do not change the γ data in the STEP column from the default settings.

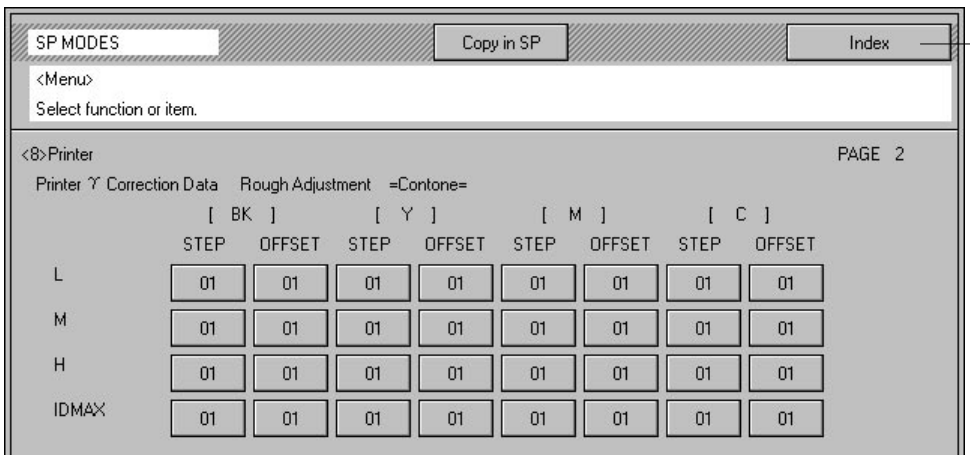

3. To finish the operation, touch the **Index** [A] key to return to the SP mode menu. Touch the **Exit** key to exit the SP mode.

To save the current data as a back-up

→ Press the **Save in Temporary Memory** key [A].

To recall the data from the Temporary Memory, or to undo the last ACC

→ Press the **Recall form Temporary Memory** key [B].

NOTE: When the ACC is performed, the current printer gamma setting will be stored automatically in the Temporary Memory.

To recall the default data

→ Press the **Recall the Default Data** key [C].

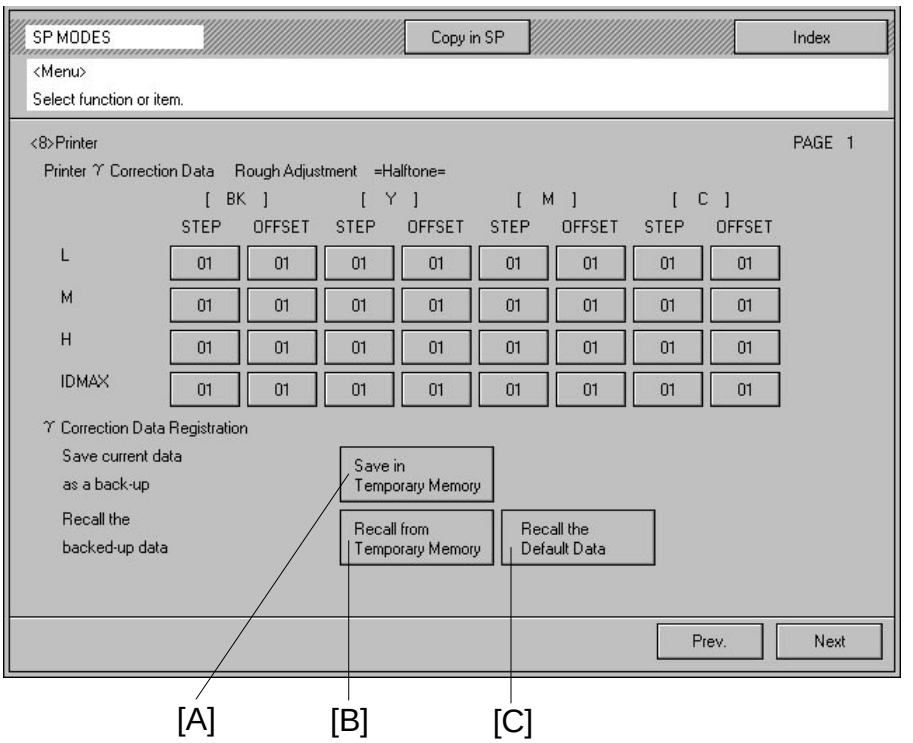

SECTION 6

TROUBLESHOOTING

1. SERVICE CALL CONDITIONS

1.1 SUMMARY

There are 4 levels of service call conditions.

Level	Definition	Display
A	The SC can only be reset by a service representative (see the notes on the next page) to prevent the machine from being damaged. The copier cannot be operated at all.	The SC display will not be canceled. 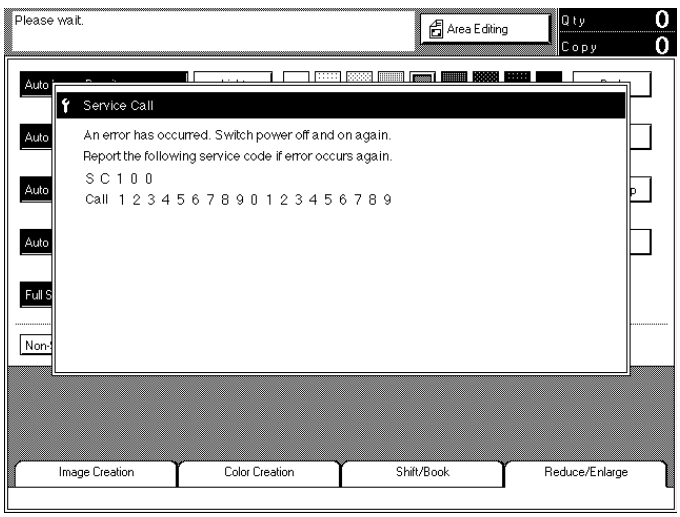
B	The SC can be reset by turning main switch off and on if the SC is caused by a misdetection.	
C	The copier can be operated as usual except for the unit related to the service call.	If the related function is selected, this display appears. 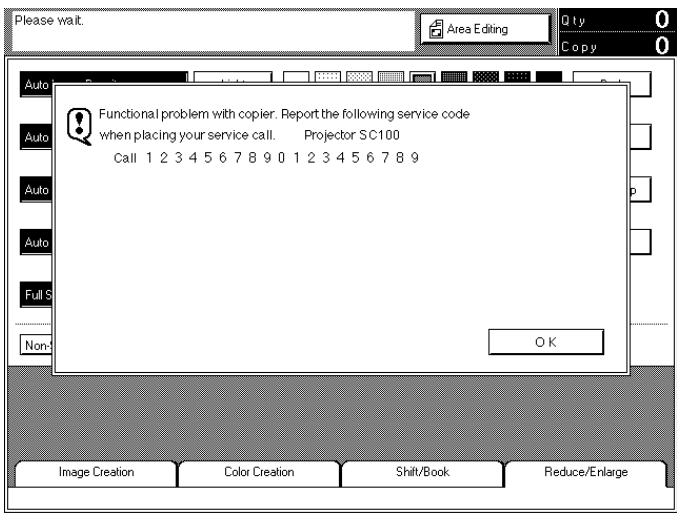
D	Only the SC counter is incremented. The copier can be operated as usual.	The SC will not be displayed.

Trouble-shooting

NOTE: 1) If the problem is related to electrical circuit boards, first disconnect then reconnect the connectors before replacing the PCBs.

2) If the problem is related to motor lock, first check the mechanical load before replacing motors or sensors.

3) To reset a Level A SC, enter SP mode then turn the main switch off and on.

4) When a Level A or B SC condition occurs while in SP mode, the display does not indicate the SC number. You can recognize that there is an SC condition because no key input is possible. If this occurs, check the SC number by turning the main switch off and on and make some test copies.

1.2 SCANNING

SC107: Lamp regulator malfunction

- Definition - [B]

The machine detects lamp regulator malfunctions by monitoring the signal for both the exposure lamp on and off conditions.

- Possible causes -

- Lamp regulator defective
- Exposure lamp open
- Optics thermoswitch open
- Scanner control board defective or poor connection

SC120: Scanner HP sensor abnormal - Stays off

- Definition - [B]

The scanner home position sensor does not detect the on condition during scanner initialization.

- Possible causes -

- Scanner HP sensor defective
- Scanner motor defective or poor connection
- Scanner drive board defective or poor connection
- Scanner control board defective or poor connection
- Loose Allen screw on scanner drive pulleys
- DC power supply board defective (FU802)

SC121: Scanner HP sensor abnormal - Stays on

- Definition - [B]

The scanner home position sensor does not detect the off condition during scanner initialization.

- Possible causes -

- Scanner HP sensor defective
- Scanner motor defective or poor connection
- Scanner drive board defective or poor connection
- Scanner control board defective or poor connection
- Loose Allen screw on scanner drive pulleys
- DC power supply board defective (FU802)

SC130: Scanner start abnormal

- Definition - [B]
  The scanner start signal is detected before the scanner returns to the home position.

- Possible causes -
  - Scanner control board defective

SC170: Scanner DA1 abnormal

- Definition - [B]
  When performing the AGC, DA1 is not in the proper range.

- Possible causes -
  - Poor connection between CCD board and scanner control board
  - Scanner control board defective
  - CCD board defective

SC171: Scanner DA2 abnormal

- Definition - [B]
  When performing the AGC, DA2 is not in the proper range.

- Possible causes -
  - Poor connection between CCD board scanner control board
  - Scanner control board defective
  - CCD board defective

SC172: Scanner DA3 abnormal

- Definition - [B]
  When performing the AGC, DA3 is not in the proper range.

- Possible causes -
  - Dirty white plate, reflectors, mirrors, or lens
  - White plate on the exposure glass not properly positioned
  - Exposure lamp deteriorated
  - Scanner or mirrors not properly positioned
  - Scanner control board defective
  - CCD board defective

SC173: Lamp regulator adjustment error

- Definition - [B]

When performing the AGC with the lamp voltage at 72 V, the CCD output does not exceed 1 V.

- Possible causes -

If the exposure lamp lights during AGC

- White plate on the exposure glass not properly positioned
- Dirty white plate, reflectors, mirrors, or lens
- Poor connection between lamp regulator and scanner drive board (CN105) or between scanner control board and scanner drive board (CN101)
- Exposure lamp deteriorated
- CCD board defective
- Scanner or mirrors not properly positioned
- Lamp regulator defective or poor connection (CN3)
- Scanner control board defective or poor connection (CN106)

If the exposure lamp does not light during AGC

- Poor connection between lamp regulator and scanner drive board (CN105) or between scanner control board and scanner drive board (CN101)
- No ac input to lamp regulator (CN1) $\rightarrow$ AC drive board or main power relay defective
- Lamp regulator defective or poor connection (CN3)
- Scanner control board defective or poor connection (CN106)

SC174: Scanner DA2* abnormal

- Definition - [B]

When performing the AGC, DA2* is not in the proper range.

- Possible causes -

- Poor connection between CCD board and scanner control board
- Scanner control board defective
- CCD board defective

SC191: Bar code scanning error

- Definition - [B]
  The bar code for the machine identification number cannot be detected when the AGC is performed after the main switch is turned on.

- Possible causes -
  - The bar code label is dirty.
  - Scanner mirrors are not in position

SC192: Bar code number is different

- Definition - [B]
  The bar code number is not identical to the machine identification number stored in memory.

- Possible causes -
  - Wrong machine identification number in memory
  - Machine identification number is not entered in the new (replaced) RAM board
  - RAM board defective
  - Main control board defective

SC193: IDU connection error

- Definition - [B]
  IDU connection cannot be detected.

- Possible Causes -
  - IDU is disconnected
  - IDU defective

SC194: IDU detection error

- Definition - [B]
  IDU detection error

- Possible Causes -
  - IDU defective

1.3 PRINTING

SC302: See AROUND THE DRUM

SC303: See AROUND THE DRUM

SC320: Polygon motor lock

- Definition - [B]
  The polygon motor lock signal is detected for more than 3 seconds.

- Possible causes -
  - Polygon motor defective
  - Polygon motor drive board defective
  - Scanner control board defective

SC321: Transfer belt start signal error

- Definition - [B]
  The transfer belt start signal is not detected within 500 ms relative to the programmed timing.

- Possible causes -
  - IPU board defective
  - DIP SW301-1 on the IPU board is not ON

SC322: Laser synchronizing signal error

- Definition - [B]
  The intervals between laser synchronizing signals become over 1.2 times the normal interval.

- Possible causes -
  - Laser synchronizing detector board defective
  - Scanner control board defective
  - Laser synchronizing detector board not properly positioned
  - LD unit defective

SC323: LD drive current over

- Definition - [B]
  The LD drive board applies more than 100 mA to the LD for over 2.3 ms.

- Possible causes -
  - LD unit defective

1.4 DEVELOPMENT

SC341: Bk-development motor lock

- Definition - [B]

The Bk-development motor lock signal is detected for more than 3 seconds.

- Possible causes -

- Bk-development motor defective or poor connection
- Too much load on the Bk-development section
- Interface board 1 defective or poor connection (CN708)
- Main control board defective

SC342: Bk-sleeve motor lock

- Definition - [B]

The Bk-sleeve motor lock signal is detected for more than 3 seconds.

- Possible causes -

- Bk-sleeve motor defective or poor connection
- Too much load on the Bk-sleeve roller
- Interface board 1 defective or poor connection (CN708)
- Main control board defective

SC343: Y-sleeve motor lock

- Definition - [B]

The Y-sleeve motor lock signal is detected for more than 3 seconds.

- Possible causes -

- Y-sleeve motor defective or poor connection
- Too much load on the Y-sleeve roller
- Interface board 2 defective or poor connection (CN806)
- Main control board defective

SC344: M-sleeve motor lock

- Definition - [B]
  The M-sleeve motor lock signal is detected for more than 3 seconds.

- Possible causes -
  - M-sleeve motor defective or poor connection
  - Too much load on the M-sleeve roller
  - Interface board 2 defective or poor connection (CN806)
  - Main control board defective

SC345: C-sleeve motor lock

- Definition - [B]
  The C-sleeve motor lock signal is detected for more than 3 seconds.

- Possible causes -
  - C-sleeve motor defective or poor connection
  - Too much load on the C-sleeve roller
  - Interface board 2 defective or poor connection (CN806)
  - Main control board defective

SC346: Color-development motor lock

- Definition - [B]
  The Color-development motor lock signal is detected for more than 3 seconds.

- Possible causes -
  - Color-development motor defective or poor connection
  - Too much load on one of the C/M/Y-development sections
  - Interface board 1 defective or poor connection (CN708)
  - Main control board defective

SC350: Bk-TD sensor initial setting error

SC351: Y-TD sensor initial setting error

SC352: M-TD sensor initial setting error

SC353: C-TD sensor initial setting error

- Definition - [B]
  TD sensor output (Vt) does not reach a value between 2.4 and 2.6 V when performing the toner density initial setting.

- Possible causes -
  - TD sensor defective
  - Main control board defective
  - Developer not distributed evenly

SC354: Bk-TD sensor gain adjustment error

SC355: Y-TD sensor gain adjustment error

SC356: M-TD sensor gain adjustment error

SC357: C-TD sensor gain adjustment error

- Definition - [B]
  When adjusting TD sensor gain during the toner density initial setting, Vcnt (output voltage) does not reach a value between 7 and 11 V.

- Possible causes -
  - Main control board defective

SC360: Development bias leak

- Definition - [B]
  The development bias leak signal is detected for more than 3 seconds.

- Possible causes -
  - Sleeve roller receptacle damaged
  - High voltage supply board - B defective

SC370: Bk-TD sensor upper detection abnormal

SC371: Y-TD sensor upper detection abnormal

SC372: M-TD sensor upper detection abnormal

SC373: C-TD sensor upper detection abnormal

- Definition - [B]
  TD sensor output (Vt) exceeds 4.5 V during copy cycles.

- Possible causes -
  - TD sensor defective
  - Main control board defective
  - Too much toner in the development unit (accidental)

SC374: Bk-TD sensor lower detection abnormal

SC375: Y-TD sensor lower detection abnormal

SC376: M-TD sensor lower detection abnormal

SC377: C-TD sensor lower detection abnormal

- Definition - [B]
  TD sensor output (Vt) becomes lower than 0.5 V during copy cycles.

- Possible causes -
  - TD sensor defective
  - Main control board defective
  - Toner supply system defective

1.5 AROUND THE DRUM

SC302: Charge current leak

- Definition - [B]
  A charge current leak signal is detected for more than 3 seconds.

- Possible causes -
  - Charge corona end block damaged
  - Charge corona receptacle damaged
  - High voltage supply board - C/G defective

SC303: Wire cleaner motor error

- Definition - [B]
  Over current signal is detected for more than 10 seconds, when the wire cleaner motor rotates.

- Possible causes -
  - Wire cleaner motor defective
  - Wire cleaner drive board defective
  - Wire cleaner pad unit not properly positioned

SC380: Drum potential sensor calibration error

- Definition - [D]
  When performing the process control self-check, the drum potential sensor is not calibrated properly. The previous settings are used in this case. If there are no previous settings, the defaults are used.

- Possible causes -
  - Drum potential sensor defective
  - Interface board 1 defective
  - Main control board defective
  - High voltage supply board - B defective

SC381: Charge potential abnormal

- Definition - [D]
  When performing the process control self-check, the charge potential of the drum is not in the proper range.

- Possible causes -
  - High voltage supply board- C/G defective
  - Main control board defective

SC382: V_D adjustment error

- Definition - [D]

When doing the process control self-check, V_D does not come within 5 V of the target after 30 trials. The previous settings for V_G, V_B, and I_{LD} are used in this case. If there are no previous settings, the defaults are used.

- Possible causes -

- High voltage supply board - C/G defective
- Main control board defective

SC383: V_L adjustment error

- Definition - [D]

When performing the process control self-check, V_L does not come within 5 V of the target after 30 trials. The previous settings for V_G, V_B, and I_{LD} are used in this case. If there are no previous settings, the defaults are used.

- Possible causes -

- LD drive board defective
- IPU board defective

SC384: LD exposure abnormal

- Definition - [D]

When performing the process control self-check, the potentials on the 14-step gradation pattern do not come within the target range.

- Possible causes -

- LD drive board defective
- IPU board defective

SC390: ID sensor adjustment error

- Definition - [D]

When performing the process control self-check, Vsg adjustment does not result in 4.0 ± 0.2 V.

- Possible causes -

- ID sensor defective
- Main control board defective
- ID sensor too dirty

SC422: PCC leak

- Definition - [B]
  A PCC leak signal is detected for more than 3 seconds.

- Possible causes -
  - PCC end block damaged
  - High voltage supply board - T1/PCC/BR defective

SC440: Drum motor lock

- Definition - [B]
  The drum motor lock signal is detected for more than 3 seconds.

- Possible causes -
  - Too much load on the drum drive mechanism
  - Drum motor defective or poor connection
  - Interface board 1 defective or poor connection (CN708)
  - Main control board defective

1.6 TRANSFER BELT / ROLLER

SC405: Transfer belt position abnormal

- Definition - [B]

The transfer belt is positioned to touch the drum in the following conditions:
Belt and drum cleaning completed after the main switch is turned on
Belt and drum cleaning completed after a paper jam is removed
Copy job completed

- Possible causes -

- Transfer belt position sensor defective
- Transfer belt position clutch defective
- Interface board 1 defective
- Main control board defective

SC406: Transfer roller position abnormal

- Definition - [B]

The transfer roller is positioned to touch the transfer belt in the following conditions:
Belt and drum cleaning completed after the main switch is turned on
Belt and drum cleaning completed after a paper jam is removed
Copy job completed

- Possible causes -

- Transfer roller position sensor defective
- Transfer roller position clutch defective
- Interface board 2 defective
- Main control board defective

SC411: Paper discharge leak

- Definition - [B]

A paper discharge leak signal is detected for more than 3 seconds.

- Possible causes -

- Paper discharge plate is touching a conductive foreign object
- High voltage supply board - D defective

SC420: Cleaning motor lock

- Definition - [B]
  The cleaning motor lock signal is detected for more than 3 seconds.

- Possible causes -
  - Cleaning motor defective or poor connection
  - Interface board 1 defective or poor connection (CN710)
  - Main control board defective

SC422: See AROUND THE DRUM

SC440: See AROUND THE DRUM

1.7 PAPER FEED

SC500: Transport motor lock

- Definition - [B]
  The transport motor lock signal is detected for more than 3 seconds.

- Possible causes -
  - Too much load on the transport unit, fusing unit, transfer roller unit, or transfer belt cleaning unit
  - Transport motor defective or poor connection
  - Interface board 2 defective or poor connection (CN806)
  - Main control board defective

SC502: 1st tray lift motor abnormal

SC503: 2nd tray lift motor abnormal

SC504: 3rd tray lift motor abnormal

- Definition - [C]
  The lift sensor is not activated within 10 seconds after the lift motor starts turning. The SC message for level C is displayed when this condition is detected twice.

- Possible causes -
  - Lift sensor defective
  - Tray lift motor defective or poor connection
  - Paper feed interface board defective or poor connection (CN906)
  - Main control board defective

SC510: Paper feed motor abnormal

- Definition - [B]
  The paper feed motor lock signal is detected for more than 3 seconds.

- Possible causes -
  - Too much load on the paper feed mechanism
  - Paper feed motor defective or poor connection
  - Paper feed interface board defective or poor connection (CN910)
  - Main control board defective

1.8 FUSING

SC541: Fusing (hot roller) thermistor open

- Definition - [A]
  The output of the fusing (hot roller) thermistor goes to 5 V, corresponding to 0°C.

- Possible causes -
  - Fusing (hot roller) thermistor open
  - Fusing unit not installed
  - Main control board defective

SC542: Fusing (hot roller) warm-up error

- Definition - [A]
  The fusing (hot roller) temperature does not reach the ready temperature within 12 minutes after the main switch is turned on.

- Possible causes -
  - Fusing (hot roller) thermistor not in position
  - Fusing (hot roller) lamp open
  - Fusing (hot roller) thermistor defective
  - Main control board defective

SC543: Fusing (hot roller) overheat

- Definition - [A]
  A fusing (hot roller) temperature of over 200°C is detected 5 times (within 5 seconds).

- Possible causes -
  - Fusing (hot roller) thermistor defective
  - AC drive board defective (triac)
  - Main control board defective

SC544: Fusing (hot roller) low temperature abnormal

- Definition - [A]

A fusing (hot roller) temperature of below 90°C is detected 6 times (within 6 seconds) after warm-up is completed.

- Possible causes -

- Fusing (hot roller) thermistor defective
- AC drive board defective
- Main control board defective
- Fusing (hot roller) thermistor not in position
- Fusing (hot roller) lamp open

SC545: Fusing (hot roller) ready temperature abnormal

- Definition - [A]

Fusing (hot roller) temperature goes below the ready temperature (10°C below the control temperature) after warm-up is completed, and it does not reach the ready temperature within 6 minutes.

- Possible causes -

- Fusing (hot roller) thermistor defective
- AC drive board defective
- Main control board defective

SC547: Fusing (hot roller) temperature does not increase

- Definition - [A]

During warm-up, the fusing (hot roller) temperature does not increase when compared to the temperature 1 minute before.

- Possible causes -

- Fusing (hot roller) thermistor defective
- AC drive board defective
- Main control board defective

SC551: Pressure roller thermistor open

- Definition - [A]
  The output of the pressure roller thermistor goes to 5 V, corresponding to 0°C.

- Possible causes -
  - Pressure roller thermistor open
  - Main control board defective
  - Fusing unit not installed

SC552: Pressure roller warm-up error

- Definition - [A]
  Pressure roller temperature does not reach the ready temperature within 12 minutes after the main switch is turned on.

- Possible causes -
  - Pressure roller thermistor not in position
  - Pressure roller lamp open
  - Pressure roller thermistor defective
  - Main control board defective

SC553: Pressure roller overheat

- Definition - [A]
  A pressure roller temperature of over 180°C is detected 5 times.

- Possible causes -
  - Pressure roller thermistor defective
  - AC drive board defective (triac)
  - Main control board defective

SC554: Pressure roller low temperature abnormal

- Definition - [A]

A pressure roller temperature of below 70°C is detected 6 times after warm-up is completed.

- Possible causes -

- Pressure roller thermistor defective
- AC drive board defective
- Main control board defective
- Pressure roller thermistor not in position
- Pressure roller lamp open

SC555: Pressure roller ready temperature abnormal

- Definition - [A]

The pressure roller temperature goes below the ready temperature (10°C below the control temperature) after warm-up is completed, and does not reach the ready temperature within 6 minutes.

- Possible causes -

- Pressure roller thermistor defective
- AC drive board defective
- Main control board defective

SC557: Pressure roller temperature does not increase

- Definition - [A]

During warm-up, pressure roller temperature does not increase when compared to the temperature 1 minute before.

- Possible causes -

- Pressure roller thermistor defective
- AC drive board defective
- Main control board defective

SC558: Zero cross signal abnormal

- Definition - [A]

Zero cross signals are not detected within a certain period.

- Possible causes -

- Main control board defective

1.9 COMMUNICATION

SC600: Communication error between main control and operation panel boards

- Definition - [B]

The main CPU cannot communicate with the operation panel CPU properly.

- Possible causes -

- Poor connection between main control board and operation panel board
- Main board defective
- Operation panel defective

SC601: Communication error between main control and scanner control boards

- Definition - [B]

The main CPU cannot communicate with the scanner control CPU properly.

- Possible causes -

- Poor connection between main control board and scanner control board (optical fiber cable)
- Optical fiber cable defective
- Main control board defective
- Scanner control board defective
- DC power supply board defective (no dc 5V input to scanner control board)

SC602: Communication error between main control and transfer belt motor drive boards

- Definition - [B]

The main CPU does not receive the response signal from the transfer belt drive board after 3 tries.

- Possible causes -

- Poor connection between main control board and transfer belt drive board
- Main control board defective
- Transfer belt drive board defective

SC603: Communication error within main control board

- Definition - [B]
  The CPUs on the main control board cannot communicate properly with each other.

- Possible causes -
  - Main control board defective

SC604: Serial signal error in main control board

- Definition - [B]
  Writing and reading serial signals for the DRAM produces discrepancies.

- Possible causes -
  - Main control board defective

SC605: Communication error between main control and IPU boards

- Definition - [B]
  The main CPU cannot communicate with the IPU CPU properly.

- Possible causes -
  - Poor connection between main control board and IPU board
  - Main control board defective
  - IPU board defective

SC622: Communication error between main control board and display editor I/F board

- Definition - [C]
  The main CPU cannot start communication with the editor I/F properly.

- Possible causes -
  - Poor connection between main control board and the display editor I/F board
  - Main control board defective
  - Display editor I/F board defective

SC623: Communication error between main control board and projector unit

- Definition - [B]

The main CPU cannot start communication with the projector unit properly.

- Possible causes -

- Poor connection between main control board and projector unit
- Main control board defective
- Option interface board defective
- Projector control board defective

1.10 OPTIONAL EQUIPMENT

SC700: DJF feed-in motor abnormal

SC701: DJF belt drive motor abnormal

SC702: DJF feed out motor abnormal

- Definition - [D]

The encoder pulse is not detected by the DJF main board under each motor on condition. The first time, an original jam occurs. The second time, an SC is displayed.

- Possible causes -

- DJF feed-in motor defective
- DJF belt drive motor defective
- DJF feed out motor defective

SC703: Size detection encoder pulse error

- Definition - [C]

The encoder pulse from the pull-out roller is not detected by the DJF main board. The first original jam will not display an SC. The second jam, however, will display an SC code.

- Possible causes -

- Pulse generator defective
- Original length detection error
- Original has slipped

SC704: DJF friction belt motor abnormal

- Definition - [D]

The encoder pulse is not detected by the DJF main board under the friction belt motor on condition. The first original jam will not display an SC. The second jam, however, will display an SC code.

- Possible causes -

- Friction belt turn sensor defective
- Friction belt motor defective
- Pulse generator defective
- Some tension has been applied to the friction belt

SC730: Sorter motor abnormal

- Definition - [B]
  The encoder pulse is not detected by the sorter control board for 200 ms after the sorter motor starts. A paper jam indication is displayed the first time. An SC is displayed the second time.

- Possible causes -
  - Sorter motor defective

SC790: Projector lamp does not turn on

- Definition - [C]
  The projector lamp does not turn on 100 ms after 10 V (or more) is applied to the lamp.

- Possible causes -
  - Projector lamp open
  - Thermofuse blown

SC791: Projector lamp does not turn off

- Definition - [C]
  The projector lamp stays on when it should turn off.

- Possible causes -
  - Projector lamp regulator defective

SC792: Projector lamp overheat

- Definition - [C]
  The projector control board detects a lamp overheat condition through the thermistor.

- Possible causes -
  - Projector lamp regulator defective
  - Thermistor defective

1.11 OTHERS

SC900: Bk-total counter not on

- Definition - [B]
  The Bk-total counter does not turn on.

- Possible causes -
  - Bk-total counter defective
  - DC power supply board defective (FU803, FU804)

SC901: Bk-total counter not off

- Definition - [B]
  The Bk-total counter does not turn off.

- Possible causes -
  - Bk-total counter defective

SC902: FC-total counter does not turn on

SC903: FC-total counter does not turn off

- Definition - [B]
  The FC-total counter does not turn on or off.

- Possible causes -
  - FC-total counter defective

1.12 ACC Control

SC910: ACC Calculation Error (Letter Mode: Bk)

SC911: ACC Calculation Error (Letter Mode: C)

SC912: ACC Calculation Error (Letter Mode: M)

SC913: ACC Calculation Error (Letter Mode: Y)

SC914: ACC Calculation Error (Photo Mode: Bk)

SC915: ACC Calculation Error (Photo Mode: C)

SC916: ACC Calculation Error (Photo Mode: M)

SC917: ACC Calculation Error (Photo Mode: Y)

- Definition - [D]

  Even if the test pattern has been scanned in, the CPU on the IPU could not find the appropriate adjustment table to approximate the actual curve to the target gamma curve.

- Possible Causes -

  - IPU defective

SC920: ACC not performed (internal error)

- Definition - [D]

  Under any of the following conditions, the ACC will not performed.

  1) Process Control self-check error, ID sensor error, Drum potential sensor error, Potential control error.
  2) When an SC occurs while the ACC test pattern is printed.
  3) When the TD sensor output (Vt) value becomes lower than 2.5 ± 1.0 V.

- Possible Causes -

  - The actual printer gamma curve changed over a big range (caused by process control self-check).
  - Main Control Board defective

2. BLOWN FUSE CONDITIONS

Fuse	Rating		Symptom (Main Switch: ON)
	110 - 120 V	220 – 240 V	
DC Power Supply Board			
FU801	8 A/125 V	5 A/250 V	No response
FU802	6.3 A/125 V		SC121 (Scanner HP sensor abnormal - stays on) or SC120 (Scanner HP sensor abnormal - stays off)
FU803	6.3 A/125 V		SC900 (Bk-total counter not on)
FU804	6.3 A/125 V		SC900 when the Start key is pressed, or misfeed occurs before registration when copy mode without black is selected.

3. OPERATION PANEL SELF-DIAGNOSTIC MODES

The machine can make a self-diagnosis on the operation panel (operation control unit).

3.1 OPERATION PANEL SELF-DIAGNOSTIC TESTS

The machine can perform the following tests on the operation control unit:

- Main RAM read/write test
- System ROM check sum test
- Video RAM read/write test
- VGA register test
- LCD pattern test
- Touch panel test
- LED/Conventional key test
- CMOS RAM test

3.2 STARTING THE OPERATIONAL DIAGNOSTIC PROGRAM

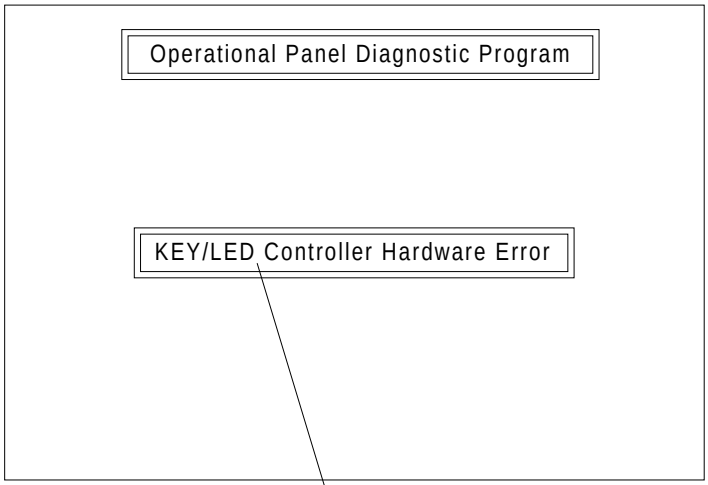

Message indicating a problem with the key/LED controller

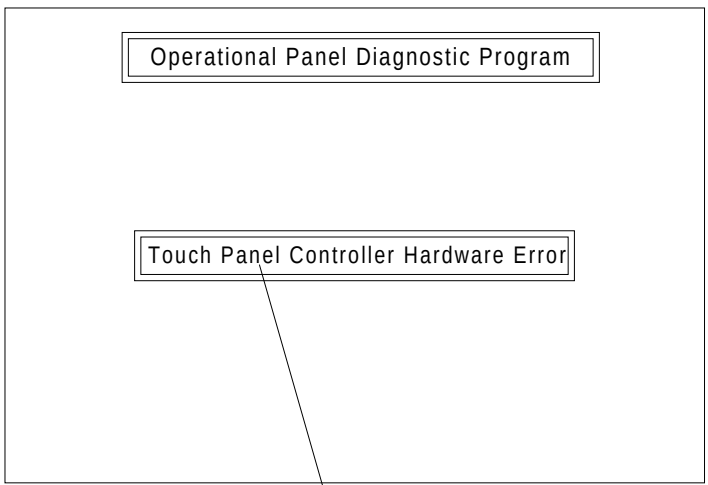

Message indicating a problem with the touch panel controller

1. To start the operational diagnostic program, turn on the main switch while pressing the [Option] key, then press the [Start] key.
2. If there is an error before the main menu is displayed, the operation control unit system displays the error message as shown in the above diagrams. This error message indicates that something is wrong inside the operation control unit.
   If this error message appears, turn off the main switch to forcibly terminate the operational diagnostic program.

3. When you start the operational diagnostic program, the system displays the point accuracy calibration screen.

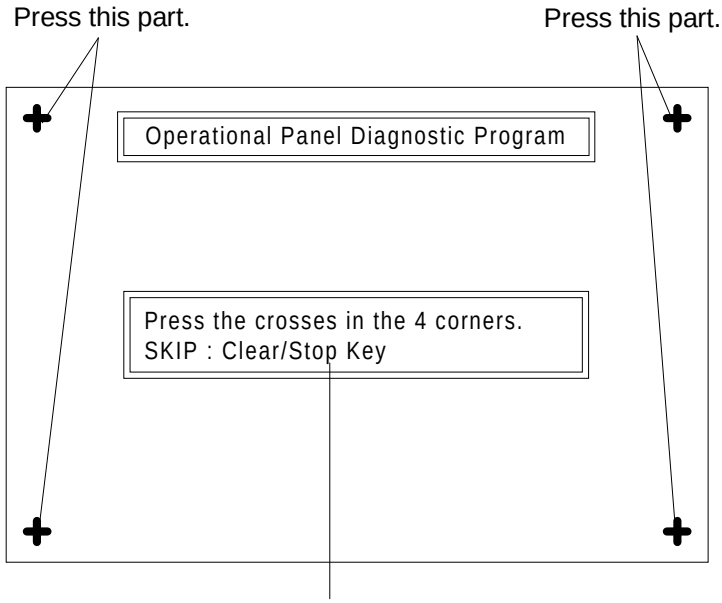

a) If the point accuracy calibration is necessary, touch the crosses in the four corners with the editor pen. This enables the correct touch key operation in the subsequent self diagnostic program screen.

NOTE: You can press the crosses in any order.
This calibration is independent from the point accuracy of the standard operation panel screen.

b) When the calibration is unnecessary, press the Clear/Stop key to go to the menu screen.

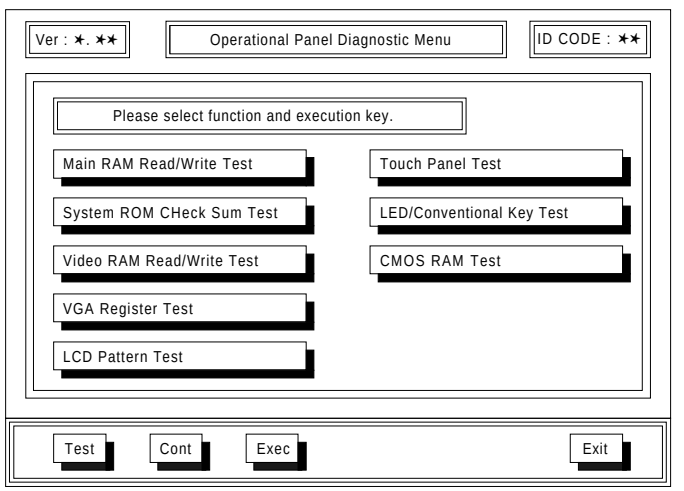

3.3 SELF-DIAGNOSTIC MODES

The following three self-diagnostic modes are available.

Usually, the test mode is the most convenient for self-diagnosis.

(1) Test mode

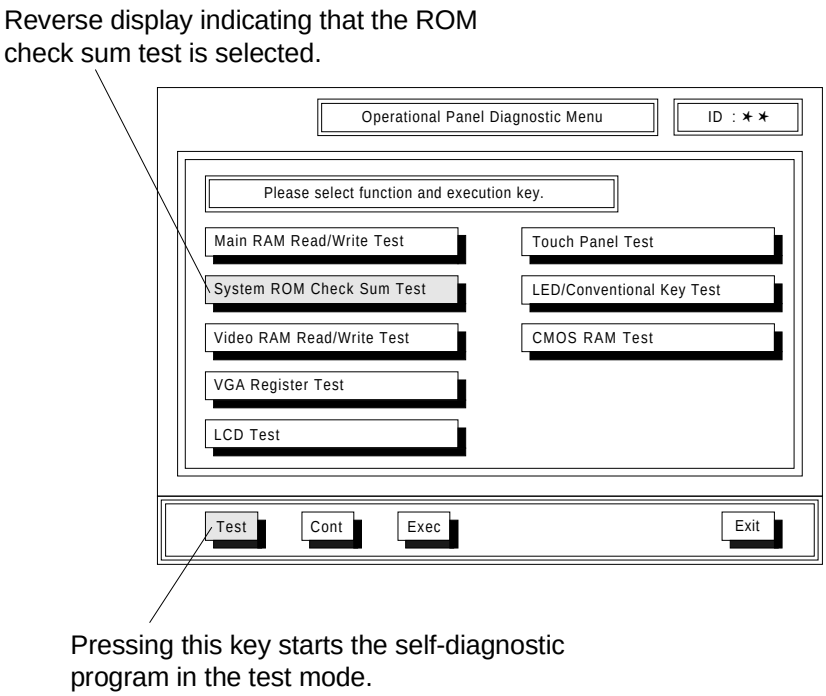

The self-diagnostic program in the test mode executes the selected test and all the subsequent tests.

Note that the following tests involve the use of touch panel operation to start the tests:

- LCD pattern test
- Touch panel test
- LED/conventional key test
- CMOS RAM test

If it detects a problem, the self-diagnostic system stops executing the test and displays information about the problem.

(2) Continuous mode

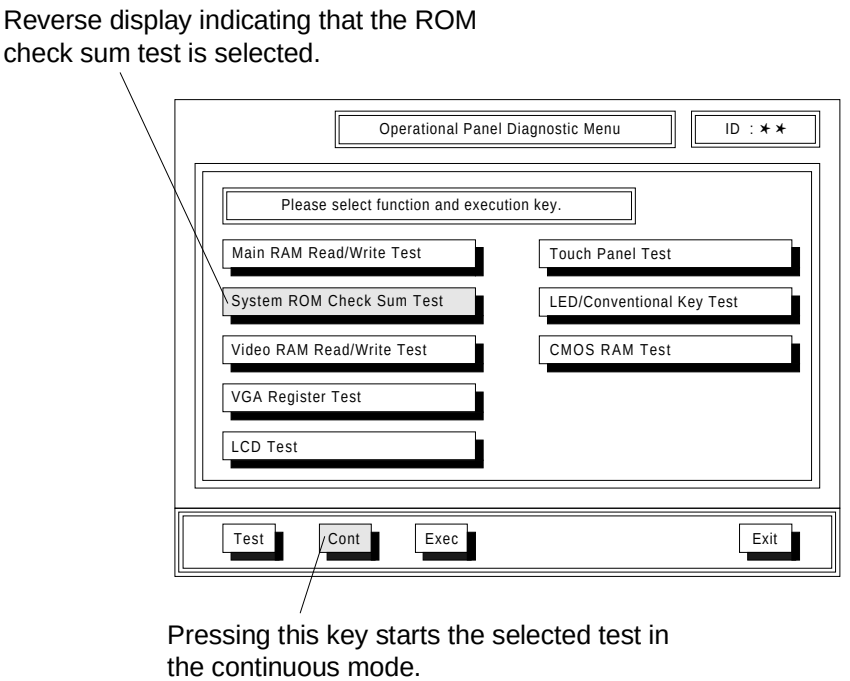

The self-diagnostic program in the continuous mode repeats the selected test without cessation. It displays the number of times it repeats the test. You can stop this test by using the End key. If a problem is detected, the machine stops the test and displays information about the problem. The self-diagnostic program does not support the continuous mode for the following tests:

- LCD pattern test
- Touch panel test
- LED/conventional key test
- CMOS RAM test

(3) Execution mode

The self-diagnostic program in the execution mode executes the selected test once.

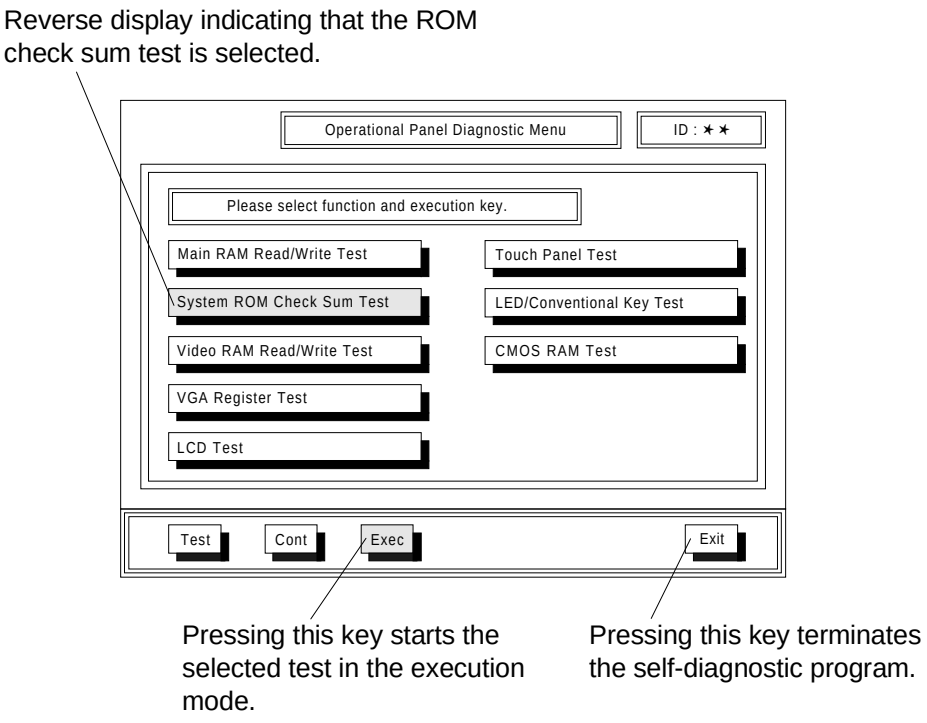

3.4 Details about Operation Panel Self-diagnosis

Select a test. Then, select a mode.

3.4.1 Main RAM read/write test

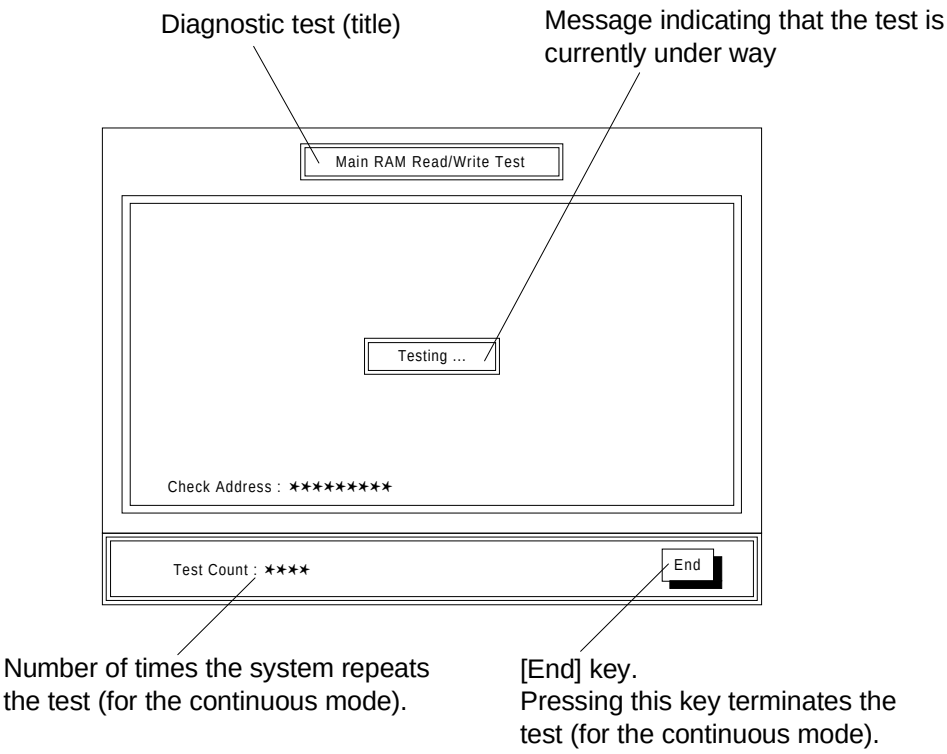

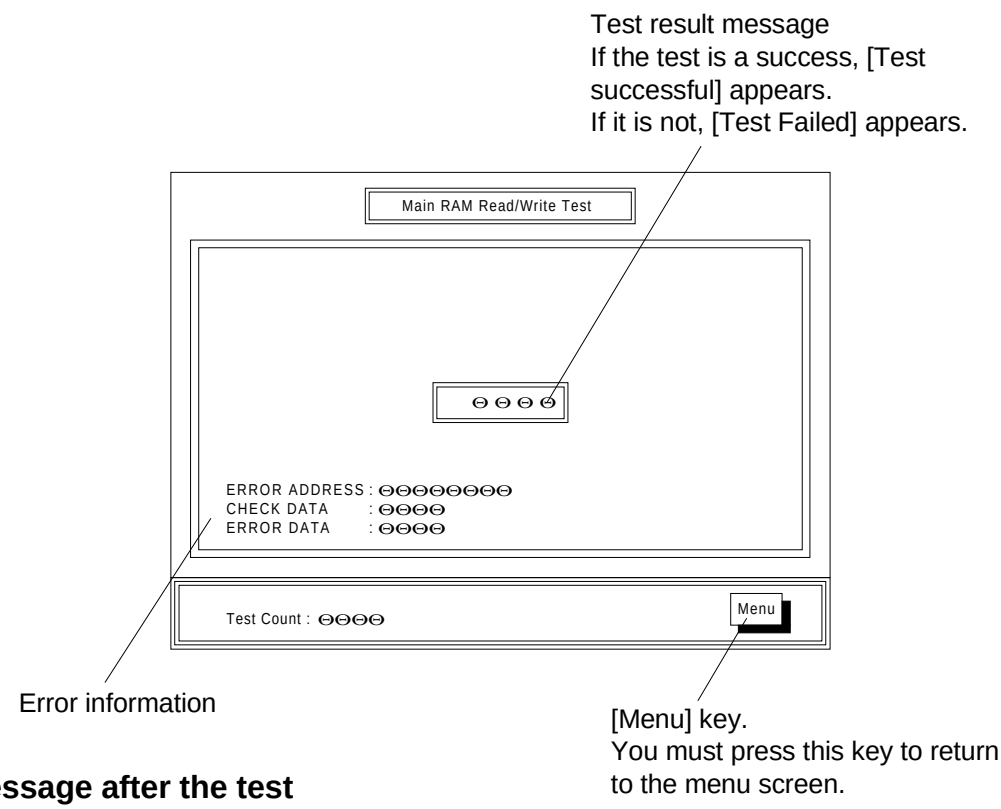

(i) Message after the test

(a) If the test is successful:

- [Test Successful] appears at the center of the screen.

(b) If the test is unsuccessful:

- [Test Failed] appears at the center of the screen.
- Error information appears at the lower left-hand corner of the screen.

Remarks: Error information

Error address	Segment + Offset for an area of 1 MByte or less
Check data	Value written at test execution time
Error data	Value read from the same position that was written into

(ii) Processing after the test

(a) If the test is successful:

- Test mode: The system executes the next test.
- Continuous mode: The system repeats the same test.
- Execution mode: The system displays [Menu].
  You must press [Menu] to return to the menu screen.

(b) If the test is unsuccessful:

- The system displays the error information and [Menu].
  You must press [Menu] to return to the menu screen.

3.4.2 System ROM check sum test

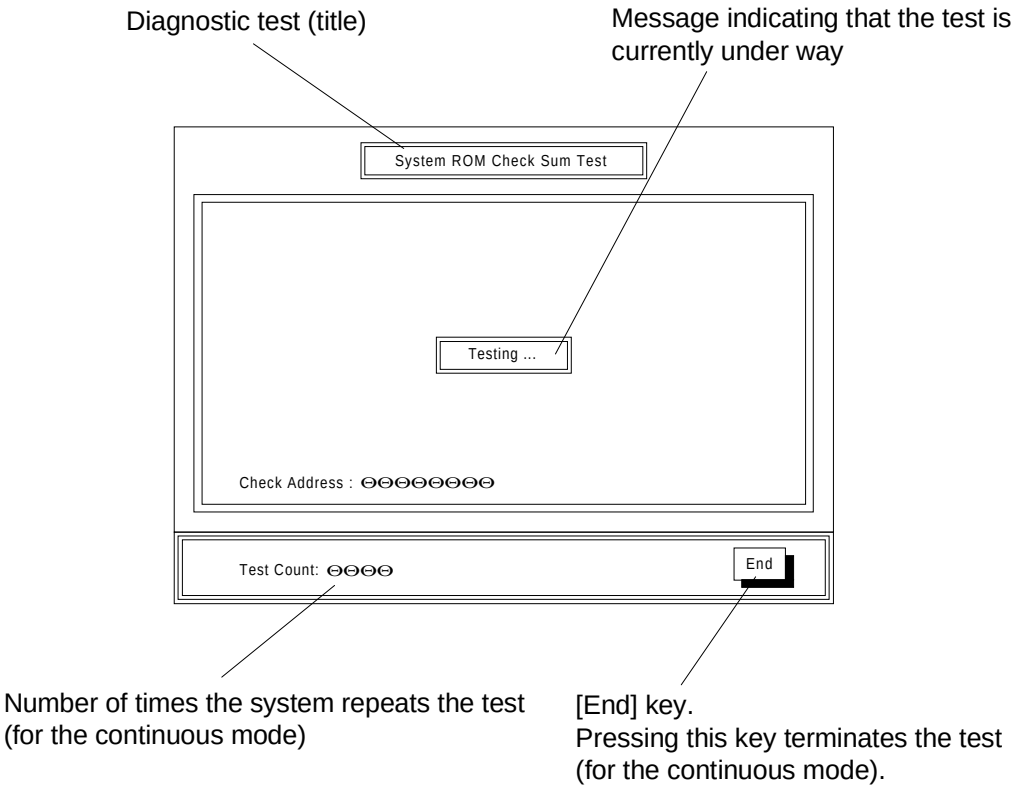

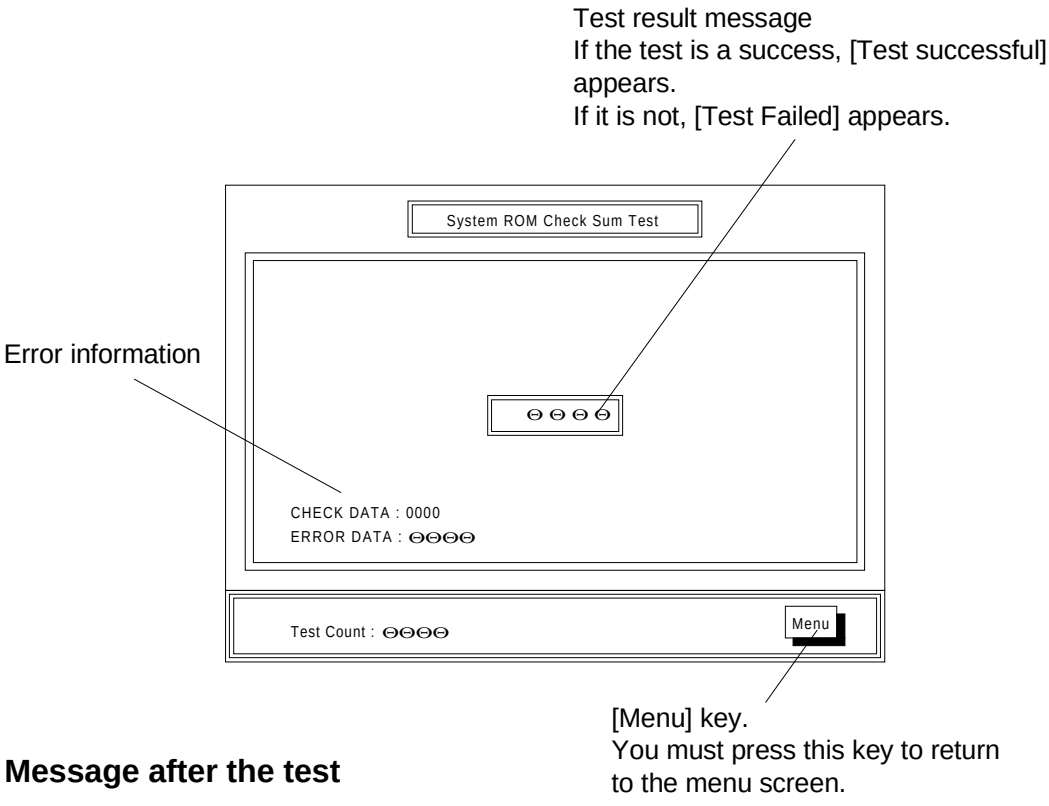

(i) Message after the test

(a) If the test is successful:

- [Test Successful] appears at the center of the screen.

(b) If the test is unsuccessful:

- [Test Failed] appears at the center of the screen.
- Error information appears at the lower left-hand corner of the screen.

Remarks: Error information

Check data	0000h is displayed because of 0 addition.
Error data	Result of adding data in word units

(ii) Processing after the test

(a) If the test is successful:

- Test mode: The system executes the next test.
- Continuous mode: The system repeats the same test.
- Execution mode: The system displays [Menu].
  You must press [Menu] to return to the menu screen.

(b) If the test is unsuccessful:

- The system displays the error message and [Menu].
  You must press [Menu] to return to the menu screen.

Trouble-shooting

3.4.3 Video RAM read/write test

NOTE: Vertical stripes (due to test data) appear on the LCD screen while the test is running. This should be considered normal.

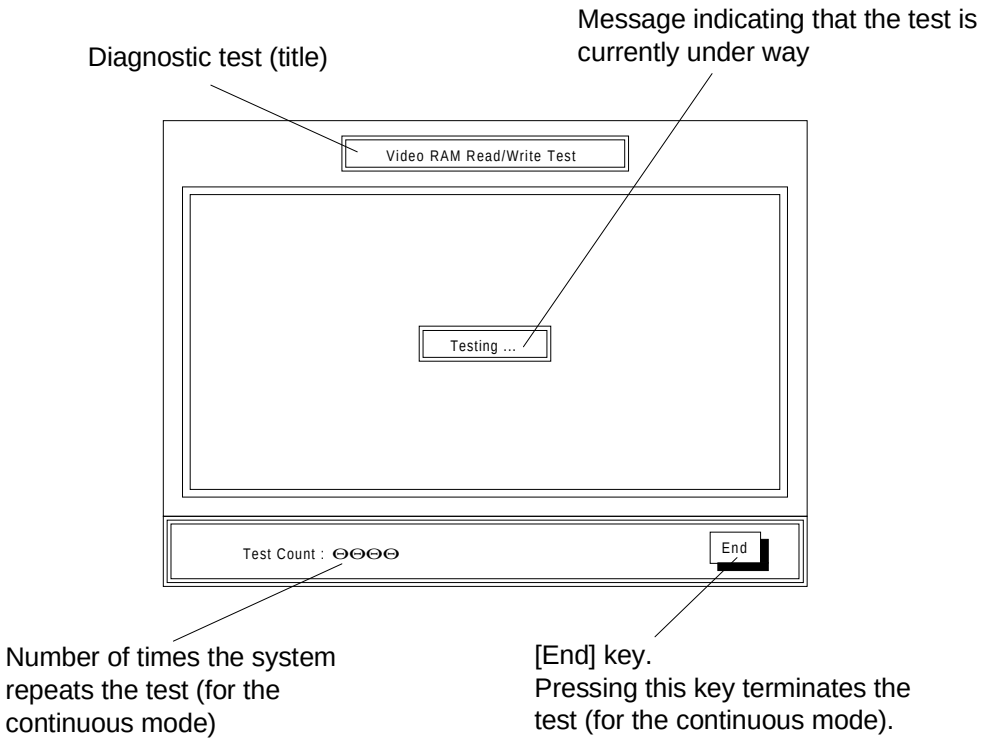

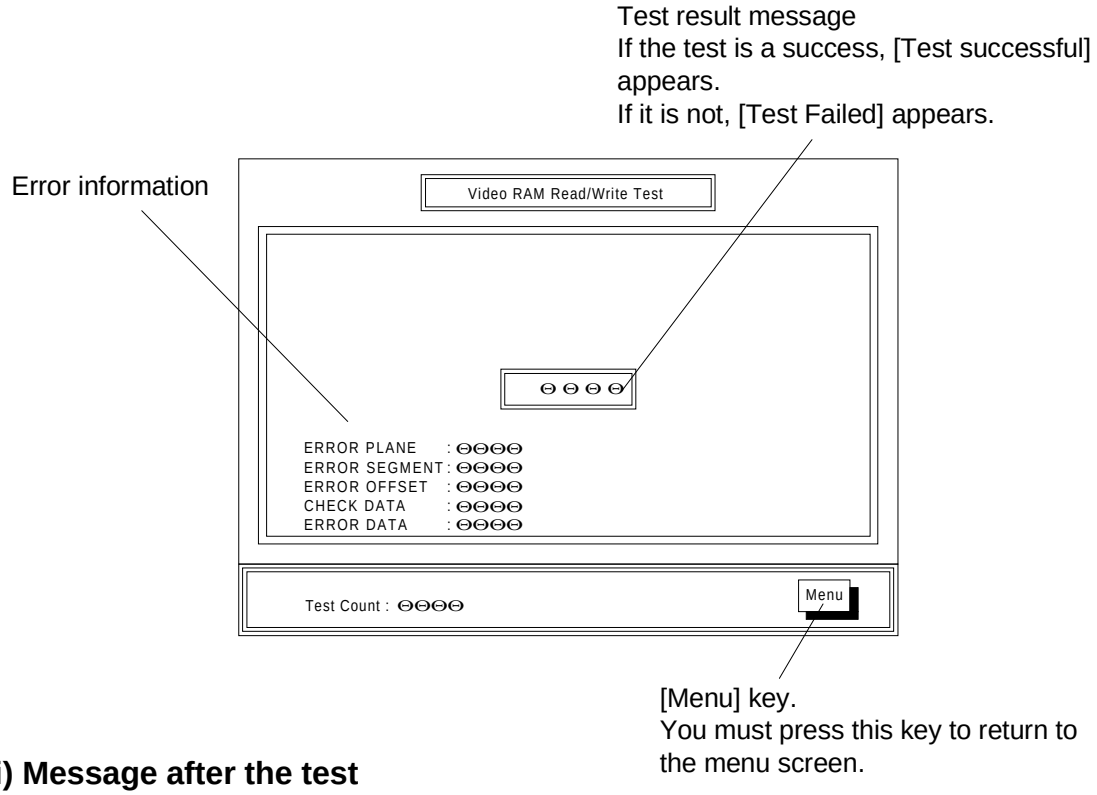

(i) Message after the test

(a) If the test is successful:

- [Test Successful] appears at the center of the screen.

(b) If the test is unsuccessful:

- [Test Failed] appears at the center of the screen.
- Error information appears at the lower left-hand corner of the screen.

Remarks: Error information

Error plane	Memory bank at switching time
Error segment	Segment (A000h or B000h) is displayed.
Error offset	A value from 0000h through FFFFh is displayed.
Check data	Value written at test execution time
Error data	Value read from the same position that was written into

(ii) Processing after the test

(a) If the test is successful:

- Test mode: The system executes the next test.
- Continuous mode: The system repeats the same test.
- Execution mode: The system displays [Menu].
  You must press [Menu] to return to the menu screen.

(b) If the test is unsuccessful:

- The system displays the error message and [Menu].
  You must press [Menu] to return to the menu screen.

3.4.4 VGA test

NOTE: The image on the LCD screen blurs for a moment while the test is running. This should be considered normal.

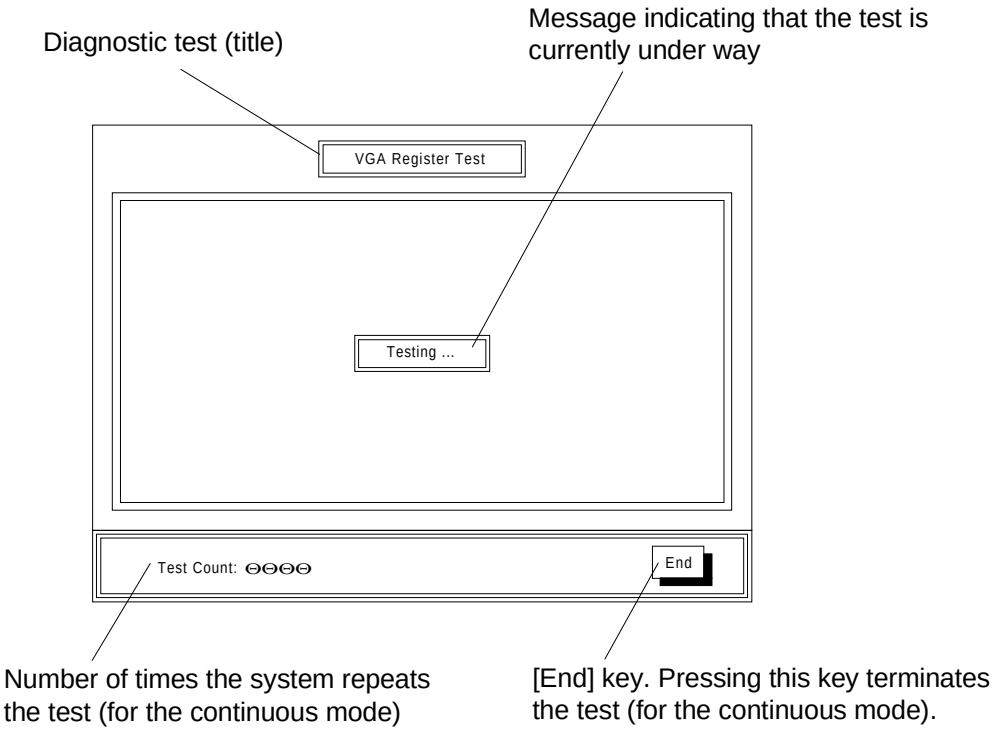

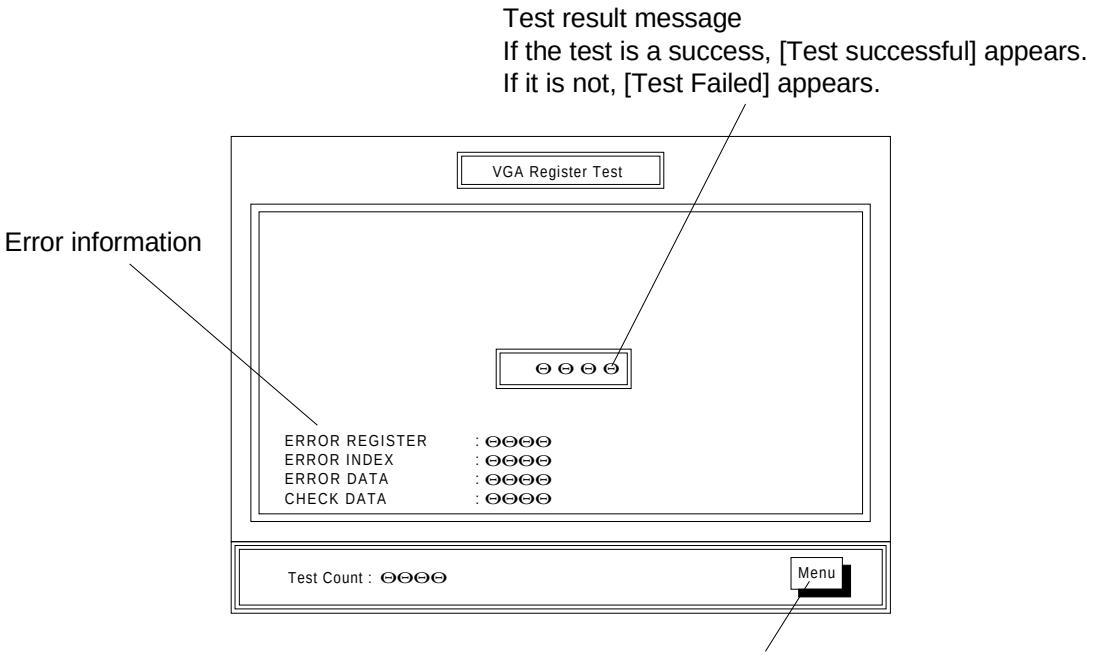

(i) Message after the test

(a) If the test is successful:

- [Test Successful] appears at the center of the screen.

(b) If the test is unsuccessful:

- [Test Failed] appears at the center of the screen.
- Error information appears at the lower left-hand corner of the screen.

Remarks: Error information

Error register	Register address is displayed.
Error index	Index for the register where an error occurred is displayed.
Check data	Value set in the register is displayed.
Error data	Read value is displayed.

(ii) Processing after the test

(a) If the test is successful:

- Test mode: The system executes the next test.
- Continuous mode: The system repeats the same test.
- Execution mode: The system displays [Menu].
  You must press [Menu] to return to the menu screen.

(b) If the test is unsuccessful:

- The system displays the error message and [Menu].
  You must press [Menu] to return to the menu screen.

3.4.5 LCD pattern test

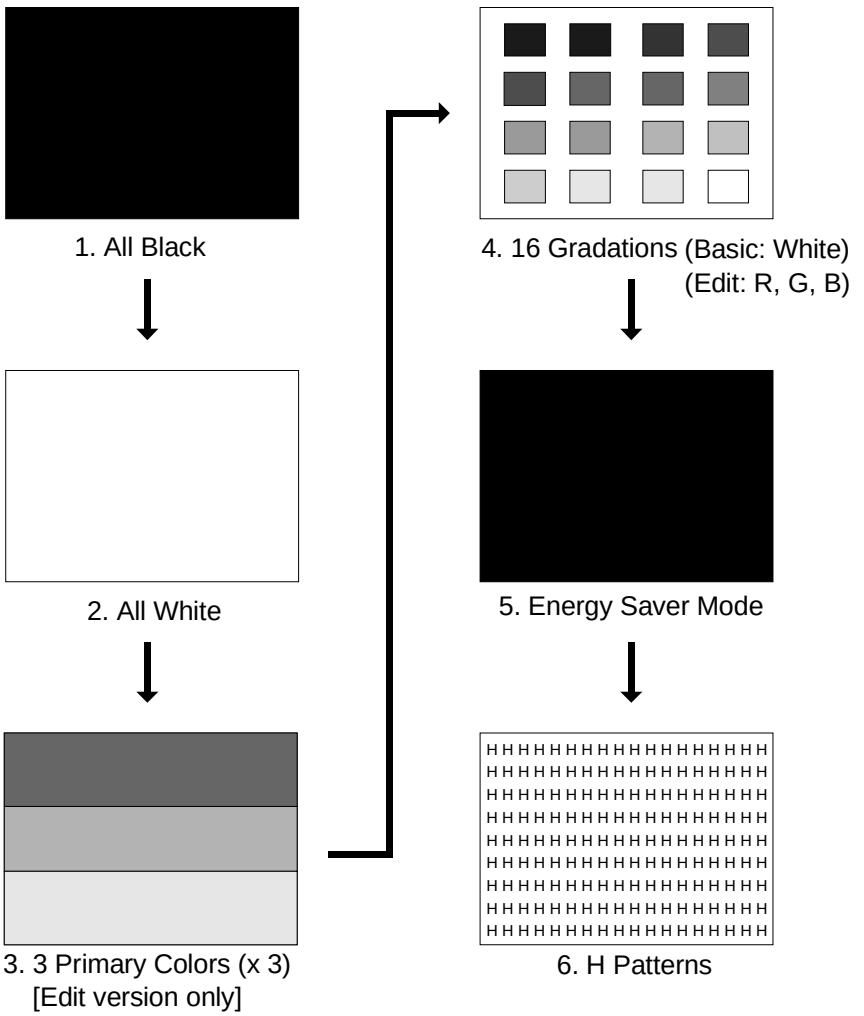

(i) Press any point on the LCD to display the above patterns in order:

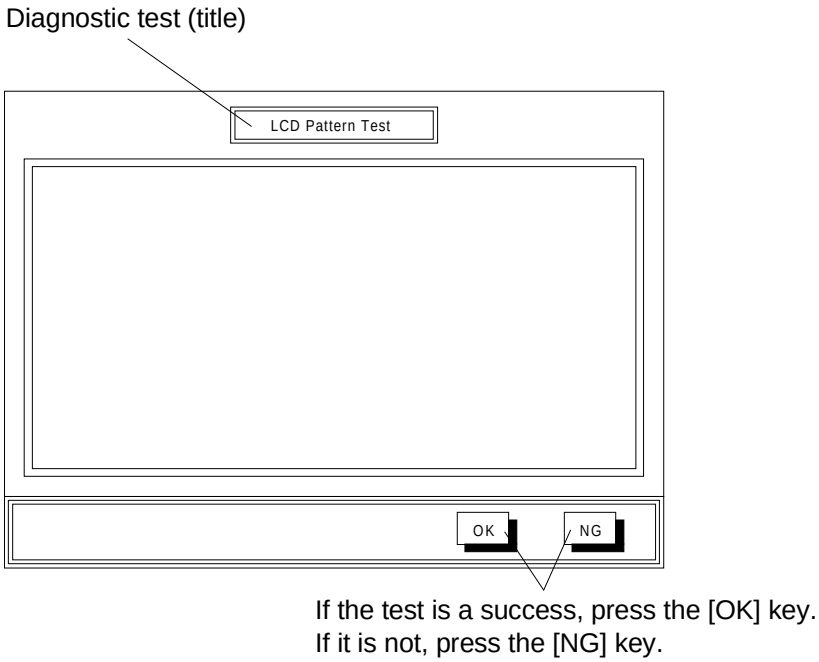

(ii) Processing after the test

(a) If you press the [OK] area:

- Test mode: The system executes the next test.
- Execution mode: The system displays [Menu].
  You must press [Menu] to return to the menu screen.

(b) If you press the [NG] area:

- The system displays [Menu].
  You must press [Menu] to return to the menu screen.

3.4.6 Touch panel test

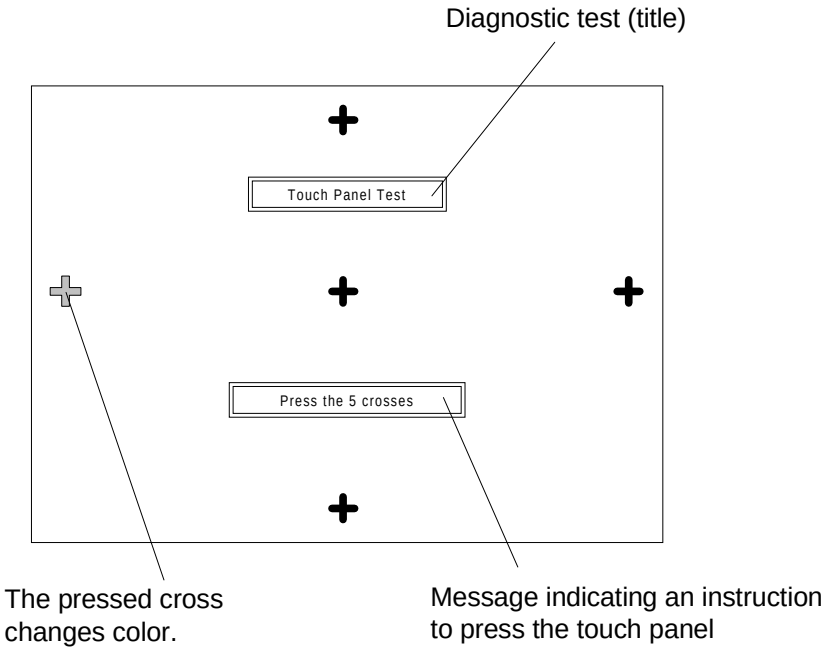

(i) Pressing a cross changes the color of the cross.

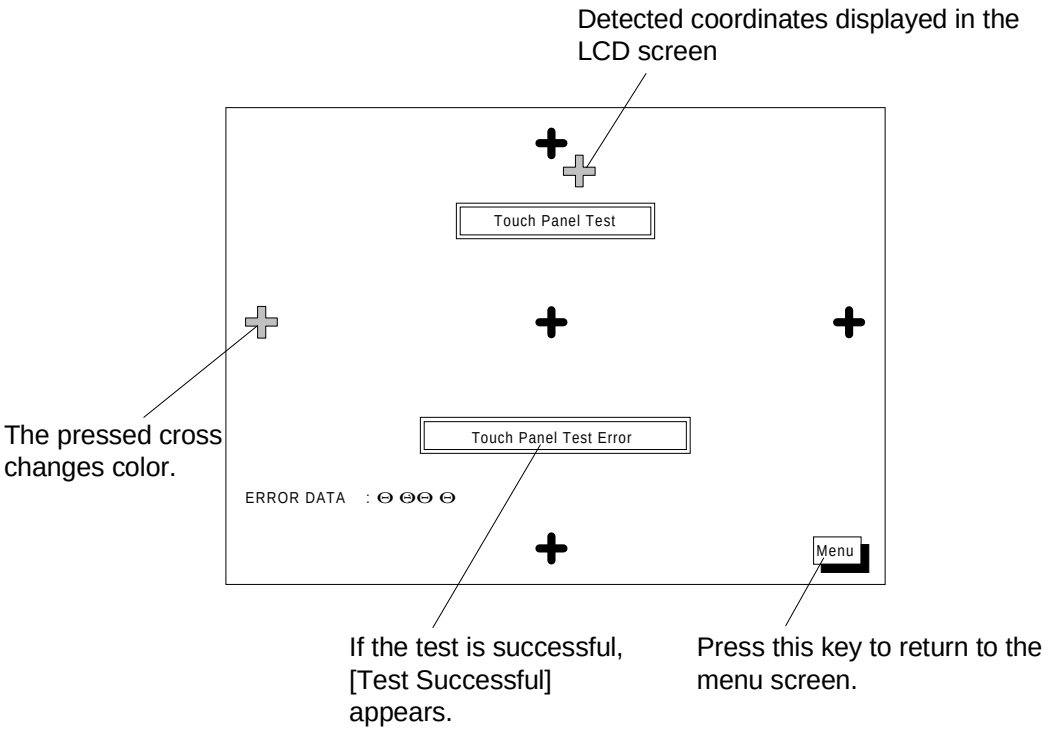

(ii) Message after the test

(a) If the test is successful:
- [Test Successful] appears at the center of the screen.

(b) If the test is unsuccessful:
- [Touch Panel Test Error] appears at the center of the screen.
- Error information appears at the lower left-hand corner of the screen.

Remarks: Error information is as follows.
- Error data (detected coordinates (X, Y))

(iii) Processing after the test

(a) If the test is successful:
- Test mode: The system executes the next test.
- Execution mode: The system displays [Menu].
  You must press [Menu] to return to the menu screen.

(b) If the test is unsuccessful:
- The system displays [Menu].
  You must press [Menu] to return to the menu screen.

3.4.7 LED/Conventional key test

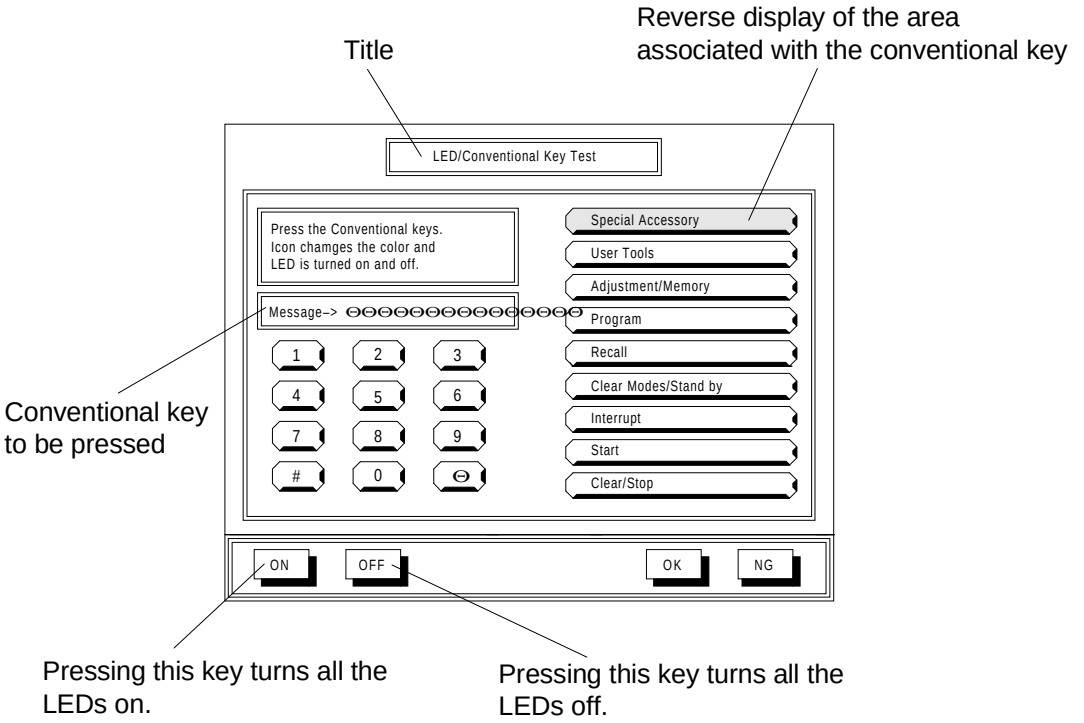

(i) Pressing a conventional key causes the events shown below.

1. The buzzer sounds.
2. The associated LED lights (it goes out when you press the key again).
3. The associated LCD area changes color.

(ii) Pressing a touch panel key also causes the event shown below.

[ON]: Turns all the LEDs on.
[OFF]: Turns all the LEDs off.
[OK]: Terminates the test.
[NG]: Terminates the test.

NOTE: If you do not press the conventional key shown in the [MSG:] area, an error occurs. (Pressing the same key again will not cause an error.)

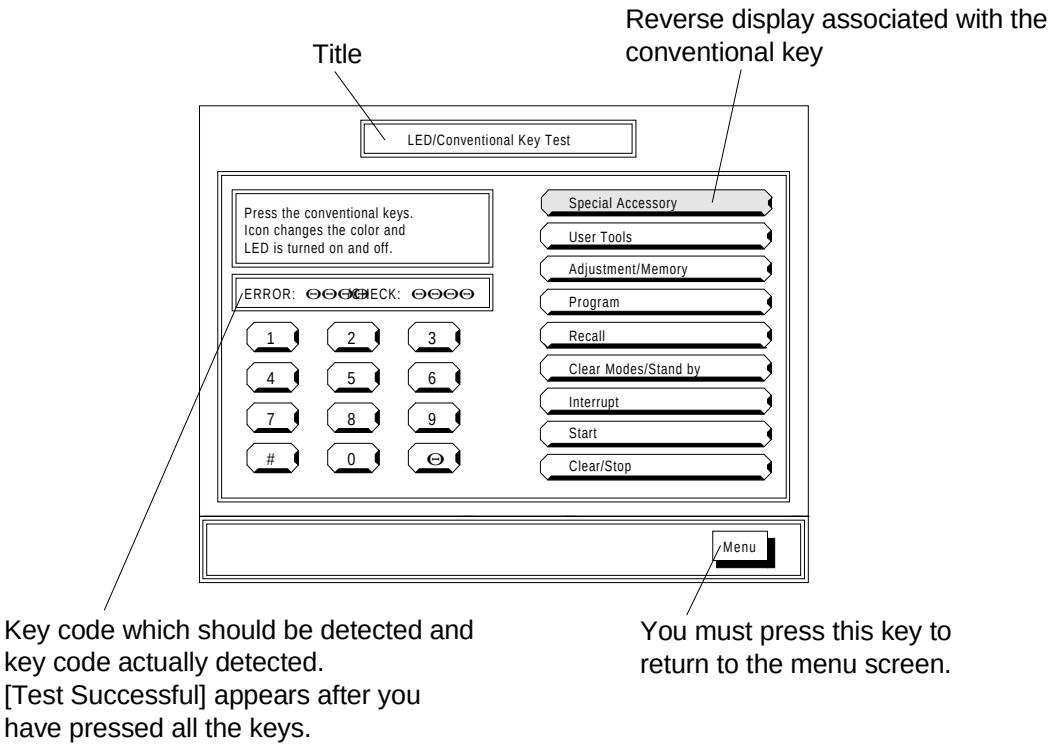

(iii) Processing after the test:

(a) If the test is successful:

- The system displays [Test Successful] in the [MSG:] display area.
- Test mode: The system executes the next test.
- Execution mode: The system displays [Menu].
  You must press [Menu] to return to the menu screen.

(b) If the test is unsuccessful:

- The system displays error information in the [MSG:] display area.

Error information:

[MSG: ✶✶✶✶ (Key code to be checked): ✶✶✶✶ (Key code detected)]

The system displays [Menu] after the test. You must press [Menu] to return to the menu screen.

3.4.8 (8) CMOS RAM test

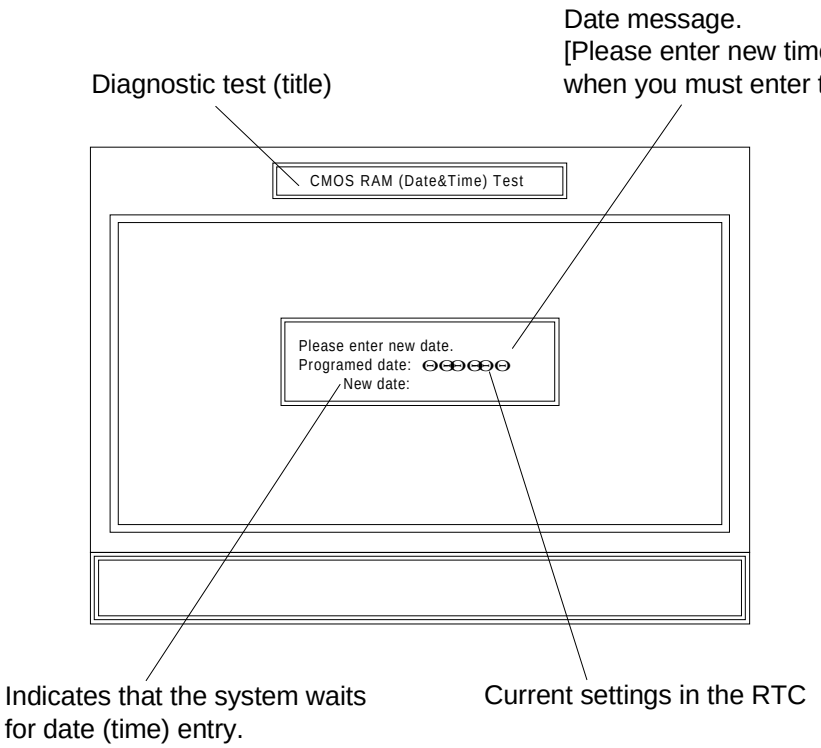

(i) Enter the date and time data with the Number keys (conventional keys).

NOTE: You can re-enter data with the Clear/Stop key.
If entering the new date or time is unnecessary, press Start key to go to the next screen

Example:

Entering the date (December 31, 1999) and time (23:59:55).

1. The system displays [Please enter new date].
2. Press the keys in the following order: "9", "9", "1", "2", "3", "1", and Start
3. The machine displays [Please enter new time].
4. Press the keys in the following order: "2", "3", "6" (wrong entry), Clear/Stop, "2", "3", "5", "9", "5", "5", and Start
5. The machine displays the settings.

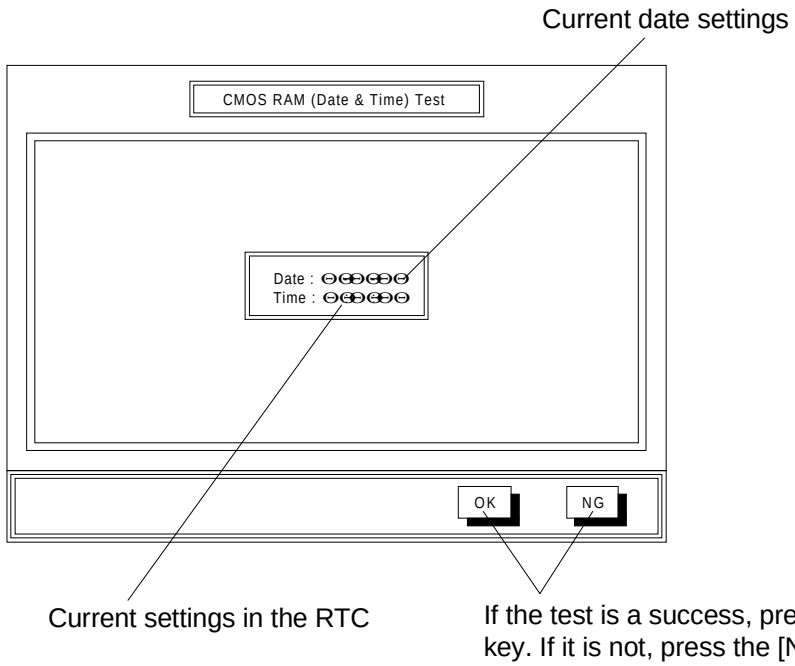

(ii) Test execution

- If the clock operation is normal, press [OK].

(iii) Processing after the test

The following shows what the system does after the test.

(a) If you press [OK]:

- Test mode: The system executes the next test.
- Execution mode: The system displays [Menu].
  You must press [Menu] to return to the menu screen.

(b) If you press [NG]:

- The system displays [Menu]. You must press [Menu] to return to the menu screen.

NOTE: The system does not support the continuous mode for the CMOS RAM test. It can only perform this test once in the execution or test mode.

4. PROBLEMS DETECTED AT TESTS AND SUSPECTED UNITS

(1) Problems detected at initial startup (power-on)

Problem	Cause	Suspected unit
LCD shows nothing.	LCD drive voltage is abnormal.	Operation control unit Op-ports 1 and 2
	Back-light is too dark.	Op-ports 1 and 2
	Control signal to the LCD is abnormal.	Operation control unit
Diagnostic program is not started ("Please wait" is displayed).	Start key detection is abnormal.	Op-ports 1 and 2
		Operation control unit

(2) Problems detected at initialization (point accuracy calibration)

Problem	Cause	Suspected unit
Pressing down on the touch panel does not provide reverse display.	Touch panel connector is defective.	Op-ports 1 and 2
	Analog voltage is not detected.	Op-ports 1 and 2
	Touch panel is defective.	Touch panel
	A/D detecting section is abnormal.	Operation control unit
	Detected data cannot be obtained.	Operation control unit
NVRAM abnormality message is displayed (when calibration is skipped).	Point accuracy data for back-up is cleared from NVRAM.	ROM board

(3) Problems detected in self-diagnostic mode

Problem	Cause	Suspected unit
Display is abnormal.	LCD is defective.	LCD
	Specified plotting data cannot be written into video RAM.	Operation control unit
Menu cannot be selected.	Interrupt signal from the touch panel cannot be detected.	Operation control unit

(4) Problems detected at the main RAM test

Problem	Cause	Suspected unit
Error message is displayed (at address C00000h or less) when the test is finished.	Written data is different from read data.	Operation control unit
Error message is displayed (at address C00000h or less) when the test is finished.	Written data is different from read data.	ROM board

(5) Problems detected at the system RAM test

Problem	Cause	Suspected unit
Error message is displayed when the test is finished.	ROM board is defective.	ROM board

(6) Problems detected at the video RAM test

Problem	Cause	Suspected unit
Error message is displayed when the test is finished.	Video RAM is defective.	Operation control unit

(7) Problems detected at the VGA RAM test

Problem	Cause	Suspected unit
Error message is displayed when the test is finished.	VGA chip and peripheral buses are defective.	Operation control unit

(8) Problems detected at the LCD pattern test

Problem	Cause	Suspected unit
LCD test pattern is abnormal.	VGA chip and control signals to the LCD are abnormal.	Operation control unit
	LCD is defective (there are dots missing, etc.).	LCD
Back-light is out of control (always ON).	Inverter is defective.	Op-ports 1 and 2
	Back-light control signal is abnormal.	Operation control unit

(9) Problems detected at the touch panel test

Problem	Cause	Suspected unit
LCD shows an error message.	Touch panel has low detection accuracy.	Op-ports 1 and 2

(10)Problems detected at the LED/Conventional key test

Problem	Cause	Suspected unit
LCD shows an error message.	Abnormal signal is detected when a key is pressed.	Op-ports 1 and 2
Reverse display is not obtained although a key is pressed.	Signal line for key data is broken, or the switch is damaged.	Operation control unit
LED does not light.	LED is damaged.	Op-ports 1 and 2
	Control signal line from the LED controller to the LED is broken.	Operation control unit
Buzzer does not sound.	Piezoelectric buzzer is damaged.	Op-ports 1 and 2
	Control signal line is broken.	Op-ports 1 and 2
	Controller is abnormal.	Operation control unit

(11) Problems detected at the CMOS RAM test

Problem	Cause	Suspected unit
Operation based on the date and time settings is abnormal.	CMOS RAM is abnormal.	Operation control unit
Time settings are cleared.	R.T.C. backup is abnormal.	Operation control unit

(12) End processing

Problem	Cause	Suspected unit
[System will be reset] remains displayed.	The system cannot be reset.	Operation control unit

DUAL JOB FEEDER

(Machine Code: A610)

1. SPECIFICATIONS

Original Feed Mode:
Automatic document feed mode
Automatic reverse document feed mode
Semi-automatic document feed mode
Combine 2 originals mode
Mixed sized mode
Preset mode

Original Size and Weight:

Thick original mode (default mode)
Use this setting for normal paper types
Maximum: A3, 11" x 17"
Minimum: B6, 5 1/2" x 8 1/2"
Weight: 52 ~ 128 g/m^2 (14-34 lb)

Thin original mode
Maximum: A3, 11" x 17"
Minimum: B6, 5 1/2" x 8 1/2"
Weight: 40 ~ 128 g/m^2 (11-34 lb)

Auto reverse mode
Maximum: A3, 11" x 17"
Minimum: B6 (lengthwise)
Weight: 52 ~ 105 g/m^2 (14-28 lb)

Combine two originals mode
Maximum: A4 (sideways), 8 1/2" x 11" (sideways)
Minimum: B5 (sideways), 5 1/2" x 8 1/2" (sideways)
Weight: 52 ~ 128 g/m^2 (14-34 lb)

Mixed size Mode
Maximum: A3, 11" x 17"
Minimum: B5, 8 1/2" x 11"
Weight: 52 ~ 80 g/m^2 (14-21 lb)

Original Table Capacity: 50 sheets at 80 g/m^2 (21 lb)
(or stack height of less than 5 mm)

Original Standard Position: Rear left

Original Separation: Feed and friction belt

Original Transport: One flat belt

Power Source:	DC24 V from the copier, 2.5 A (average)
Power Consumption:	70W
Dimensions (W x D x H):	680 x 522 x 133 mm (26.8" x 20.0" x 4.6")
Weight:	14.5 kg (32.0 lb)

2. COMPONENT LAYOUT

2.1 MECHANICAL COMPONENT LAYOUT

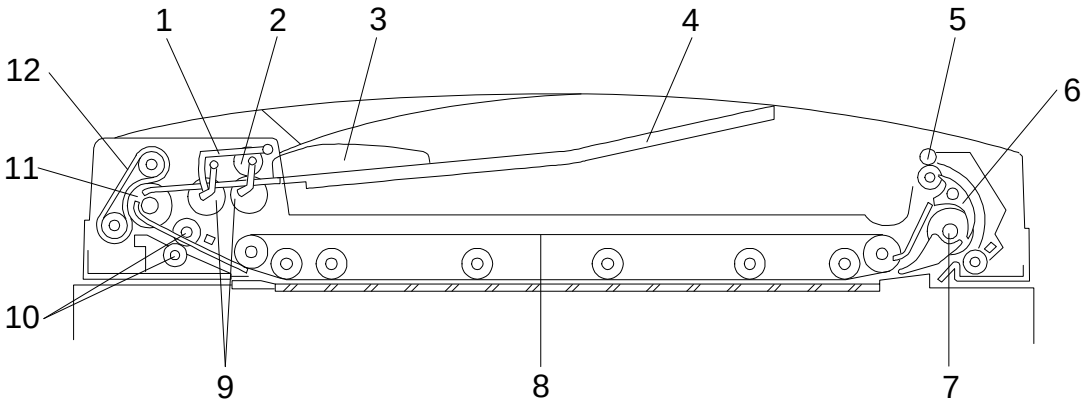

A610V500.wmf

1. Original Stopper
2. Press Roller
3. Side Fence
4. Original Table
5. Exit Roller
6. Inverter Pawl
7. Inverter Roller
8. Transport Belt
9. Pick-up Rollers
10. Pull-out Rollers
11. Feed Roller
12. Friction Belt

2.2 ELECTRICAL COMPONENT LAYOUT

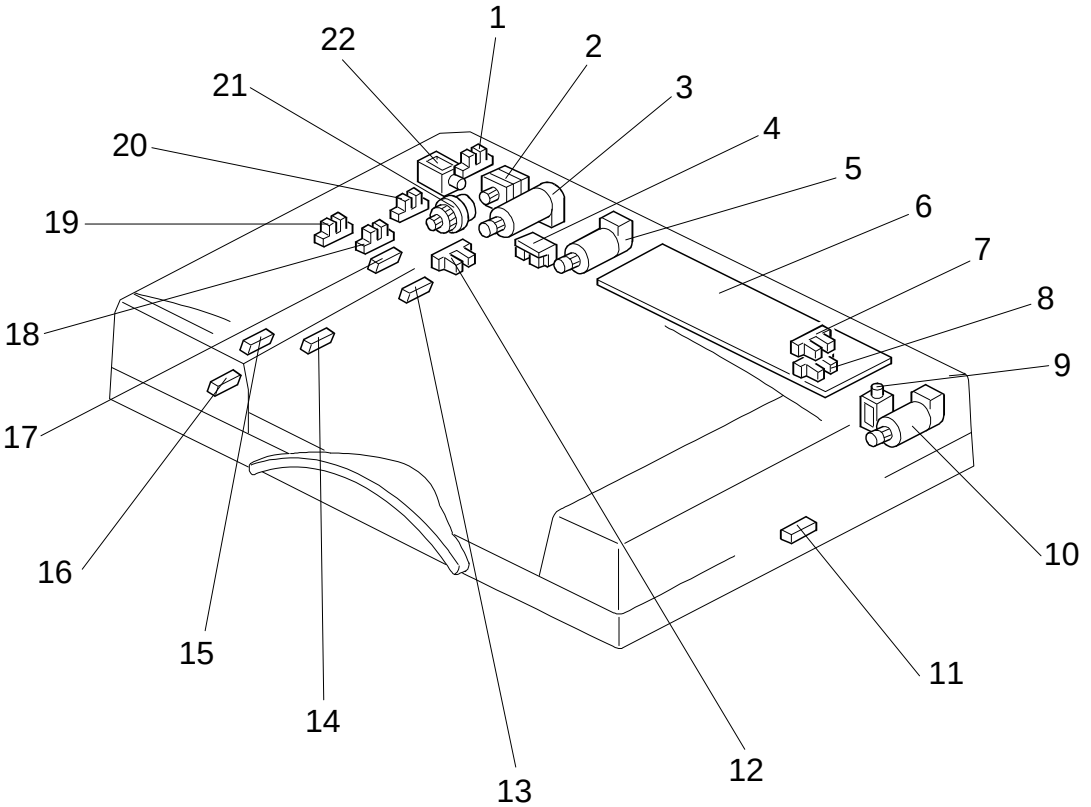

A610V501.wmf

1. Feed-in Cover Open Sensor
2. Friction Belt Motor
3. Feed-in Motor
4. Indicator Panel Lamps
5. Belt Drive Motor
6. DF Main Board
7. DF Position Sensor
8. APS Start Sensor
9. Inverter Solenoid
10. Feed-out Motor
11. Feed-out Sensor
12. Pulse Count Sensor
13. Registration-2 Sensor
14. Original Width-1 Sensor
15. Original Width-2 Sensor
16. Original Width-3 Sensor
17. Registration-1 Sensor
18. Original Set Sensor
19. Original Feed Sensor
20. Friction Belt Turn Sensor
21. Feed-in Clutch
22. Stopper Solenoid

3. ELECTRICAL COMPONENT DESCRIPTION

Refer to the electrical component layout on the reverse side of the point-to-point diagram for symbols and index numbers.

Symbol	Name	Function	Index No.
Motors			
M1	Friction Belt	Drives the friction belt.	2
M2	Feed-in	Drives the feed-in system (pick-up, feed, pull-out rollers)	3
M3	Belt Drive	Drives the transport belt.	5
M4	Feed-out	Drives the feed-out and the inverter system.	10
Sensors			
S1	Feed-in Cover Open	Detects whether or not the feed-in cover is open.	1
S2	DF Position	Informs the CPU whether the DJF is in the up or down position.	7
S3	APS Start	Informs the CPU when the DJF is being closed so that the original size sensors in the main body can check the original size (in platen mode).	8
S4	Feed-out	Checks for original misfeeds and sets original stop timing when in auto-reverse mode.	11
S5	Pulse Count	Counts the pulses generated by the pulse generator disc to determine the original length.	12
S6	Registration-2	Detects the leading edge of the original to turn off the feed-in clutch and to change the feed-in motor speed. Also detects the original length.	13
S7	Original Width-1	Detects the original width.	14
S8	Original Width-2	Detects the original width.	15
S9	Original Width-3	Detects the original width.	16
S10	Registration-1	Detects the original length and original jam by detecting the trailing edge of the original.	17
S11	Original Set	Detects if originals have been placed on the feed table.	18
S12	Original Feed	Detects if the originals have reached the feed roller or not.	19
S13	Friction Belt Turn	Counts the pulses generated by the pulse generator disk to monitor the friction belt motor.	20

Symbol	Name	Function	Index No.
Solenoids			
SOL1	Inverter	Inverts the original when copying two-sided originals.	9
SOL2	Stopper	Lifts the original stopper and lowers the press roller to feed the set of originals to the feed roller.	22
PCBs			
PCB1	DF Main Board	Controls all DJF functions.	6
Magnetic Clutch			
CL1	Feed-in	Transmits the feed-in motor drive to the pick-up, feed, and pull-out rollers.	21
Indicator Lamps			
L1	Ready	Informs the operator that the DJF is in the down position.	4
	Auto	Informs the operator that the auto feed mode is available.	

4. ORIGINAL PICK-UP MECHANISM

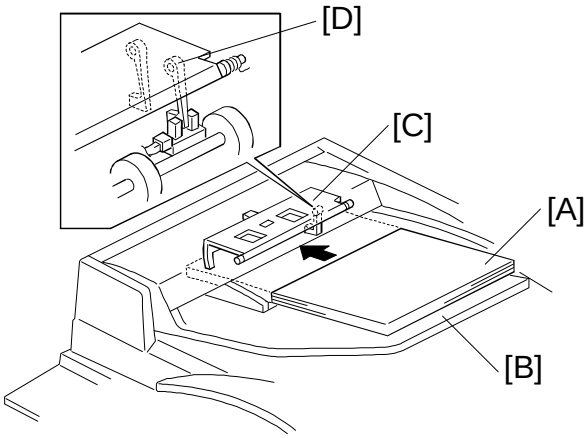

A610D500.wmf

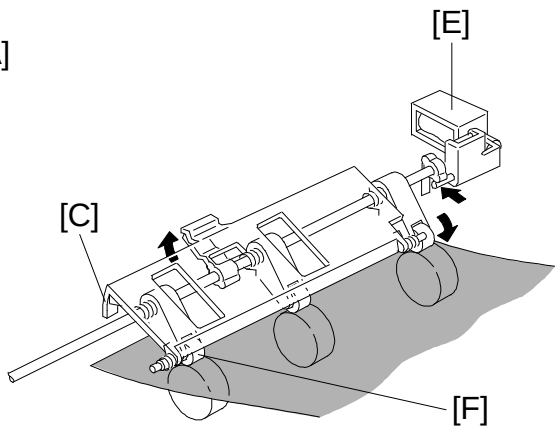

A610D501.wmf

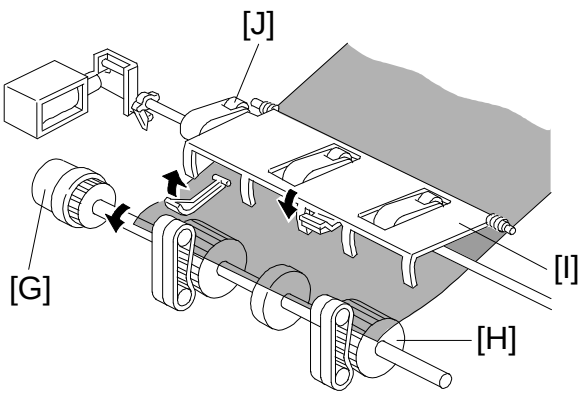

A610D502.wmf

When an original [A] is placed on the original table [B], the leading edge is stopped by the stopper [C], and the feeler [D] is pushed out of the original set sensor. The Insert Original indicator light goes out and the DJF informs the copier's CPU that the originals have been placed on the original table.

When the Start key is pressed, the copier's CPU sends the feed-in signal to the DJF. On receipt of this signal, the stopper solenoid [E] activates to raise the stopper, which allows the originals to be fed in, and to lower the press rollers [F] to press the originals against the pick-up rollers, as shown.

The feed-in clutch [G] also activates when the DJF receives the feed-in signal. 200 ms after the feed-in clutch activates, the feed-in motor feeds all originals to the feed roller [H].
When the originals reach the feed roller, the stopper solenoid de-activates to lower the original stopper [I] and to lift up the press rollers [J].

5. SEPARATION AND FEED MECHANISM

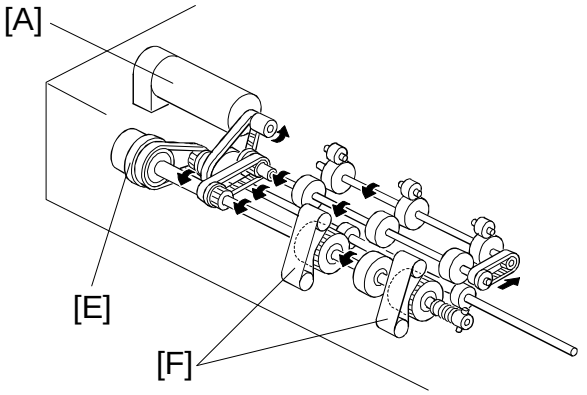

A610D505.wmf

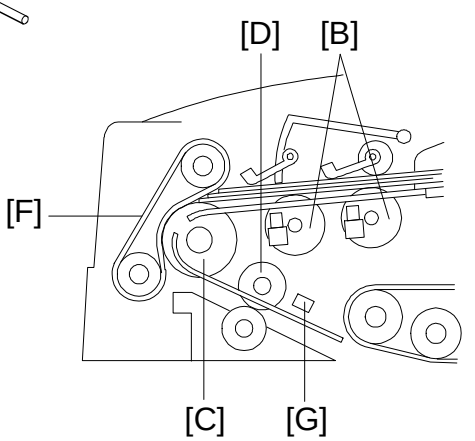

A610D504.wmf

Drive from the feed-in motor [A] is transmitted to the pick-up [B], feed [C], and pull-out rollers [D], through the feed-in clutch [E], as shown. The feed roller and the friction belts [F] are used to feed and separate the originals.

Original feed starts when the feed roller starts turning to advance the bottom original of the stack. The feed roller moves the original past the separation belt because the driving force of the feed roller is greater than the resistance of the friction belt. The friction belt prevents multiple feeds because the resistance of the friction belt is greater than the friction between original sheets. At this time, the feed-in motor rotates slowly to ensure proper feed and separation of the original.

When the leading edge of the original activates registration sensor-2 [G], the feed-in clutch turns off and the motor rotates more quickly. To reduce mechanical load, only the pull-out rollers are driven to feed the original to the exposure glass.

To prepare the next original, it is separated in the same manner as explained above, and stopped when the leading edge is detected by the registration sensor-2 [G]. When it is time to feed this sheet to the exposure glass, the feed-in motor rotates at high speed.

6. FRICTION BELT DRIVE MECHANISM

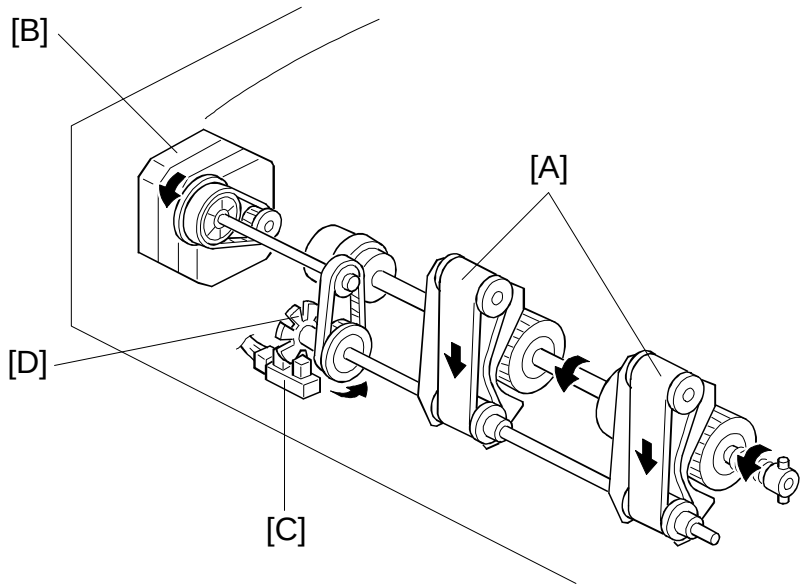

A610D506.wmf

The friction belts [A] are driven by the friction belt drive motor [B] through timing belts, as shown.

When the Start key is pressed, the friction belts are not rotated (the motor is electrically ON but the motor does not turn as the voltage is too low; see the timing chart in section 13.1). As the leading edge of the original activates the registration sensor-2, the friction belts rotate in the reverse direction to reverse out the next original from in between the friction belts and feed rollers. This results in less of a chance for originals to be damaged or become dirty. Also, the area of the friction belt that contacts the feed roller or the original changes, to prevent multiple feeding.

The friction belt turn sensor [C] counts the pulses generated by the pulse generator disk [D] on the friction belt shaft. The sensor detects friction belt motor error conditions.

7. ORIGINAL SIZE DETECTION

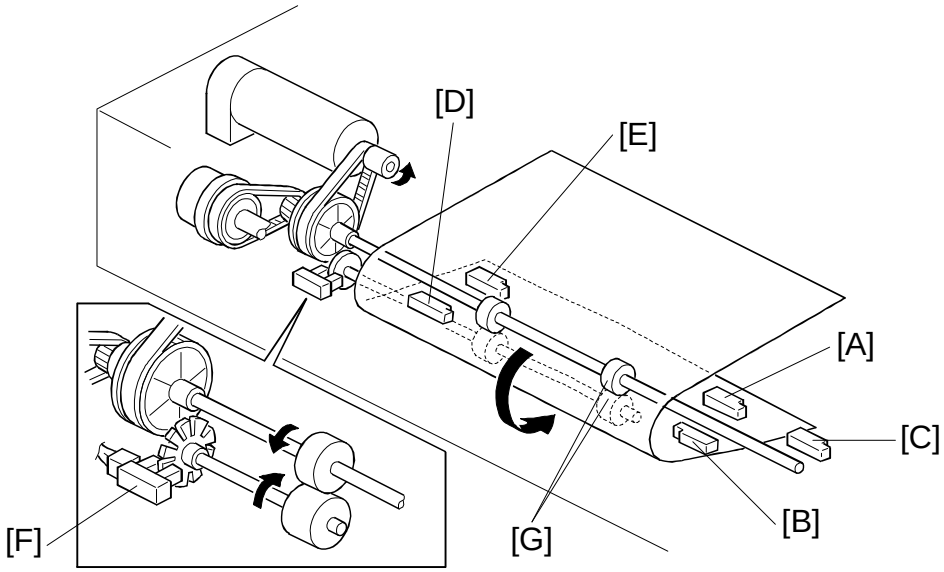

A610D507.wmf

The DJF detects original width through the on/off combination of the three original width sensors-1 [A], -2 [B], -3 [C]. It also detects the original length with the registration sensors-1 [D], -2 [E] and the pulse count sensor [F].

The DJF CPU counts the pulses between registration sensor-2 [E] on timing, and registration sensor-1 [D] off timing. Based on this pulse count, the CPU determines the original length.

The reasons for using two registration sensors are:

1) Registration sensor-2 [E] is used to stop the pre-fed original, which waits until the previous original is fed out. For precise control, the original stop position must be after the pull-out rollers [G]. Therefore, registration sensor-2 is placed after the pull-out rollers.
2) Registration sensor-1 [D] checks the trailing edge of the original. This check is used to place the original in the correct position on the exposure glass. Because this is a fast feeding mechanism, some distance is required between the sensor and the original scale. If sensor-2 was used to detect the stop timing, there would not be enough time to stop the original at the correct place. Therefore, registration sensor-1 is used for this; it is placed 34.9 mm before sensor-2.

   (The diagram at the start of section 8-1 shows the position of the sensors with respect to the rollers.)

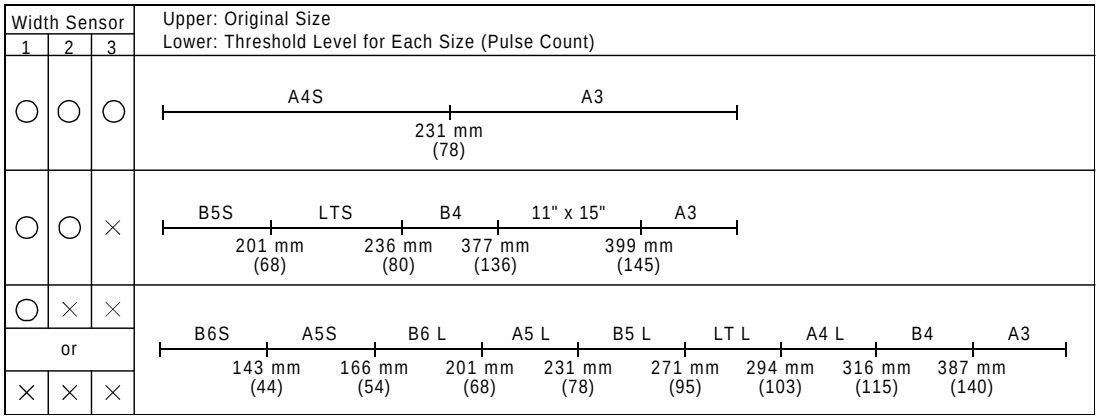

○: Paper Present
×: No Paper
S : Sideways
L : Lengthwise

A610D508.wmf

Width Sensor Position

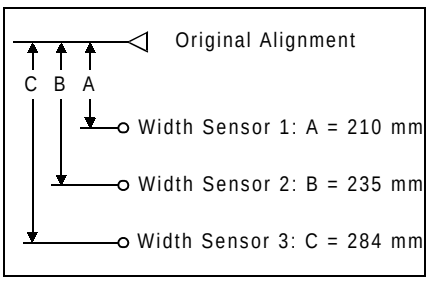

A610D509.wmf

The original size is determined by the combination of the detected original width and length as shown above. Note that when only width sensor 1 detect that paper is preset, or if all width sensors are off, the original size is detected only by the pulse count sensor data.

8. TRANSPORT MECHANISM

8.1 BASIC OPERATION

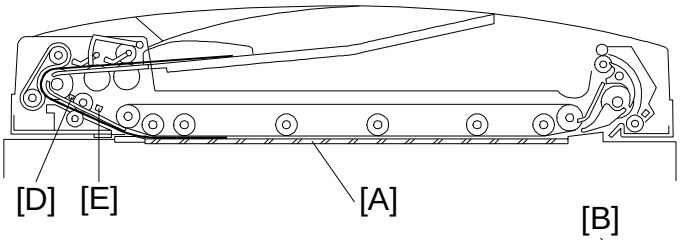

A610D511.wmf

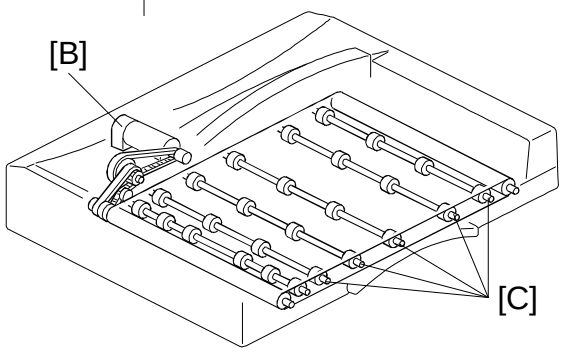

A610D512.wmf

The transport belt [A] is driven by an independent motor called the belt drive motor [B]. The belt drive motor starts rotating soon after the copier sends an original feed-in signal. Inside the transport belt are five pressure roller shafts [C], which achieve the proper amount of pressure between the belt and the original.

When the leading edge of the original reaches the exposure glass, the original is transported by the transport belt (the belt drive motor turns on 200 ms after the start key is pressed).
When the trailing edge of the original passes through registration sensor-1 [D], the feed-in motor turns off. When the trailing edge of the original passes through registration sensor-2 [E], the belt drive motor gradually decreases its speed to stop the original at the proper place on the exposure glass.
100 ms after the belt drive motor turns off, the feed-in motor turns on until the next original activates registration sensor-2 [E], the next original waits until the first original copy job is complete. This operation reduces the original feed in time.

When the scanner reaches the return position, the copier's CPU sends the feed-out and feed-in signals to the DJF CPU, and the feed-in motor is activated again to change the original.

If the original is smaller than A4 sideways, the original just copied is transported to the right side of the exposure glass then waits until the next original copy job is completed. Then the previous original is delivered. This operation also reduces the original feed-in time.

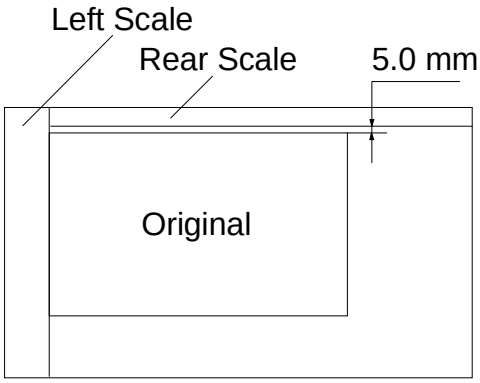

A610D513.wmf

Since the copier's original alignment position is at the left rear corner (not in the center), the originals fed from the DJF must also be at this position. But if the original was to be fed along the rear scale, original skews, jams or wrinkling, may occur.

To prevent such problems, the original transfer position is set to 5.0 mm away from the rear scale as shown. The correction for this 5.0 mm gap is compensated for by the base copier's optics unit.

8.2 THIN/THICK ORIGINAL MODES

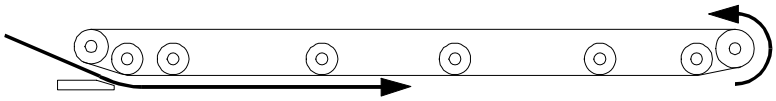

Fig. 1

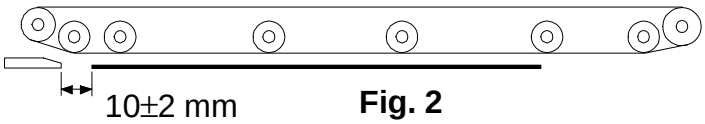

Fig. 2

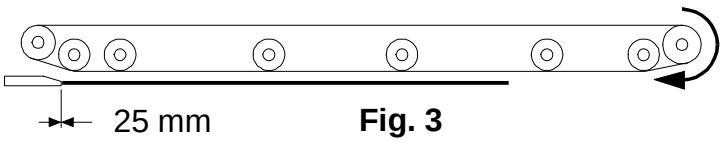

Fig. 3

A610D514.wmf

This document feeder has two different ways of stopping originals on the exposure glass at the correct position. They are thin original mode and thick original mode. The user can select the desired settings to match the type of original being used.

1. Thick Original Mode
   When thick original mode is selected, the belt drive motor remains energized to carry the original approximately 10 mm past the left scale (Figures 1 and 2). Then, the belt drive motor pauses and reverses to feed the original back against the original scale for about 25 mm (Fig. 3). This forces the original against the left scale and thus aligns the trailing edge of the original with the scale.
   Thick original mode is selected at the factory.

2. Thin Original Mode
   To protect originals from being damaged by the movements of the transfer belt, thin original mode can be selected. The original is stopped at the correct position on the exposure glass based on an encoder pulse count. The belt drive motor stops shortly after the original trailing edge passes registration sensor-2. (Exact timing depends on registration adjustment.)

The feed amount for both modes can be adjusted.
For more details, refer to the "Replacement and Adjustment" section.

9. ORIGINAL FEED-OUT MECHANISM

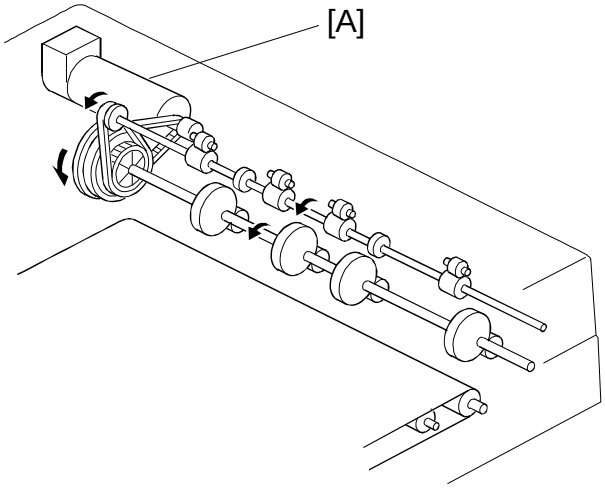

A610D516.wmf

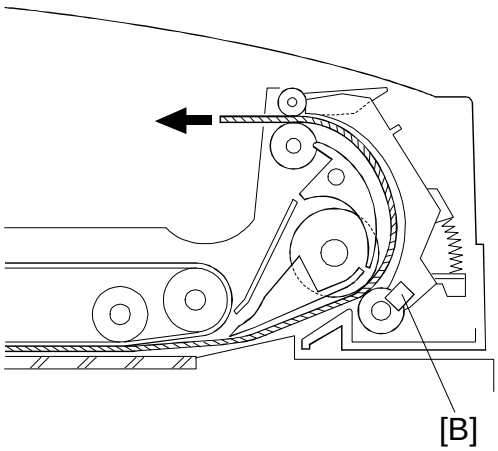

A610D515.wmf

When the scanner reaches the return position, the copier's CPU sends the feed-out signal to the DJF CPU.
When the DJF receives the feed-out signal, the belt drive and feed-out motors [A] turn on.

The feed-out sensor [B] installed in the feed-out section counts the number of pulses to calculate how long the feed-out motor must stay on to feed the original out of the machine properly. Also, the motor rotates at low speed for the last 50 mm of the detected trailing edge to improve stacking efficiency.

10. TRANSPORT BELT LEVELING MECHANISM

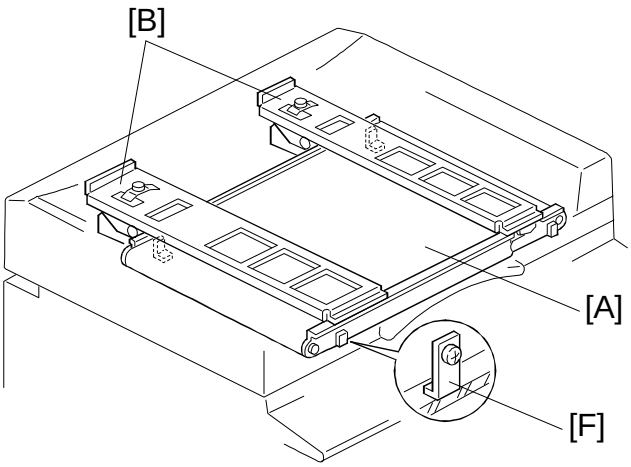

A610D525.wmf

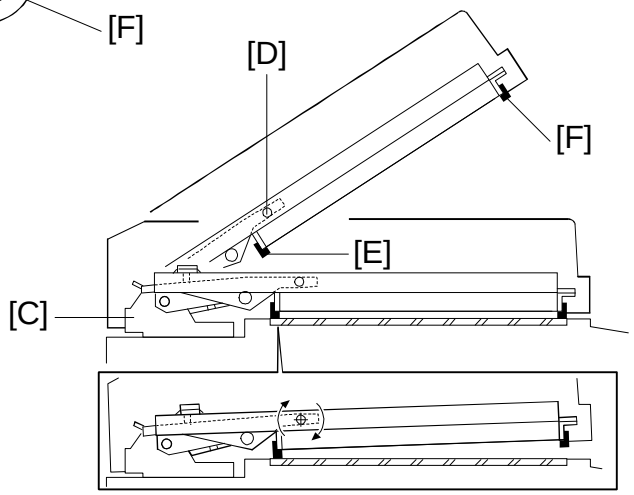

A610D526.wmf

The transport belt [A] and the two support arms [B] are formed as one unit, (made of aluminum). This results in a more flexible structure than the monocoque type (in which the cover carries all of the stress), and the gap between the transport belt and the original can easily be kept precise during belt transport.

On the support arm linked with the DJF hinge [C], there is a fulcrum [D] to support the DJF. When the DJF is being closed and the rear stopper [E] contacts the base copier first, the DJF rotates about the fulcrum, rotates and the front stopper [F] will also contact the base copier to level the belt with the exposure glass.

11. LIFT MECHANISM

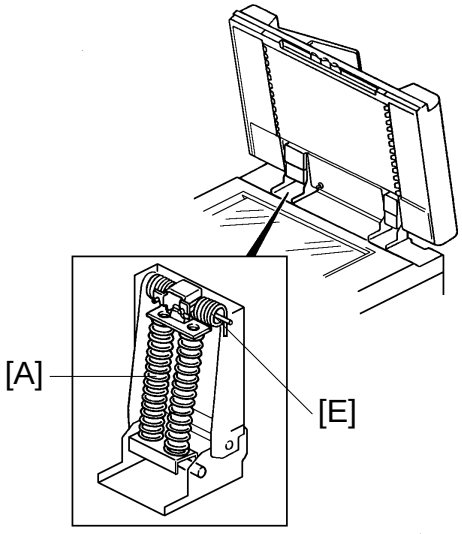

A610D527.img

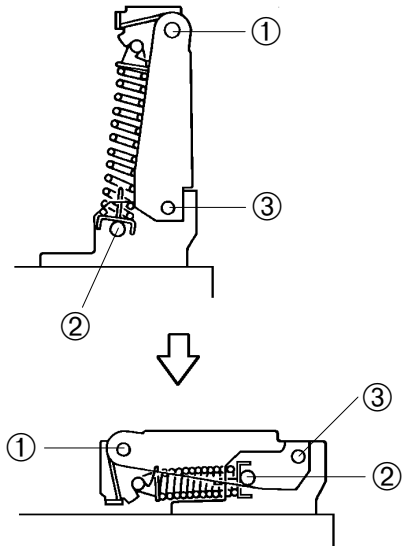

A610D528.img

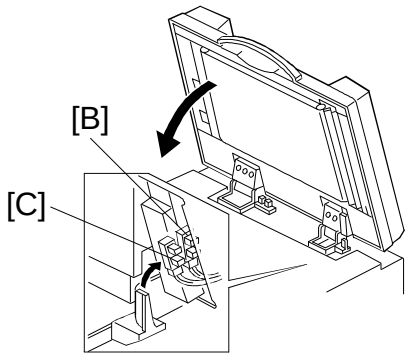

A610D533.wmf

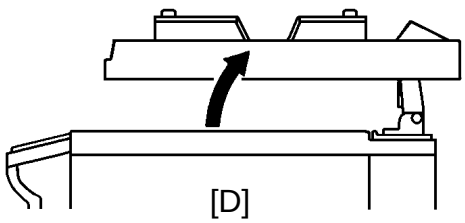

A610D529.img

When the DJF is opened, the lift springs [A] provide enough force to ensure that the DJF does not fall onto the exposure glass. When the DJF is closed, points "①", "②", and "③" are positioned as shown and no upward force is provided to the DJF.

The position sensor [B] is actuated when the DJF is closed. The copier then shifts to the document feeder mode. The position sensor also serves as the reset switch for DJF misfeeds.

After the cover is closed, the APS start sensor [C], which is below the DF position sensor, informs the base copier CPU that original size sensors in the main body can check the original size for the platen mode.

When a book or thick original (maximum thickness 60 mm) is copied, the DJF acts as a cover for the original as shown in the diagram [D]. The position sensor is turned off during this condition, so the DJF does not function. The tension of spring [E] returns the DJF to the normal condition after copying a thick original.

12. SPECIAL FEATURES

12.1 PRESET MODE

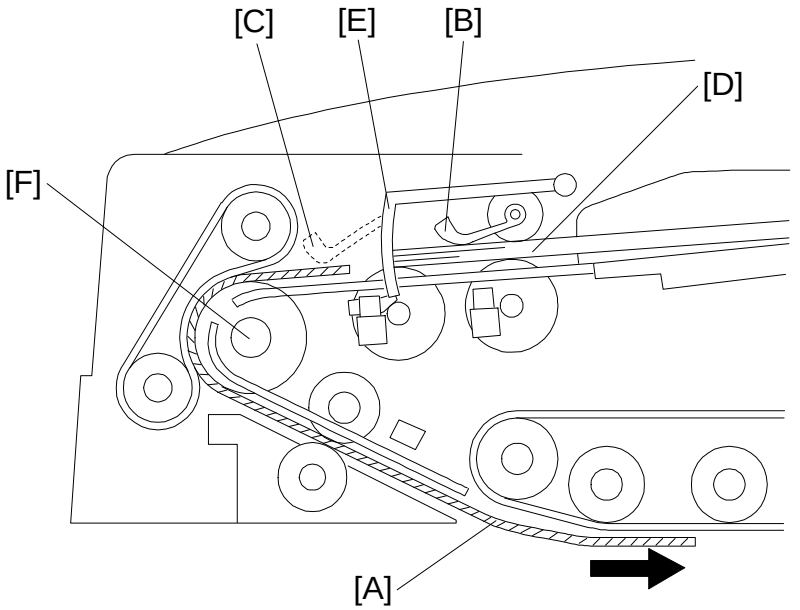

A610D510.wmf

Two sets of originals for independent copy jobs can be set on the original tray at the same time.

While the first set of originals [A] remains on the original tray, both the original set sensor feeler [B] and original feed sensor feeler [C] are lifted out of their sensors. A second set of originals [D] can be placed in the feeder on top of the first set, as far as the original stopper [E]. In this case, when the first set of originals are all fed-in, the original set sensor feeler is still lifted out of the sensor, but the original feed sensor has dropped into the sensor. Therefore, the copier's CPU recognizes that the first job is completed.

If the second job is already preset, the second set of originals is automatically fed to the feed roller [F] and fed one-by-one into the machine in the same manner as the first set of originals.

12.2 TWO-SIDED ORIGINAL FEED (AUTO REVERSE) MODE

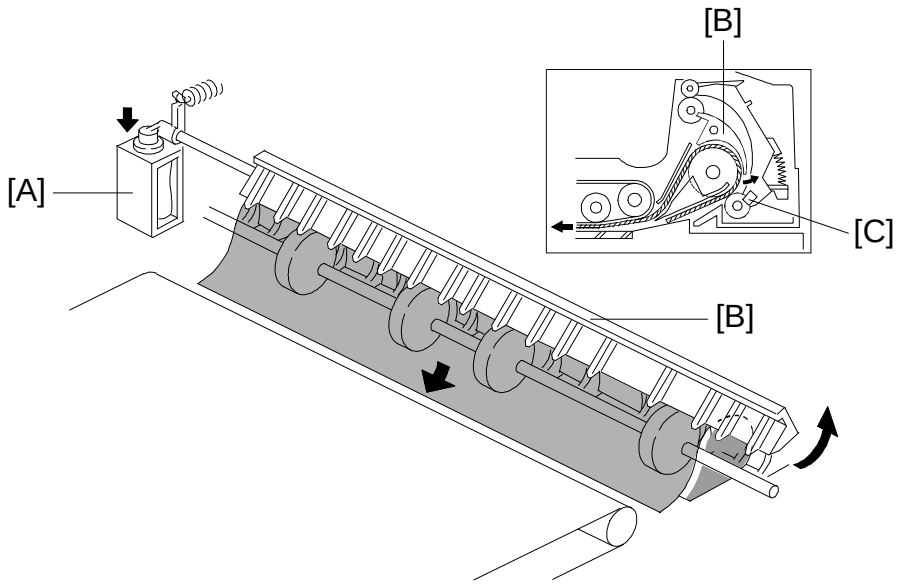

A610D517.wmf

Unlike for one-sided original feed, the back side of the original must be copied first to keep the originals and copies in the correct order.

During original feed-in, the sequence is the same as for one-sided feed; however, the belt drive motor continues rotating until the original reaches the inverter section. The DJF CPU also energizes the feed-out motor and the inverter solenoid [A] for a short time to lift the inverter pawls [B].

After the inverter mechanism inverts the original (10 pulses after the feed-out sensor [C] activates), the belt drive motor reverses and the original is fed towards the original scale. It is stopped at the correct position on the exposure glass, and the DJF CPU sends the copy start signal.

When the scanner reaches the return position, the copier's CPU sends the invert original signal to the DJF CPU in order to make a copy of the front side. The original is inverted in the same way as for the back side, as explained above.

12.3 COMBINE TWO ORIGINALS MODE

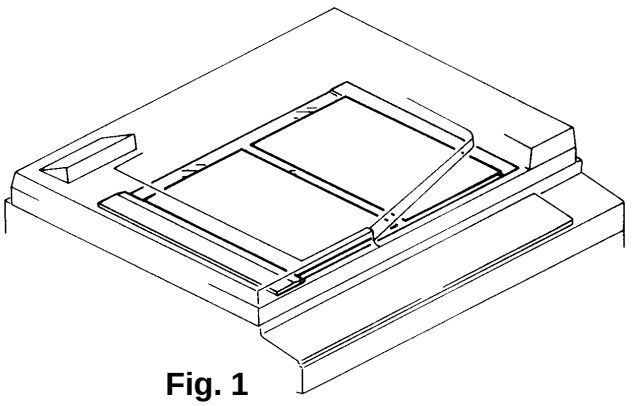

Fig. 1

A610D518.img

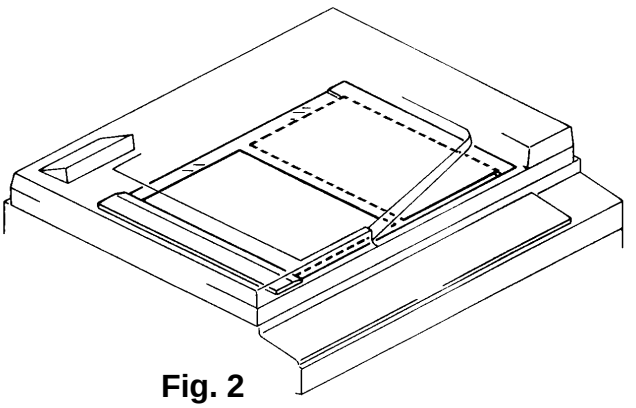

Fig. 2

A610D519.img

- Overview -

Two originals are fed onto the exposure glass at once in the combine two originals mode as shown in figure 1. This allows copying two originals onto one sheet of paper automatically either in the full size mode or in reduction mode.

If an odd number of originals is placed on the original table, the first original is placed on the exposure glass as shown in figure 2.

In this mode, only one-sided originals can be used, and Auto Paper Select (APS) and Auto Reduce/Enlarge modes cannot be used.

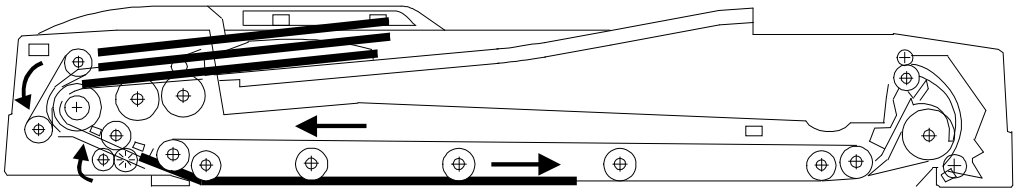

Figure 1

A610D520.wmf

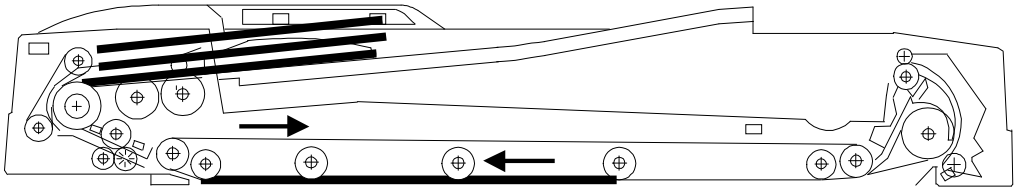

Figure 2

A610D521.wmf

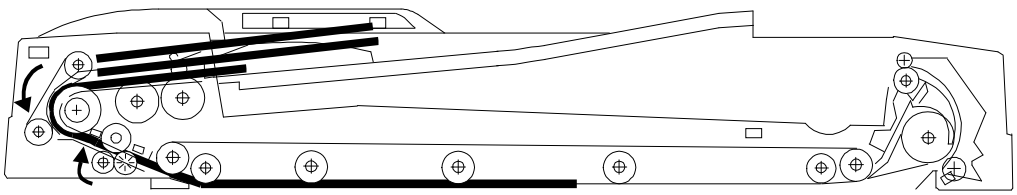

Figure 3

A610D522.wmf

- Operation -

The DF operates in the combine two originals mode as follows:

Figure 1

The first original is fed in the same manner as in one-sided original mode. When registration sensor-2 detects the trailing edge of the first original, the feed-in and the belt drive motors stop once and the feed-in clutch turns on again to prepare to feed in the second original.

Figure 2

As soon as the feed-in and the belt drive motor turn off, the belt drive motor starts rotating in reverse to align the first original against the original scale. Then the belt drive motor turns off.

Figure 3

50 ms after the feed-in motor turns off, the feed-in motor turns on again at a lower speed (372 mm/) to feed the second original.

A few pulses (0 ~ 14 pulses: depending on the settings of DIP switches 102-1 to 4) after the registration sensor-2 is activated by the leading edge of the second original, the feed-in motor and the feed-in clutch turn off.

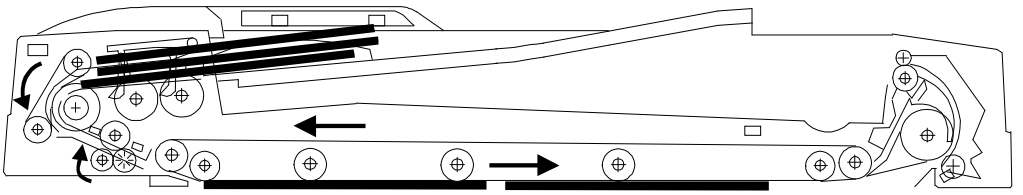

Figure 4

A610D523.wmf

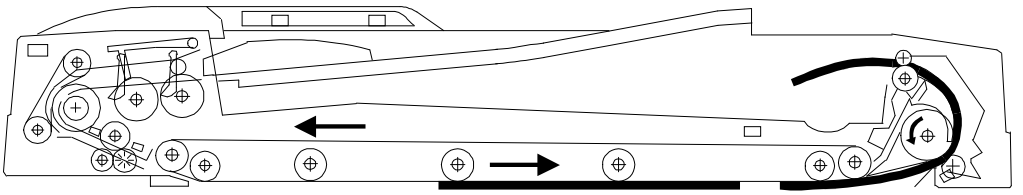

Figure 5

A610D524.wmf

Figure 4

Soon after the feed-in motor turns off, both the feed-in and the belt drive motors turn on again at the lower speed (372 mm/s).

After registration sensor-2 detects the trailing edge of the second original, the feed-in and the belt drive motors turn off and gradually the belt drive speed reduces to stop the original at the proper place on the exposure glass.

Figure 5

After these originals have been copied, the belt drive motor and the feed-out motor turn on to feed out the originals. 50 mm before the trailing edge of the first original de-activates the feed-out sensor, both the belt drive and the feed-out motor rotate at the lower speed to improve original stacking.

48 pulses later, the belt drive motor turns off and 60 pulses after the feed-out sensor detects the trailing edge of the second original, the feed-out motor turns off.

13. TIMING CHARTS WITH ORIGINAL MISFEED DETECTION

13.1 A4 SIDEWAYS: ONE-SIDED, TWO ORIGINALS

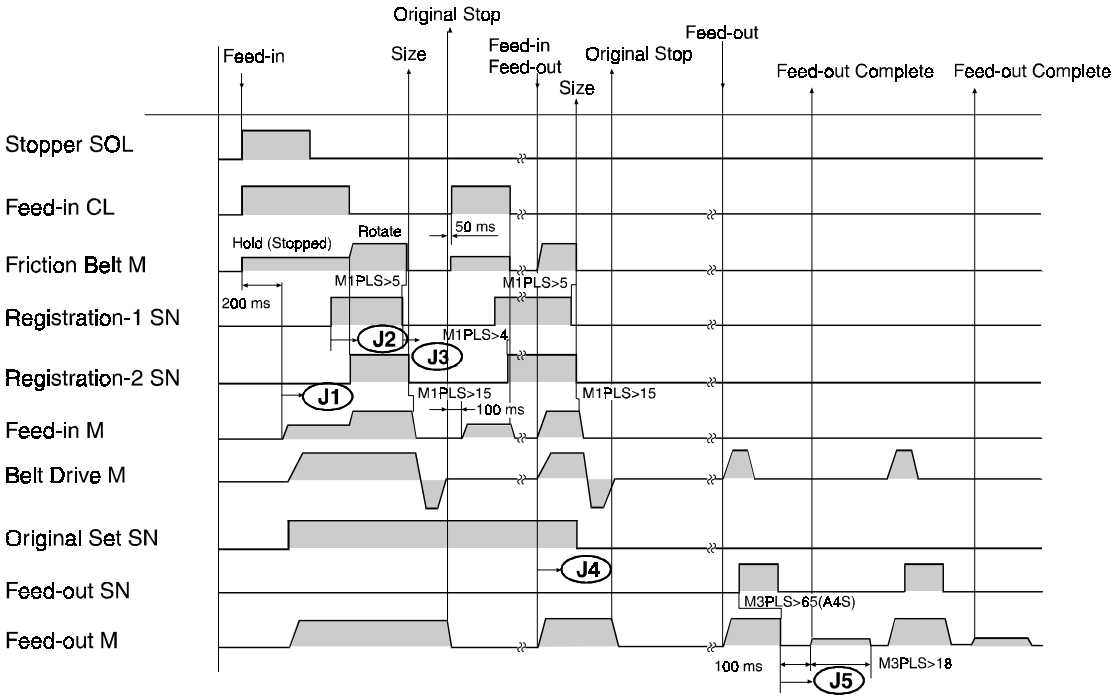

(J1) : Registration-1 sensor does not activate within 150 pulses after the feed-in motor starts turning.

(J2) : Registration-1 sensor does not de-activate within 200 pulses.

(J3) : The current paper size data is 40 mm longer or 80 mm shorter than the previous original size data (this check is disabled in the mixed size original mode).

(J4) : Feed-out sensor does not activate within 125 pulses after the feed-out motor starts turning.

(J5) : Feed-out sensor does not de-activate within 30 pulses after the feed out motor starts turning.

A610D530.wmf

13.2 COMBINE TWO ORIGINALS MODE

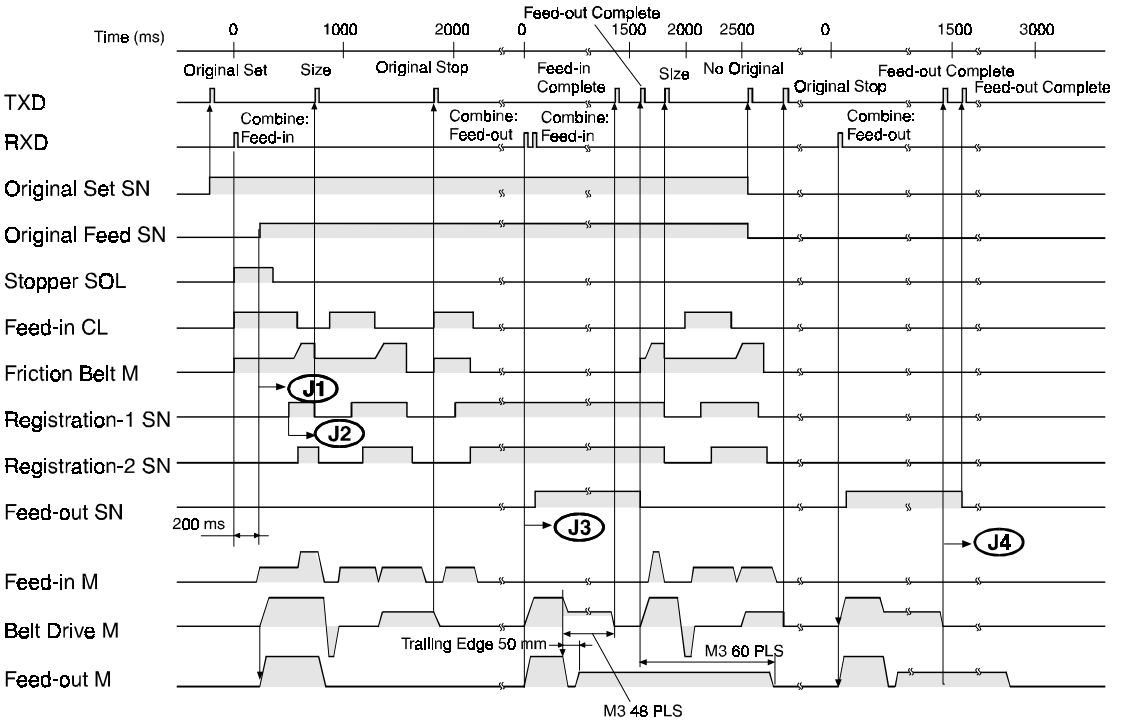

J1 : Registration-1 sensor does not activate within 150 pulses after the feed-in motor starts turning.

J2 : Registration-1 sensor does not de-activate within 200 pulses.

J3 : Feed-out sensor does not activate within 125 pulses after the feed-out motor starts turning.

J4 : Feed-out sensor does not de-activate within 150 pulses after the feed-out motor starts turning.

A610D531.wmf

13.3 A4 SIDEWAYS: TWO-SIDED, TWO ORIGINALS

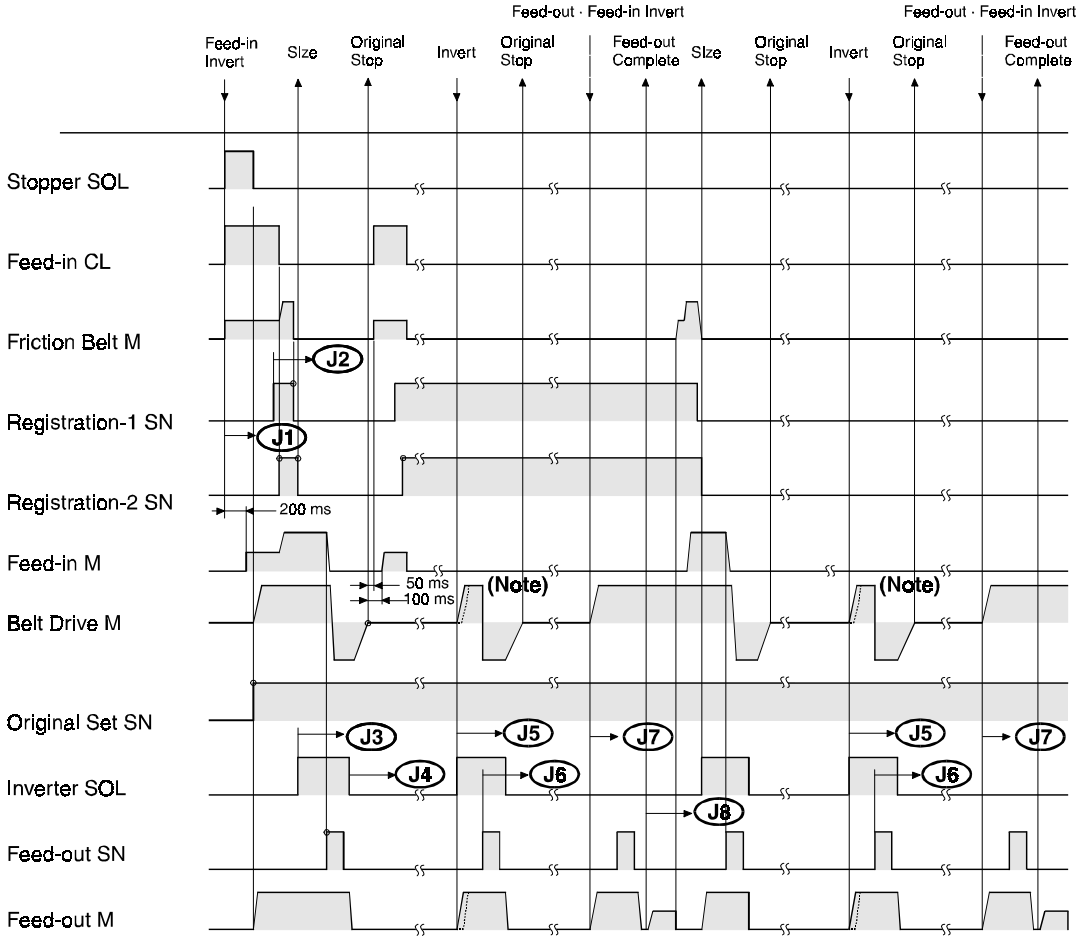

J1 : Registration-1 sensor does not activate within 150 pulses after the feed-in motor starts turning.

J2 : Registration-1 sensor does not de-activate within 200 pulses.

J3 : Feed-out sensor does not activate within 130 pulses after the feed-out motor start turning.

J4 : Feed-out sensor does not de-activate within 200 pulses.

J5 : Feed-out sensor does not activate within 130 pulses after the feed-out motor start turning.

J6 : Feed-out sensor does not de-activate within 200 pulses after the feed-out motor starts turning.

J7 : Feed-out sensor does not activate within 125 pulses after the feed-out motor starts turning.

J8 : Feed-out sensor does not de-activate within 30 pulses after the feed-out motor starts turning.

Note: Motor ON timing will be delayed for 50 ms when an A3/DTL original is fed.

A610D532.wmf

14. SERVICE TABLES

14.1 DIP SWITCHES AND SWITCH

0: OFF 1: ON ↓: Push

Modes	DPS101				DPS102				SW	Function
	1	2	3	4	1	2	3	4	101	
Motor Tests (Speed Adj.)	1	1	0	1	1	0	0	0	—	Feed-in motor (M2) activates (High Speed)
					1	0	0	1	—	Feed-in motor (M2) activates (Low Speed)
					0	1	0	0	—	Belt drive motor (M3) activates
					0	0	1	0	—	Feed-out motor (M4) activates (High Speed)
					0	0	1	1	—	Feed-out motor (M4) activates (Low Speed)
Friction Belt Free Run	1	1	1	0	1	0	0	0	↓	Friction belt motor (M1) activates (Reverse)
					1	0	0	1	↓	Friction belt motor (M1) activates (Forward)
					1	0	0	—	↓	Push SW101 to feed the page in. Push it again to feed the sheet out.
MC, SOL Tests	0	0	1	1	1	0	0	0	—	Stopper solenoid (SOL2) activates
					0	1	0	0	—	Not used
					0	0	1	0	—	Feed-in clutch (CL1) activates
					0	0	0	1	—	Inverter solenoid (SOL1) activates
Original Feed Tests	0	1	0	1	0	0	0	0	↓	Feeds the original in and out (thick / one-sided)
					0	0	0	1	↓	Feeds the original in and out (thin / one-sided)
					1	0	0	0	↓	Feeds the original in and out (thick / two-sided)
					1	0	0	1	↓	Feeds the original in and out (thin / two-sided)
					0	0	1	0	↓	Feeds the original in and out (low speed / thick / one-sided)
					0	0	1	1	↓	Feeds the original in and out (low speed / thin / one-sided)
					1	0	1	0	↓	Feeds the original in and out (low speed / thick / two-sided)
					1	0	1	1	↓	Feeds the original in and out (low speed / thin / two-sided)
					0	1	0	0	↓	Feeds the original in and out (pasted original mode)
					1	1	1	0	↓	Feeds the original in and out (combine original mode)

Modes	DPS101				DPS102				SW	Function
	1	2	3	4	1	2	3	4	101	
Free Run Mode	1	0	0	1	0	0	0	0	↓	Thick / one-sided original mode
					0	0	0	1	↓	Thin / one-sided original mode
					1	0	0	0	↓	Thick / two-sided original mode
					1	0	0	1	↓	Thin / two-sided original mode
					0	1	0	0	↓	Thick / mixed size original mode
					0	1	0	1	↓	Thin / mixed size original mode
					0	0	1	0	↓	Low speed / thick / one-sided
					0	0	1	1	↓	Low speed / thin / one-sided
					1	0	1	0	↓	Low speed / thick / two-sided
					1	0	1	1	↓	Low speed / thin / two-sided
					1	1	1	0	↓	Combine two originals mode
LED	1	1	1	1	0	0	0	0	—	Turns on the indicator lamp (L1)
Standard Operation	1	0	0	0	0	0	0	0	—	Standard setting for A172/A199
	0	0	0	0	0	0	0	0	—	Standard setting for A175/A176/ A177/A191/A192

14.2 VARIABLE RESISTORS

VR No.	FUNCTION
101	Adjusts the registration in one-sided original mode
102	Adjusts the registration in two-sided original mode
103	Adjusts the feed-in motor (M2) speed (high speed)
104	Adjusts the feed-in motor (M2) speed (low speed)
105	Adjusts the belt drive motor (M3) speed
106	Adjusts the feed-out motor (M4) speed (low speed)
107	Adjusts the feed-out motor (M4) speed (high speed)

14.3 LEDs

These LEDs monitor motor speed. Use in conjunction with VRs 103 - 107.

LED 101	LED 102	FUNCTION
ON	ON	Correct speed, if they stay on for more than 10 s
ON	OFF	The motor is too fast
OFF	ON	The motor is too slow

14.4 FUSE

Fuse No.	FUNCTION
101	Protects all voltage lines (5 V, 12 V, 24 V)

15. REPLACEMENTS AND ADJUSTMENTS

15.1 UPPER COVER REMOVAL

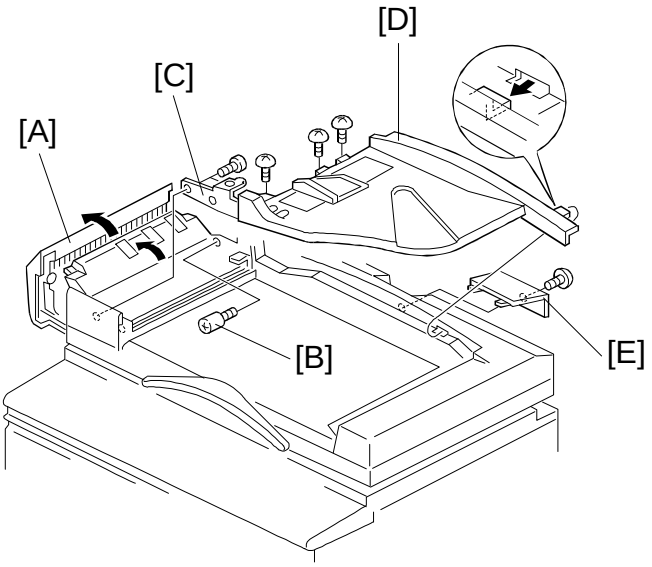

A610R500.wmf

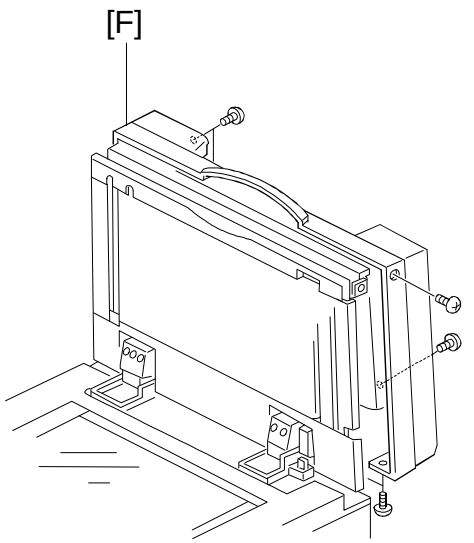

A610R501.wmf

1. Turn off the main switch and open the feed-in cover [A].
2. Remove the stopper screw [B].
3. Remove the 2 screws securing the table bracket [C].
4. Remove the original table [D] (3 screws).

   NOTE: Do not loosen the 2 screws securing the original table to the table bracket.
5. Remove the small cover [E] at the rear side of the upper DJF cover (1 screw).
6. Remove the upper cover [F] (6 screws).

15.2 TRANSPORT BELT REPLACEMENT

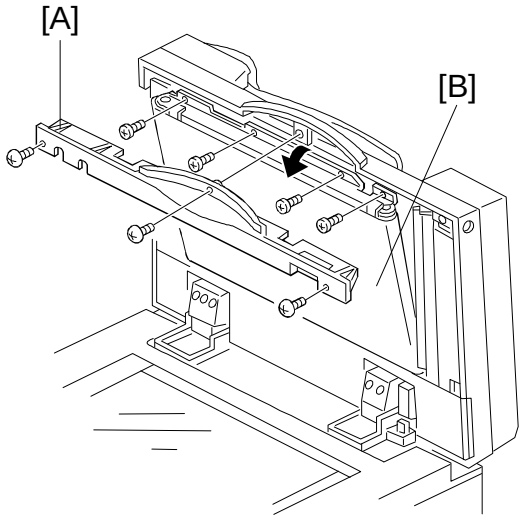

A610R502.wmf

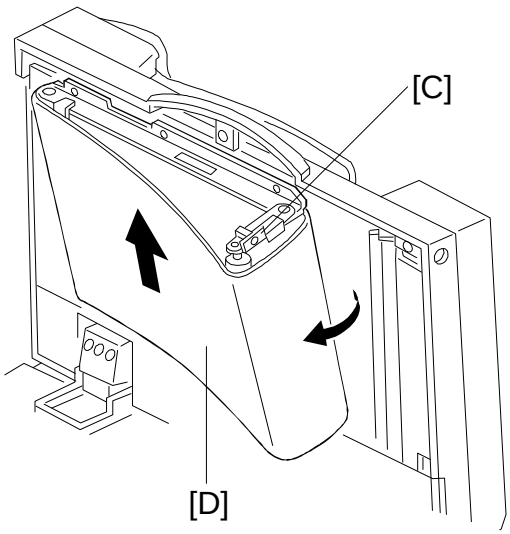

A610R503.wmf

NOTE: Never use alcohol to clean the transport belt. The coating will be damaged.

1. Turn off the main switch and lift up the DJF.
2. Remove the front cover [A] (3 screws).
3. Remove the 4 screws securing the transport belt guide assembly [B].
4. Fold the stay [C] as shown.
5. Remove the transport belt [D].

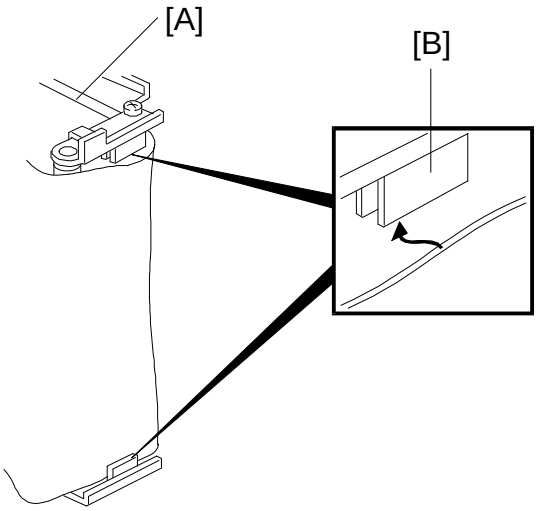

A610R504.wmf

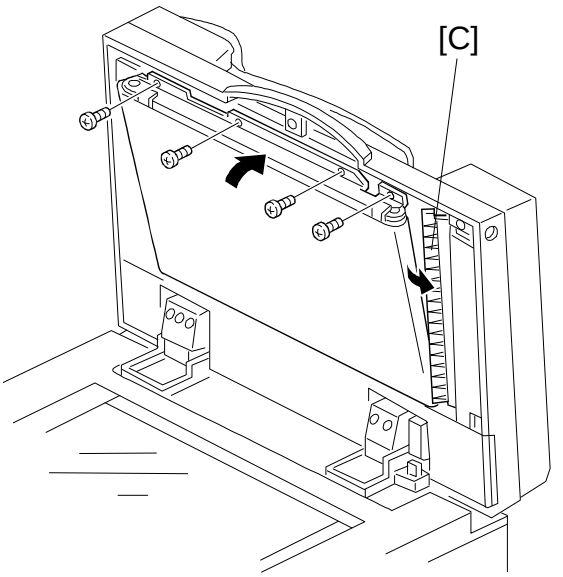

A610R505.wmf

6. Install the new belt on the belt guide assembly [A].

   NOTE: When installing the new belt, set the belt between the belt guides [B].

7. While opening the original guide [C], carefully install the belt guide assembly on the DJF (4 screws), making sure that the mylars on the feed-in unit side are not damaged.

8. Reinstall the machine and check the machine operation.

15.3 FEED ROLLER REPLACEMENT

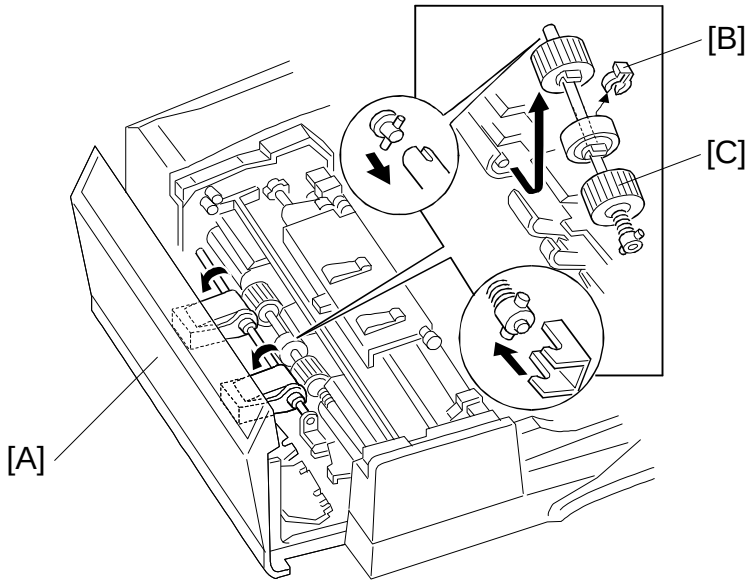

A610R506.wmf

1. Turn off the main switch and open the feed cover [A].
2. Remove the snap ring [B].
3. Push the feed roller shaft to the front, then remove the roller assembly [C] as shown.
4. Remove the 4 snap rings, then replace the feed rollers.

NOTE: When reinstalling the feed rollers, be sure that the one-way bearing (silver color) is located at the front side (the roller must rotate only counter-clockwise when the shaft is fixed).

Do not touch the rollers with bare hands.

15.4 FRICTION BELT REPLACEMENT

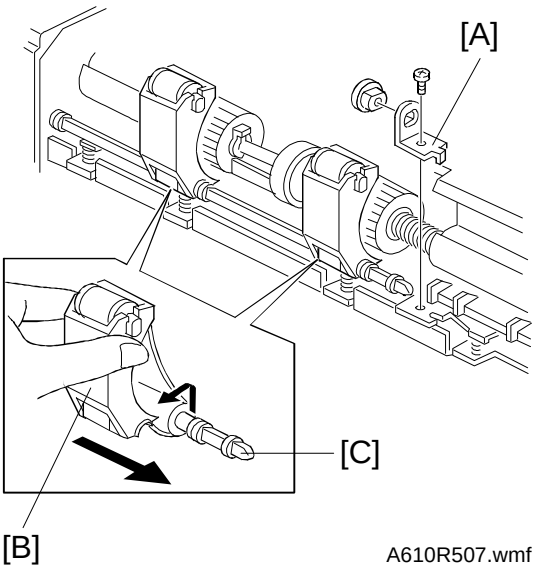

A610R507.wmf

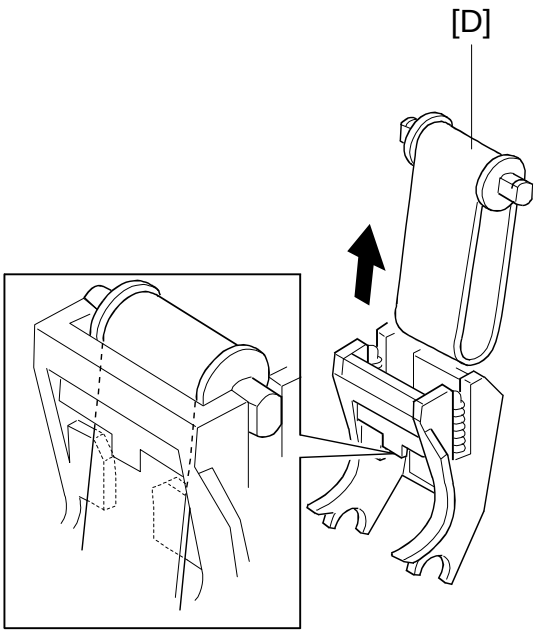

A610R508.wmf

1. Turn off the main switch and open the feed cover.
2. Remove the shaft receiving bracket [A] (1 screw).
3. Gently pull up the friction belt assembly [B] and remove it from the drive shaft [C].
4. Replace the friction belts [D].

NOTE: Use alcohol to clean the friction belts.
Do not touch the belts with bare hands.

15.5 ORIGINAL SET/FEED, REGISTRATION-1/-2, AND ORIGINAL WIDTH-1/-2/-3 SENSOR REPLACEMENT

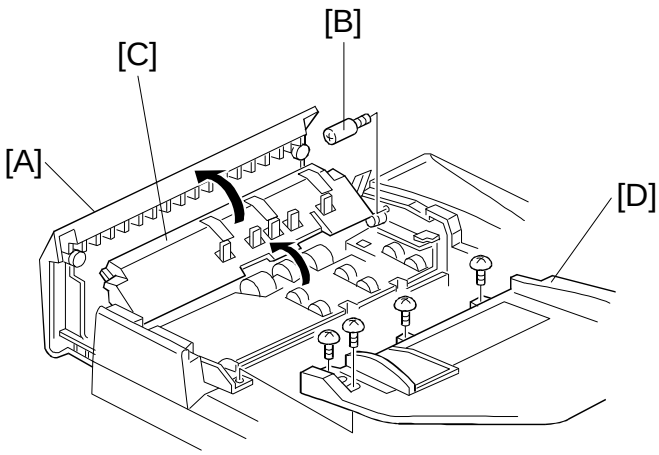

A610R509.wmf

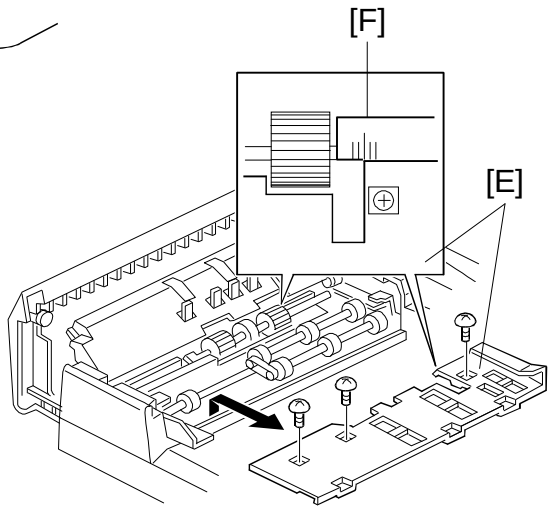

A610R510.wmf

1. Turn off the main switch and open the feed cover [A].
2. Remove the stopper screw [B] and open the original stopper [C].
3. Remove the original table [D] (5 screws).
4. Remember the location of the original guide [E] against the guide plate [F] as shown. This is to keep the same original side-to-side registration after re-installation.
5. Remove the original guide (3 screws).
6. Replace the required sensor.
7. After this replacement, adjust the side-to side original registration if necessary.

15.6 FEED-OUT UNIT REMOVAL

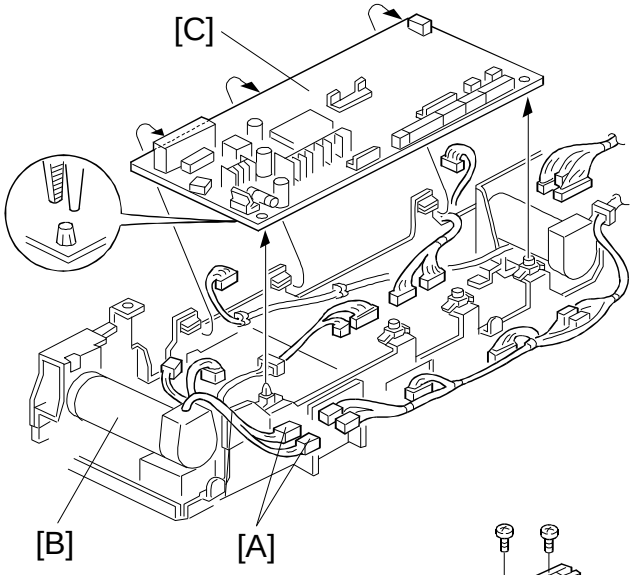

A610R526.wmf

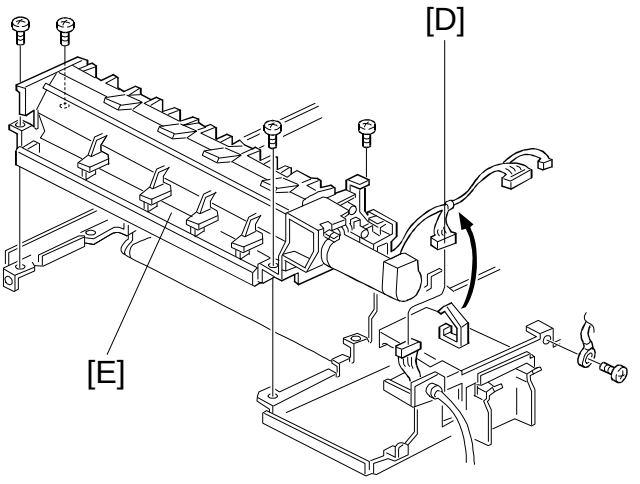

A610R527.wmf

1. Turn off the main switch and remove the upper cover. (Refer to Upper Cover Removal)
2. Disconnect the 4P and 2P connectors [A] of the feed-out motor [B].
3. Disconnect all the connectors and remove the DJF main board [C].
4. Disconnect the APS start/DJF position sensor connector [D].
5. Remove the feed-out unit [E] (4 screws and 1 grounding screw).

15.7 FEED-OUT MOTOR REPLACEMENT

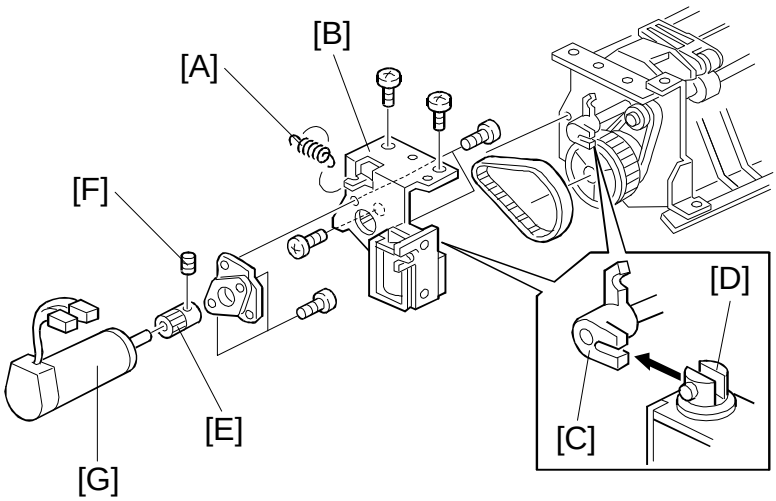

A610R528.wmf

1. Remove the feed-out unit. (Refer to Feed-out Unit Removal.)
2. Remove the spring [A].
3. Remove the bracket [B] with the feed-out motor from the feed-out unit (3 screws).

   NOTE: When reinstalling the bracket, be sure to set the arm [C] on the plunger pin [D].
4. Remove the pulley [E] (1 Allen screw [F]).
5. Remove the feed-out motor [G] (4 screws).

15.8 INVERTER SOLENOID REMOVAL AND ADJUSTMENT

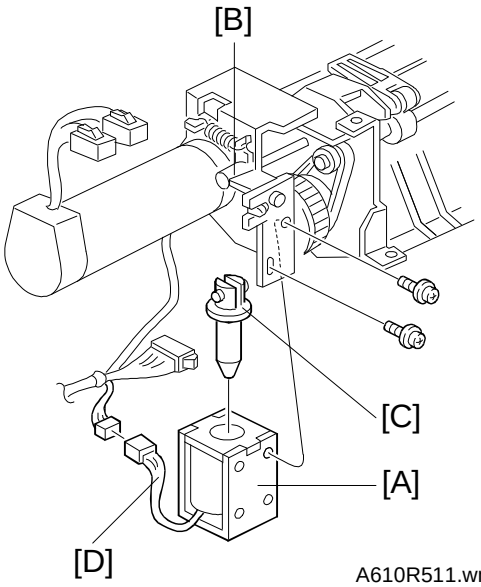

A610R511.wmf

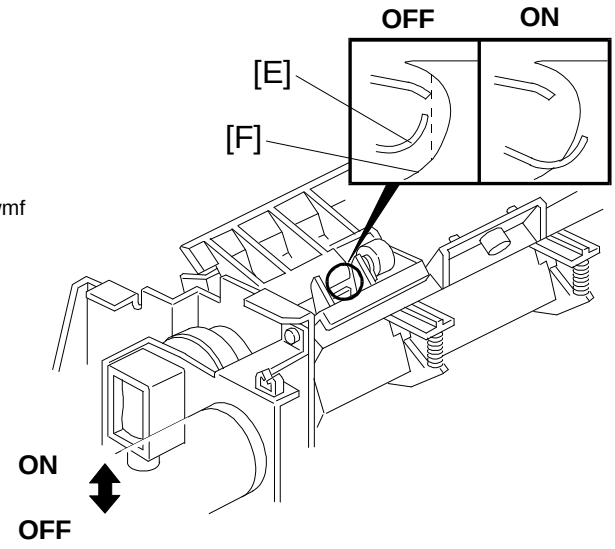

A610R512.wmf

1. Remove the feed-out unit. (Refer to Feed-out Unit Removal.)
2. Remove the inverter solenoid [A] (2 screws).

NOTE: When installing the inverter solenoid, check the following:

1) The arm [B] must be set on the plunger pin [C].
2) The inverter solenoid connector harness [D] should be facing the outside of the unit as shown.
3) Manually push the plunger and check that it works smoothly.
4) When the inverter solenoid does not activate (OFF), the inverter guide [E] must be inside the outer inverter guide [F], and when the inverter solenoid activates (ON), the inverter guide must be outside the outer inverter guide, as shown.

15.9 FEED-OUT SENSOR REPLACEMENT

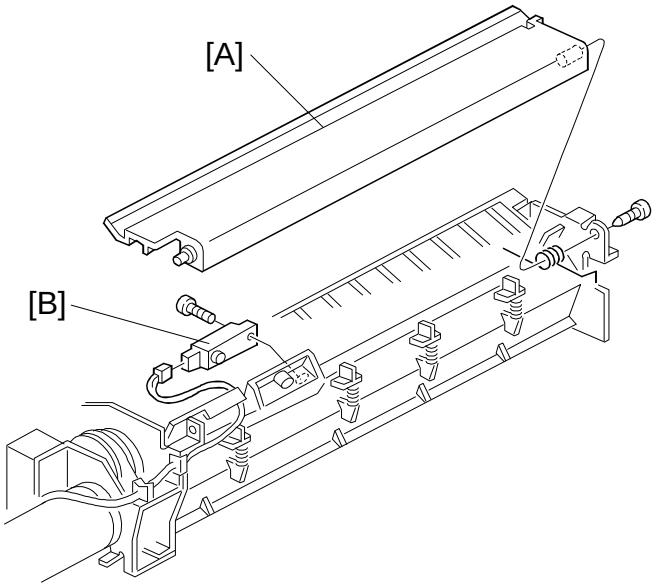

A610R513.wmf

1. Turn off the main switch and remove the feed-out unit. (Refer to Feed-out Unit Removal.)
2. Remove the right cover [A] (1 screw).
3. Replace the feed-out sensor [B] (1 screw and 1 connector).

15.10 INVERTER ROLLER REPLACEMENT

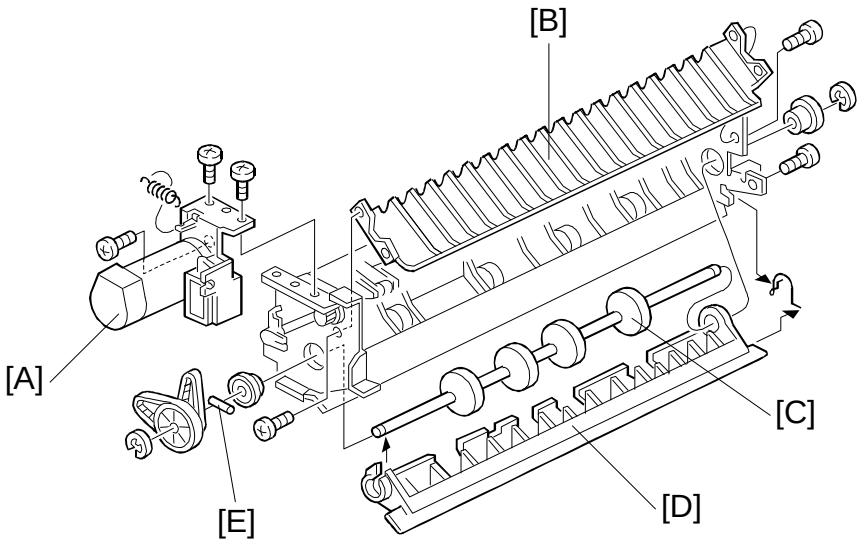

A610R514.wmf

1. Turn off the main switch and remove the feed-out unit. (Refer to Feed-out Unit Removal.)
2. Remove the feed-out motor [A]. (Refer to Feed-out Motor Removal.)
3. Remove the exit guide [B] (3 screws).
4. Remove the inverter roller [C] with the inverter guide [D] (2 E-rings, 1 pulley, 1 pin [E], and 2 bushings).
5. Replace the inverter roller.

15.11 DF POSITION/APS START SENSOR REPLACEMENT

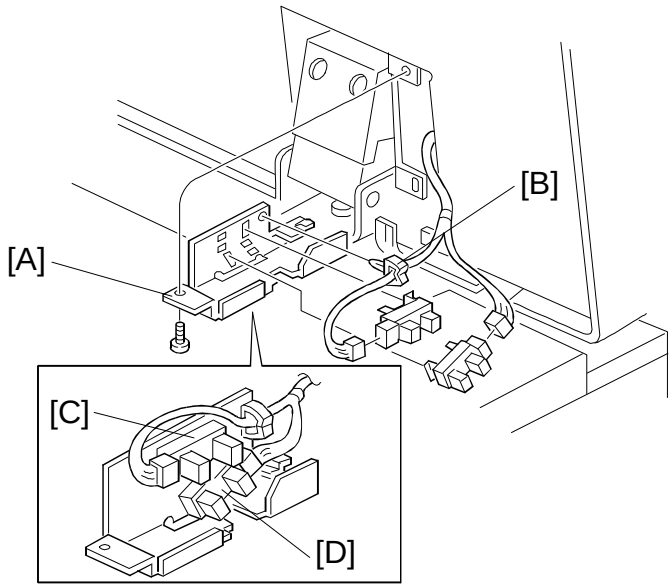

A610R515.wmf

1. Turn off the main switch and lift up the DF.
2. Remove the sensor bracket [A] (1 screw).
3. Remove the harness clamp [B] and replace the DF position sensor [C] or the APS start sensor [D] (1 connector each).

15.12 BELT DRIVE MOTOR REPLACEMENT

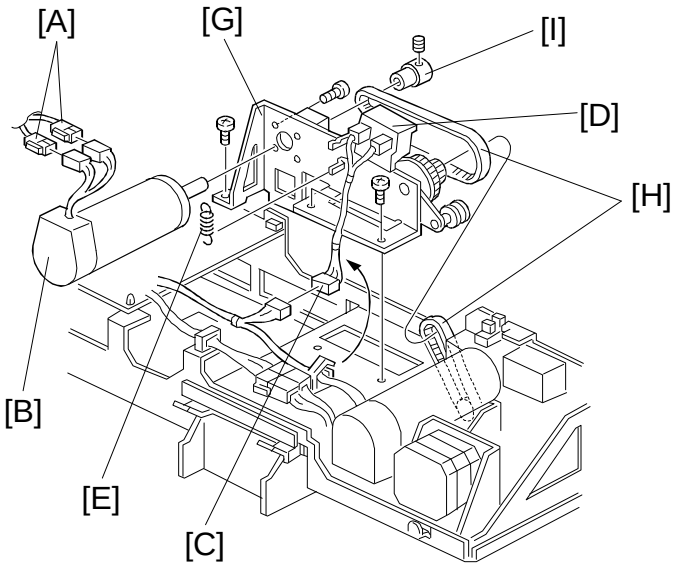

A610R516.wmf

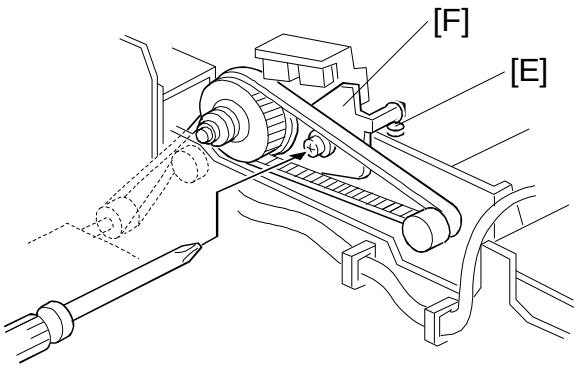

A610R517.wmf

1. Turn off the main switch and remove the upper cover. (Refer to Upper Cover Removal.)
2. Disconnect the 2 connectors [A] of the belt drive motor [B].
3. Disconnect the connector [C] of the indicator panel [D] as shown.
4. Remove the tension spring [E] and loosen the tension bracket [F] as shown.
5. Remove the belt drive motor bracket [G] (3 screws), making sure not to damage the 2 timing belts [H].
6. Remove the drive pulley [I] (1 Allen screw) then replace the belt drive motor (4 screws).

15.13 FEED-IN UNIT REMOVAL

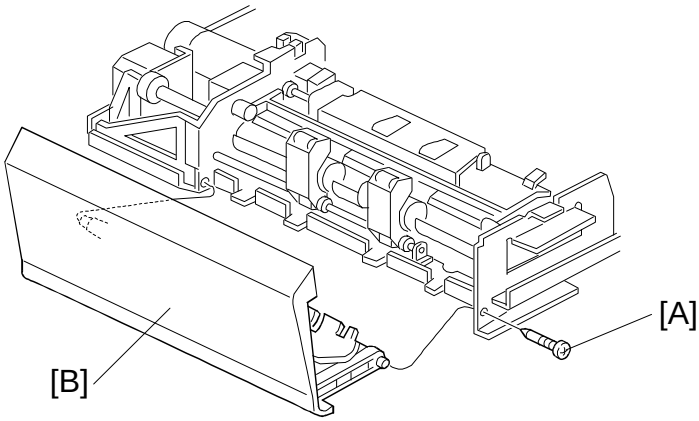

A610R518.wmf

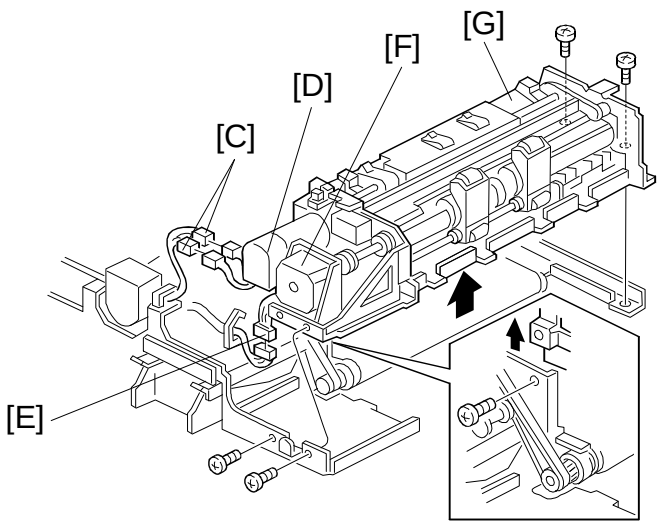

A610R519.wmf

1. Turn off the main switch and remove the upper cover. (Refer to Upper Cover Removal.)
2. Remove the screw [A], then remove the feed cover [B].
3. Disconnect the 2 connectors [C] of the feed-in motor [D].
4. Disconnect the connector [E] of the friction belt motor [F].
5. Disconnect CN104, 105, 108, 109, 110, and 111 on the DJF main board.
6. Disconnect the connector of the indicator panel as well.
7. Remove the feed-in unit [G] (5 screws).

15.14 FEED-IN MOTOR REPLACEMENT

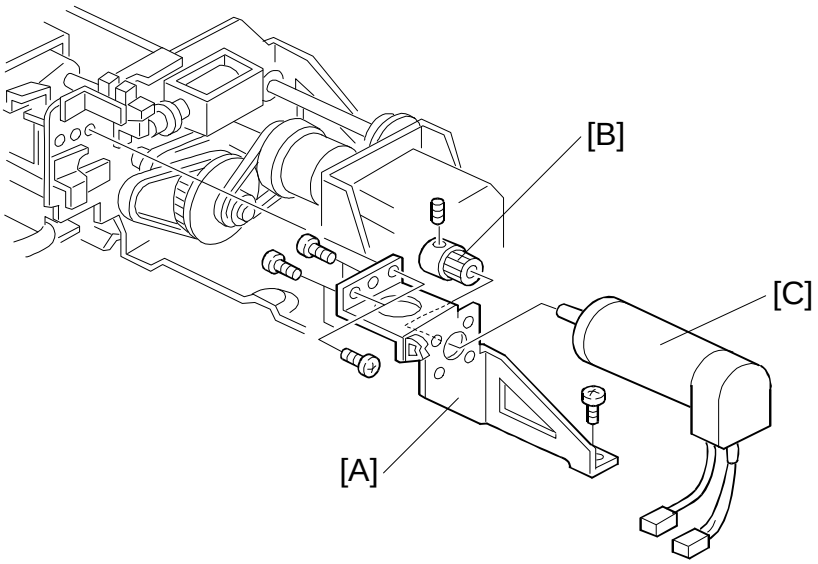

A610R520.wmf

1. Turn off the main switch and remove the upper cover. (Refer to Upper Cover Removal.)
2. Remove the feed-in motor bracket [A] (3 screws), making sure not to damage the timing belt.
3. Remove the drive pulley [B] (1 Allen screw), then replace the feed-in motor [C] (4 screws).

15.15 FRICTION BELT MOTOR REPLACEMENT

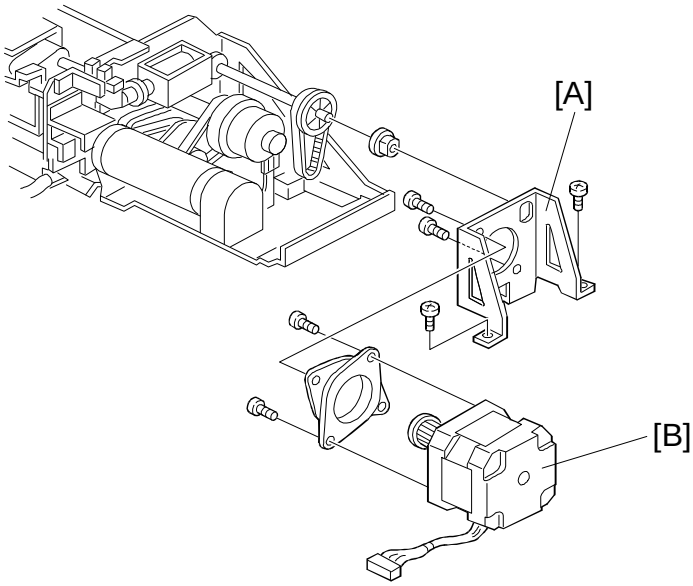

A610R521.wmf

1. Turn off the main switch and remove the upper cover. (Refer to Upper Cover Removal.)
2. Remove the friction belt motor bracket [A] (2 screws), making sure not to damage the timing belt.
3. Replace the friction belt motor [B] (4 screws).

15.16 FEED-IN CLUTCH REPLACEMENT

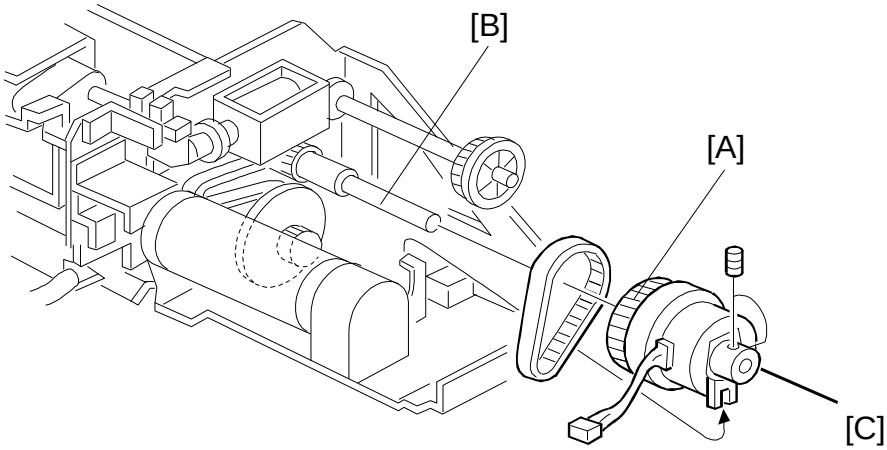

A610R522.wmf

1. Turn off the main switch and remove the upper cover. (Refer to Upper Cover Removal.)
2. Remove the friction belt motor. (Refer to Friction Belt Motor Replacement.)
3. Replace the feed-in clutch [A] (2 Allen screws).

NOTE: When reinstalling, make sure of the following.

1) The clutch stopper groove must engage the clutch stopper.
2) The end of the clutch stopper [C] must be flush with the head of the shaft.

15.17 STOPPER SOLENOID REPLACEMENT

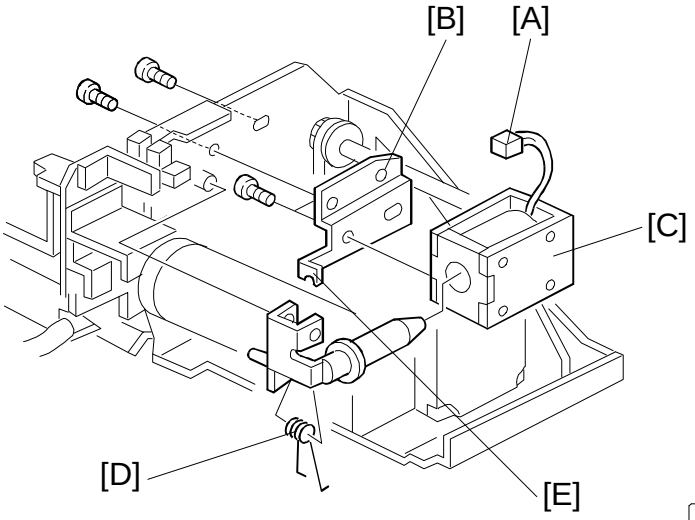

A610R523.wmf

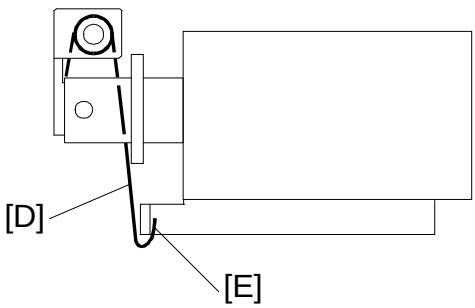

A610R533.wmf

1. Turn off the main switch and remove the upper cover. (Refer to Upper Cover Removal.)
2. Disconnect the connector [A] of the stopper solenoid.
3. Open the feed-in cover and the original stopper.
4. Remove the bracket [B] with the stopper solenoid (2 screws and 1 E-ring.)
5. Remove the stopper solenoid [C] (2 screws).

NOTE: When installing the stopper solenoid, pay attention to the following points:

1) The spring [D] must be correctly hooked onto the stopper [E], as shown.
2) Manually pull the stopper solenoid plunger to confirm that the press rollers firmly contact the pick-up rollers. When the pick-up rollers are manually rotated, the press rollers also rotate. If not, adjust the stopper solenoid position.

15.18 VERTICAL REGISTRATION ADJUSTMENT

15.18.1 One-sided Thin Original Mode

Perform this adjustment for machines having problems using the Thick Original Mode as well.
The original stopping position in thick original mode depends on the setting of this adjustment. (For details, refer to Detailed Descriptions.)

NOTE: 1) After replacing the DJF main board, always perform the adjustment using VR101 on the DJF main board.

2) At other times, adjust with either the base copier SP mode or VR101. Both procedures will move the original stopping position.

3) After finishing the adjustment, be sure to turn off the dip switches.

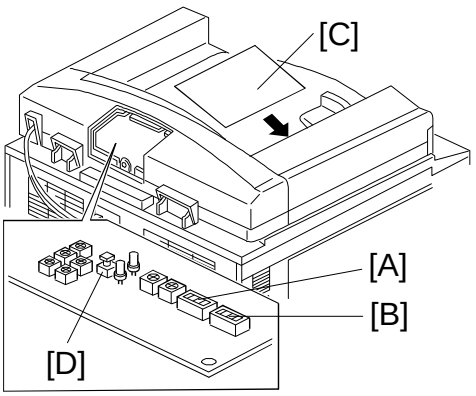

A610R524.wmf

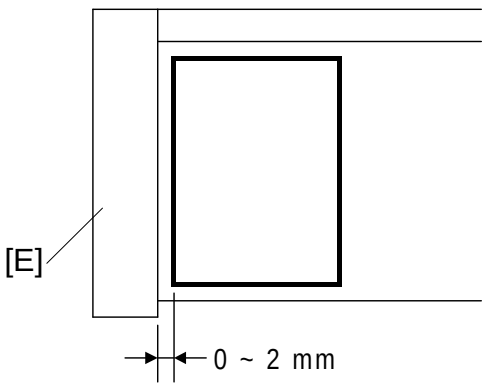

A610R525.wmf

– Using VR101 –

1. Remove the small cover at the rear of the DJF upper cover (1 screw).
2. Turn on dip switch 101-2 and -4 [A].
3. Turn on dip switch 102-4 [B].
4. Place a sheet of A4/8$^{1/2}$" x 11" sideways paper [C] (64 g/m^2, 17 lb) on the original table.
5. Press switch 101 [D]. (Paper will be fed to the exposure glass.)
6. Raise the DJF carefully so that the original does not move.
7. Check that the gap between the trailing edge of paper and the left original scale [E] is 0 ± 2.0 mm.
8. If the gap is not within this specification, adjust registration with VR101. (Looking from the front, turning VR101 counter-clockwise will decrease the gap.)
9. Return the user settings to their defaullts, if you have changed any.

– Using The Copier SP Mode –

NOTE: 1) When performing this adjustment, always make test copies with the "Copy In SP" mode. If you do not, the adjustment will not be performed properly.

2) Make sure that the DJF dip switches are returned to the standard setting of the base copier, if you have performed the adjustments using the DJF main board.

3) Make sure that the "Thin Mode" is selected with the customer settings of the base copier.

1. Turn the copier main switch off and on to initialize the machine.
2. Enter the copier SP mode, and open the DJF Registration Adjustment page.
3. Place a sheet of A4/8 1/2" x 11" sideways paper (64 g/m^2, 17 lb) on the original table, and press the Copy In SP key.
   To save toner, select BLACK and A4, then press the Start key.
4. After the original stops on the exposure glass, raise the DJF carefully so that the original does not move.
5. Check that the gap between the trailing edge of paper and the left original scale is 0 ± 2.0 mm.
6. If the gap is not within this specification, adjust registration by pressing the ⊞ and ⊟ keys of the thin mode inside the SP mode. The original paper stopping position will change accordingly. (If you press ⊟ , the gap will decrease.)
7. Return the user settings to their defaults, if you have changed any.

15.18.2 Two-sided Original Mode

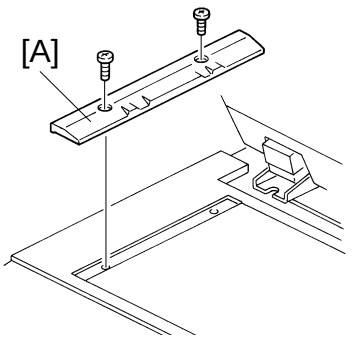

A610R530.img

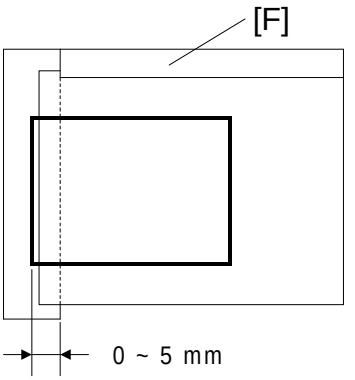

A610R529.wmf

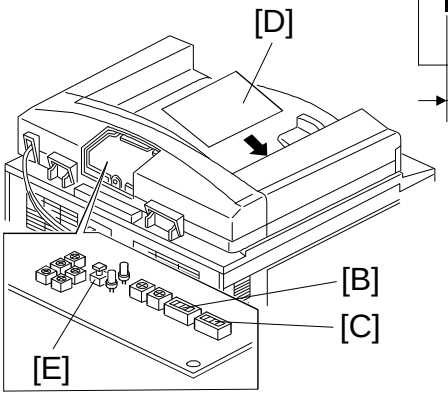

A610R524.wmf

NOTE: 1) After replacing the DJF main board, always perform the adjustment using VR102 on the DJF main board.

2) At other times, adjust with either the base copier SP mode or VR102. Both procedures will move the original stopping position.

3) After finishing the adjustment, be sure to turn off the dip switches.

– Using VR102 –

1. Remove the copier's left original scale [A] (2 screws).
2. Remove the small cover at the rear of the DJF upper cover (1 screw).
3. Turn on dip switch 101-2 and -4 [B].
4. Turn on dip switch 102-1 and -4 [C].
5. Place a sheet of A4/8$^{1}/_{2}$" x 11" sideways paper [D] (64 g/m^{2}, 17 lb) on the original table.
6. Press switch 101 [E]. (Paper will be fed to the exposure glass.)
7. Raise the DJF carefully so that the original does not move.
8. Check that the distance between the trailing edge of the paper and the left edge of the rear original scale [F] is between 0 ~ 5 mm.
9. If the distance is not within this specification, adjust the registration with VR102. (Looking from the front, turning VR102 counter-clockwise will feed the paper more towards the left.)

– Using the Copier SP Mode –

NOTE: 1) When performing this adjustment, always make test copies using the "Copy In SP" mode. If you do not, the adjustment will not be performed properly.

2) Make sure that the DJF dip switches are returned to the standard setting of the base copier, if you have performed the adjustments using the DJF main board.

1. Remove the copier's left original scale (2 screws).
2. Turn off and on the copier main switch to initialize the machine.
3. Enter the copier SP mode, and open the DJF Registration Adjustment page.
4. Place a sheet of A4/8$\frac{1}{2}$" x 11" sideways paper (64 g/m^2, 17 lb) on the original table, and press the Copy In SP key.

   Select the two-sided original mode to invert the original paper. Also to save toner, select BLACK and A4 size paper. Then press the Start key.
5. After the original stops on the exposure glass, raise the DJF carefully so that the original does not move.
6. Check that the distance between the trailing edge of the paper and the left edge of the rear original scale is between 15 ~ 20 mm.
7. If the distance is not within this specification, adjust the registration by pressing the ⊞ and ⊟ keys of the two-sided mode inside the SP mode. The original paper stopping position will change accordingly. (If you press ⊟, the original will be fed more towards the left.)

15.19 SIDE-TO-SIDE REGISTRATION ADJUSTMENT

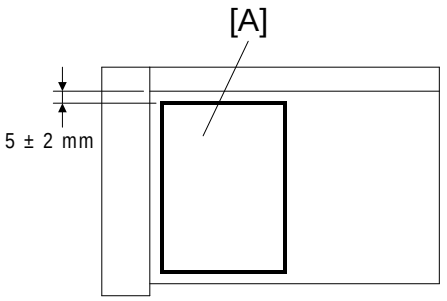

A610R531.wmf

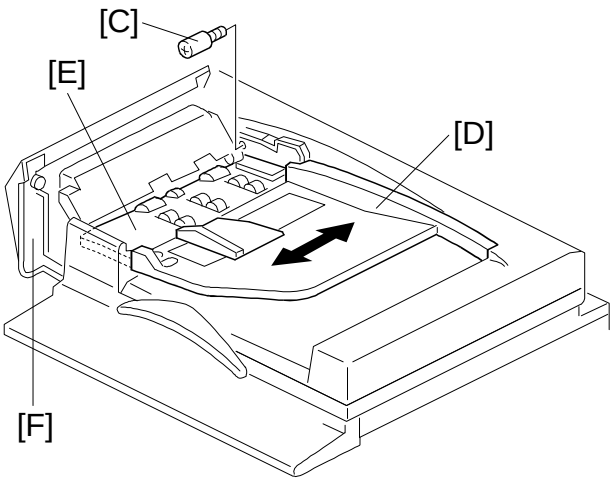

A610R532.wmf

1. Place a sheet of A4/8 1/2" x 11" sideways paper [A] (64 g/m^2, 17 lb) on the original table and press the Start key.
2. Check the side-to-side registration comparing the original paper and the copied paper.
3. If the side-to-side registration is not within 0 ± 2 mm, enter the SP mode and perform the following steps:
   1) Open the DJF Side To Side Registration Adjustment page.
   2) Change the setting with the ⊞ and ⊟ keys to meet the above specification. (The original stopping position will not change.)
   Note that the direction of the image shift will differ for each base copier.
4. If it is still out of specification, leave SP mode and perform the following original table positioning adjustment:
   1) Place a sheet of A4/8 1/2" x 11" sideways paper [A] (64 g/m^2, 17 lb) on the original table and press the Start key.
   2) After the original stops on the exposure glass, gently raise the DJF so that the original does not move.
   3) Check if the gap between the rear edge of the paper and the original rear scale is 5 ± 2 mm.
   4) It the gap is not within specification, remove the stopper screw [C], loosen the 8 screws securing the original table [D] and the original guide [E] and shift the original table and the original guide position accordingly.

NOTE: Before putting an original on the original table again, open and close the feed unit cover [F].

15.20 PREVENTING THE REAR SIDE OF ORIGINALS FROM BECOMING DIRTY

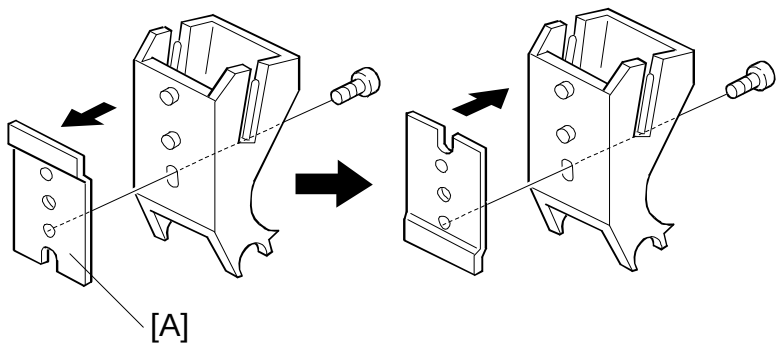

A610R534.wmf

NOTE: Perform the following adjustment only when needed (if the friction belt needs to be changed but there is no spare friction belt available). However, after this adjustment, thick originals are likely to be misfed, so it is best to avoid this adjustment if the customer says that thick originals will be used.

1. Remove the friction belt assembly. (Refer to Friction Belt Replacement.)
2. Remove the adjusting plate [A] and re-install it as shown (the belt folds about 1 degree) or remove the adjusting plate (the belt folds about 2 degrees).

SORTER
(Machine Code: A322)

1. SPECIFICATION

Paper Size for Bins:	Maximum: A3 (lengthwise) or 11" x 17" (lengthwise) Minimum: A5 (sideways) or 5 1/2" x 8 1/2" (sideways and lengthwise)
Copy Paper Weight:	50 - 90 g/m^2 or 14 - 24 lb
Number of Bins:	15 bins + interruption bin (total 16 bins)
Bin Capacity:	Sort mode: 50 sheets/bin (A4 or 8 1/2" x 11") Stack mode: 40 sheets/bin (A4 or 8 1/2" x 11")
Top Bin Capacity:	150 sheets (A4 or 8 1/2" x 11")
Print Bin Capacity:	40 sheets/bin (80 g/m^2 or 20 lb
Interrupt Bin Capacity:	100 sheets (A4 or 8 1/2" x 11")
Power Source:	DC 24V from the copier
Power Consumption:	0.03 kW
Dimensions (W x D x H):	499 x 535 x 600 mm 19.6" x 21.1" x 23.6"
Weight:	22 kg, 48.5 lb
Interface Requirement:	A sorter adapter is needed.

2. MAJOR DIFFERENCES FROM THE BASE COPIER'S SORTER (A511)

- The number of bins has been changed. (Requests from the field.)

Sorter for This Machine	Sorter for Base Copier
15 bins + interruption bin	10 bins + interruption bin + print bin

- The exterior color has been changed. (New corporate identity color)

FILM PROJECTOR UNIT

(Machine Code: A718)

1. SPECIFICATION

Acceptable Film Types:

- Type: Positive film/Negative film
- Size: 35 mm - Approx. 140 x 210 mm
  Others: 45 x 60 mm, 60 x 60 mm, 60 x 70 mm, 60 x 80 mm, 60 x 90 mm, 4" x 5"
  Max: 142 x 210 mm or 5.6" x 8.2"
- Mount: Yes (Up to 5 frames can be set in the film holder.)
- Strip: Yes (A series of 6 frames can be set in the film holder.)

Focusing: Fixed/Manual

Effective Film Area:

- 35 mm: Approx. 21.5 x 33.0 mm
- Other Sizes: Full Size

Projection Ratio

- 35 mm: Approx. x 6
- Other Sizes: x 1

Copy Image Size

- 35 mm mount: 120.8 x 192.7 mm
- 35 mm strip: 129.3 x 198.6 mm
- Other Sizes: Full Size

All the reproduction features of the copier are available.

Power Source: 115 V 60 Hz, more than 1.0 A
220 ~ 240 V 50/60 Hz, more than 0.6 A

Power Consumption: Maximum: less than 185 VA

Dimensions (W x D x H): Projector: 300 x 442 x 212 mm
11.8" x 17.4" x 8.35"

Mirror Unit: 298 x 232 x 50 mm
11.73" x 9.13" x 1.97"

Weight: 11 kg or 24.3 lb

Remarks: The holder is required for installation.

2. MAJOR DIFFERENCES FROM THE BASE COPIER'S FILM PROJECTOR (A998)

Enhancements for this FPU	Purpose
The projector lamp light intensity has been increased.	To improve the reproduction.
The material of the transparent parts of the film strip/slide holders have been changed.	To improve the holders concerning attracting dust particles, and reduce the appearance of Newton ring patterns on copies.
The material of the guard unit has been changed.	To reduce the attraction of dust particles to the guard unit.
The height of the guard unit when placed on the exposure glass has been changed.	To flatten a curled original (positive film) on the exposure glass more effectively.
The height adjustment procedure has been changed.	For easier servicing of the machine.

- The exterior color has been changed. (New corporate identity color)

COPIER ELCTRICAL COMPONENT LAYOUT

[PCB'S-1]

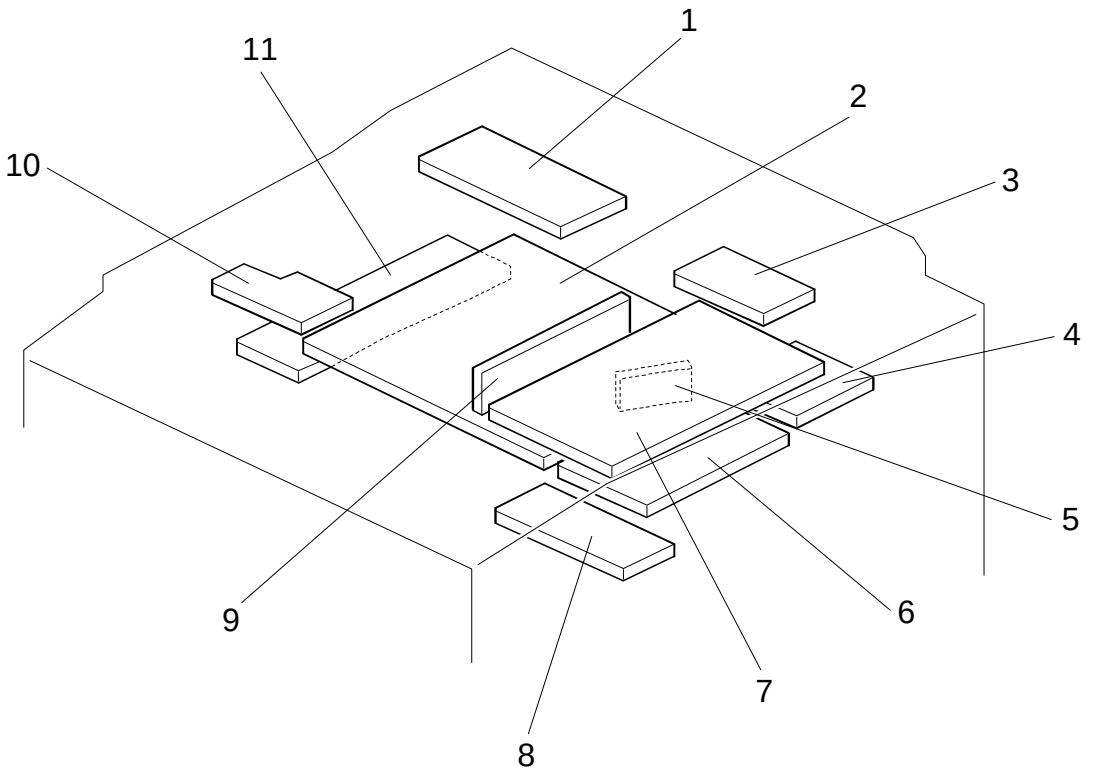

A172S500.wmf

[PCB'S-2]

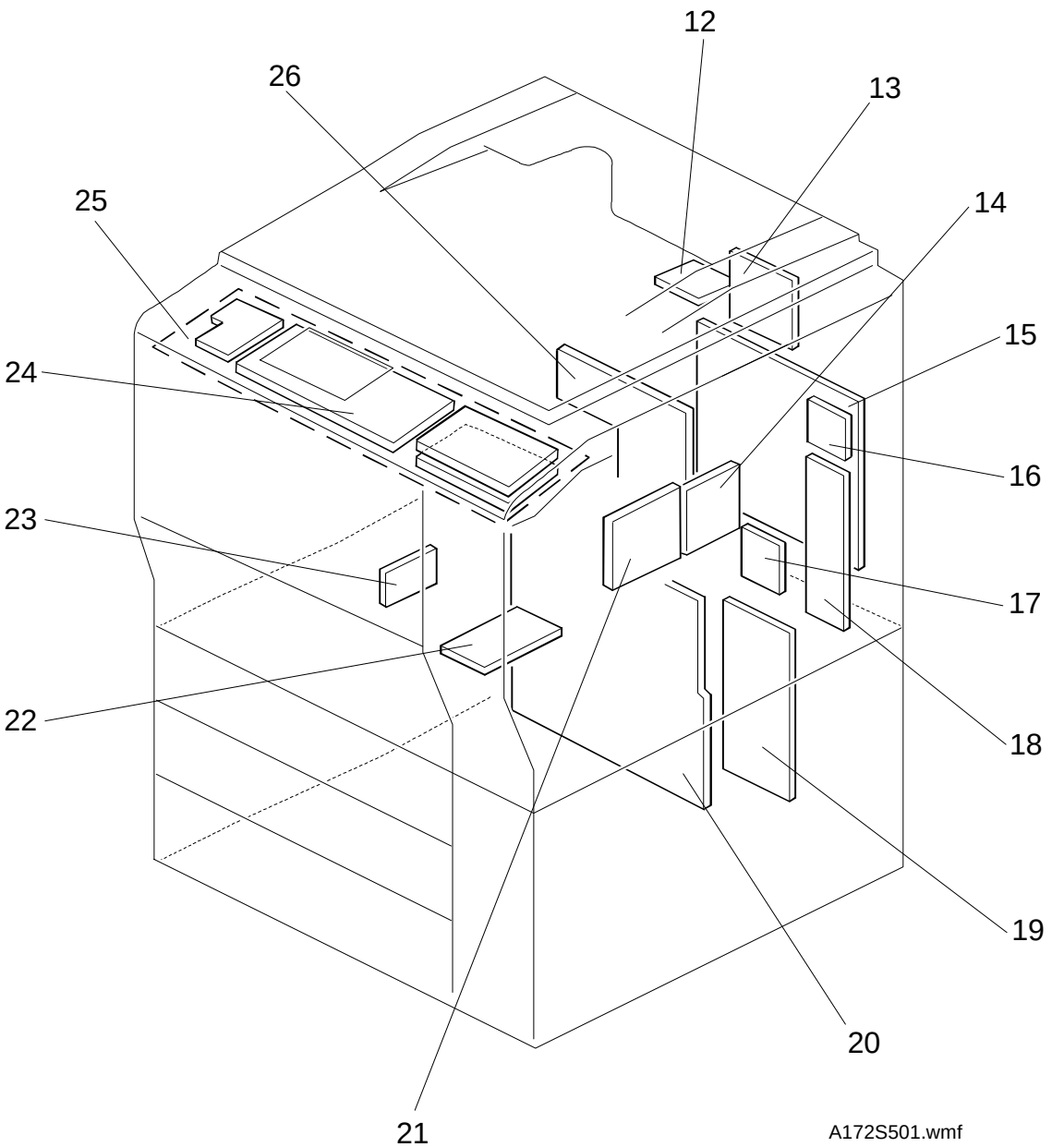

[MOTORS]

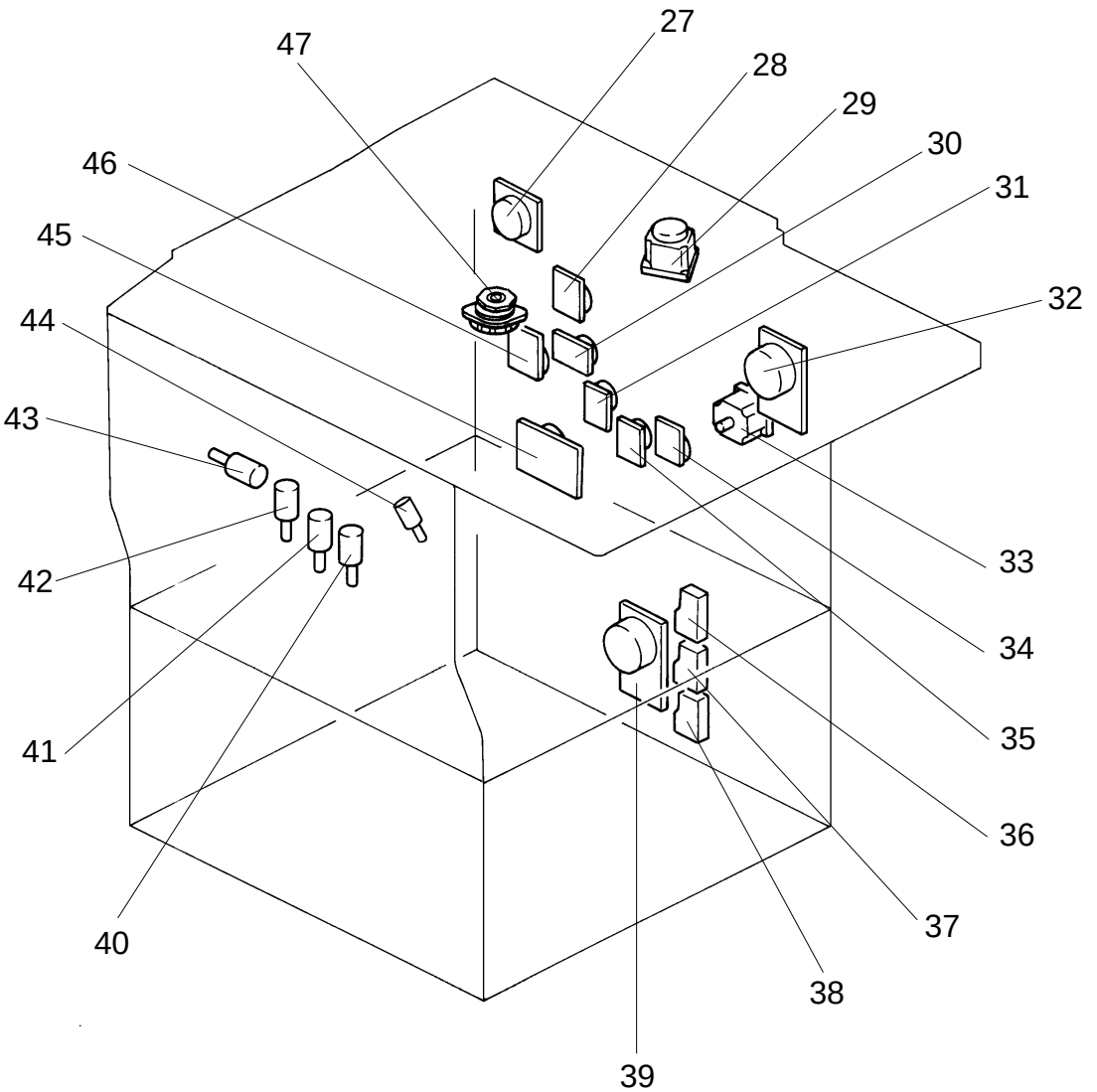

A172S502.img

[FANS]

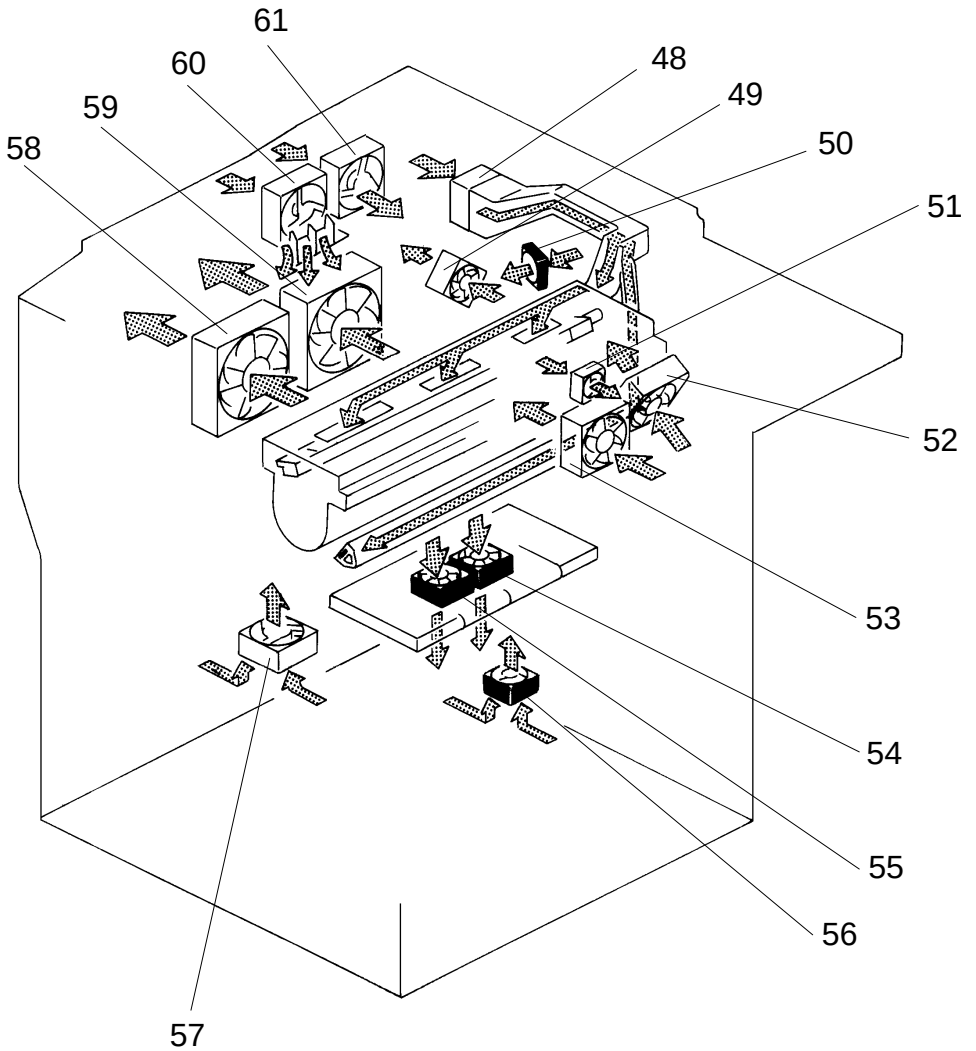

A172S503.img

[SENSORS & SWITCHES]

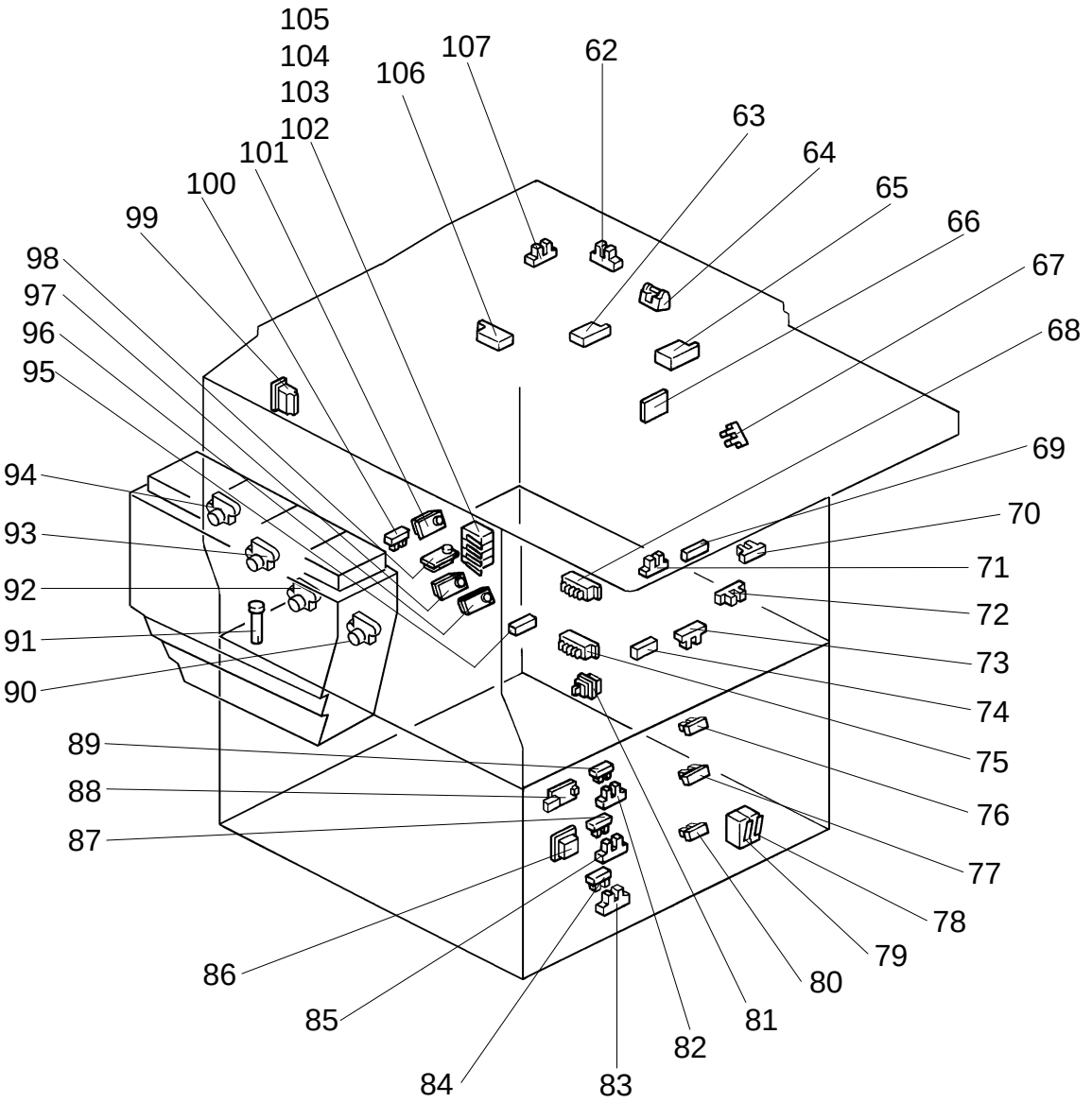

A172S504.img

[CLUTCHES & SOLENOIDS]

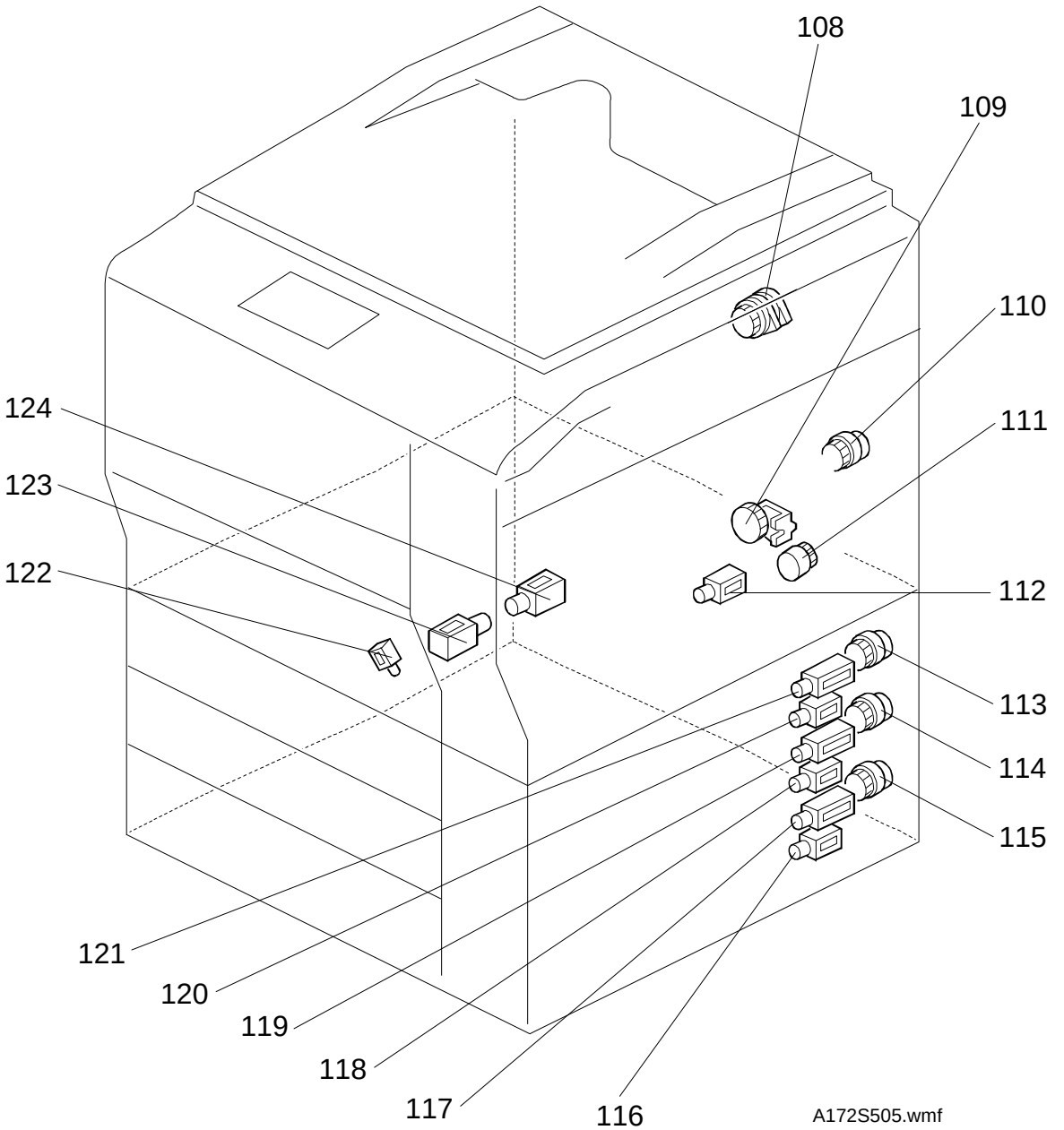

[OTHERS-1]

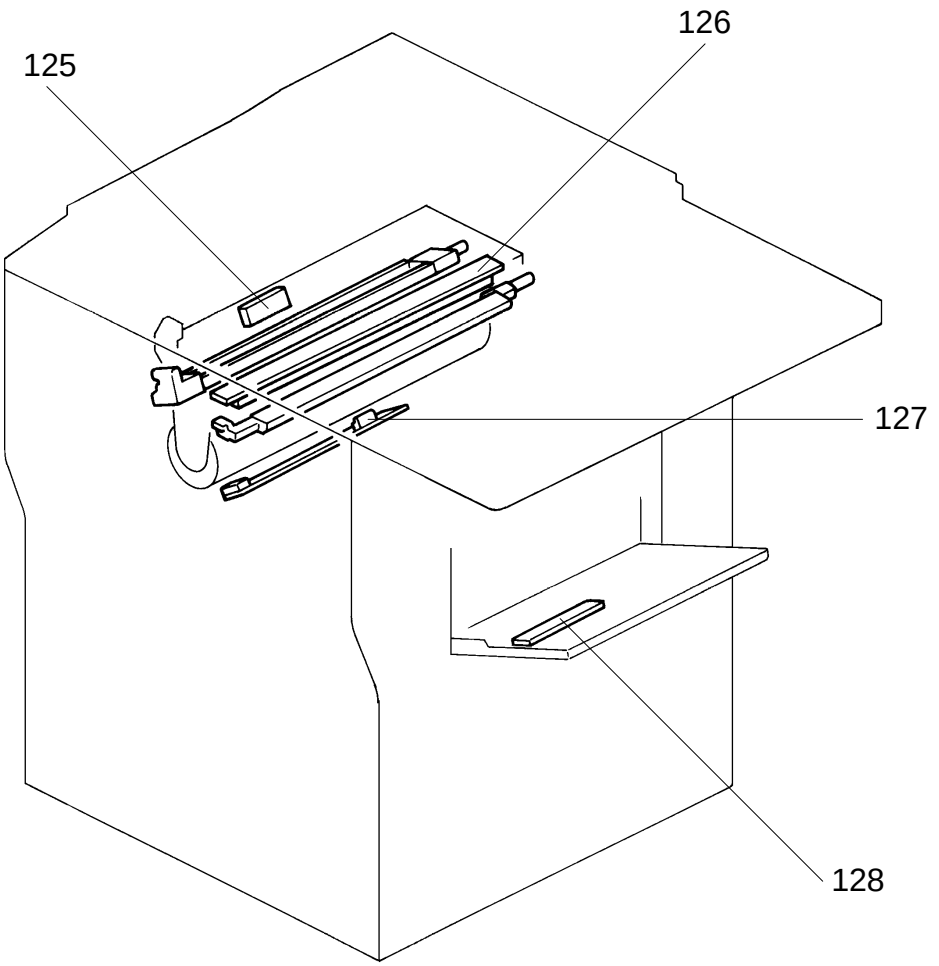

A172S506.img

[OTHERS-2]

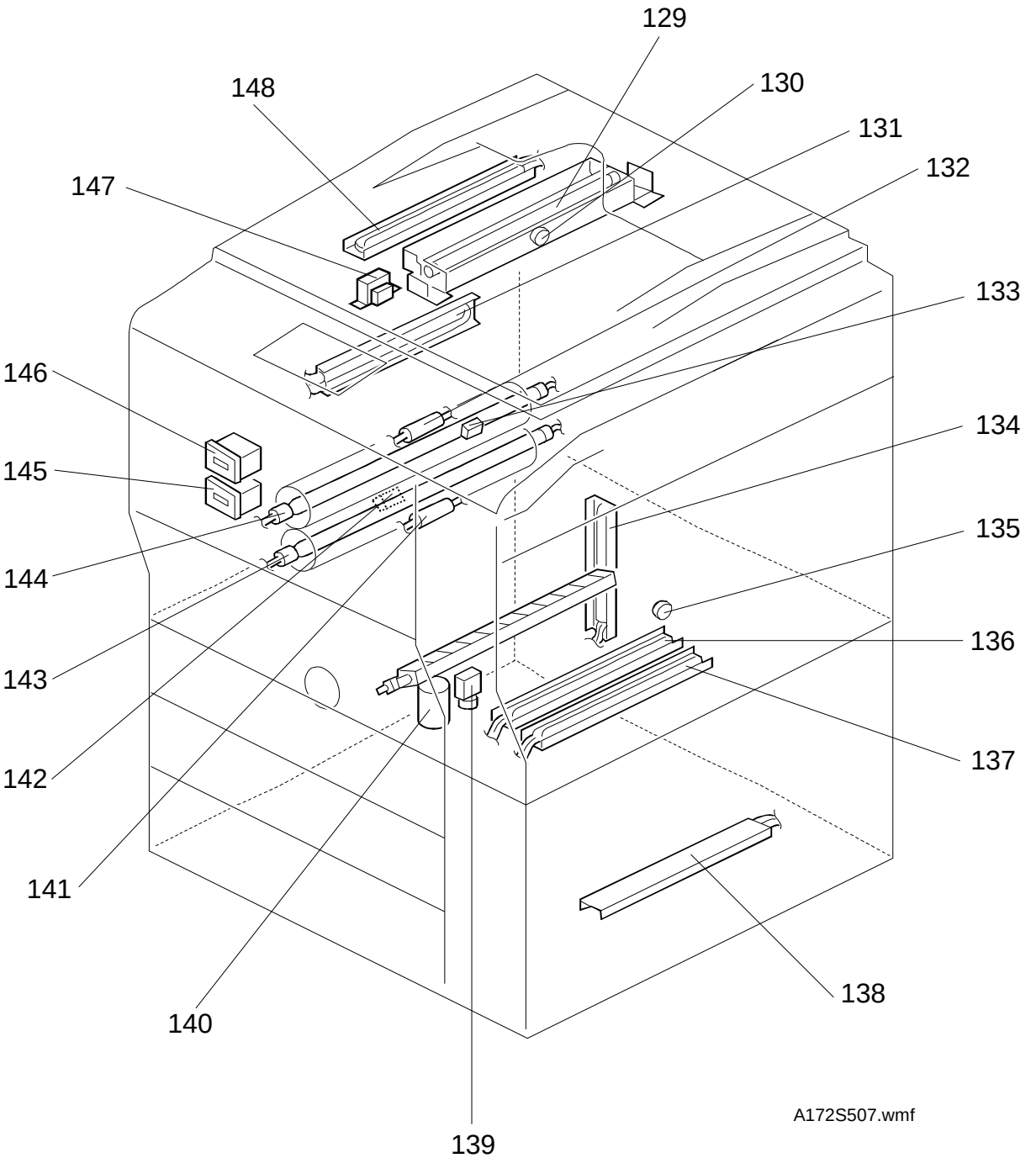
129
148
130
131
147
132
133
146
134
145
135
144
136
143
137
142
141
138
140
139
A172S507.wmf

[MECHANICAL COMPONENT LAYOUT]

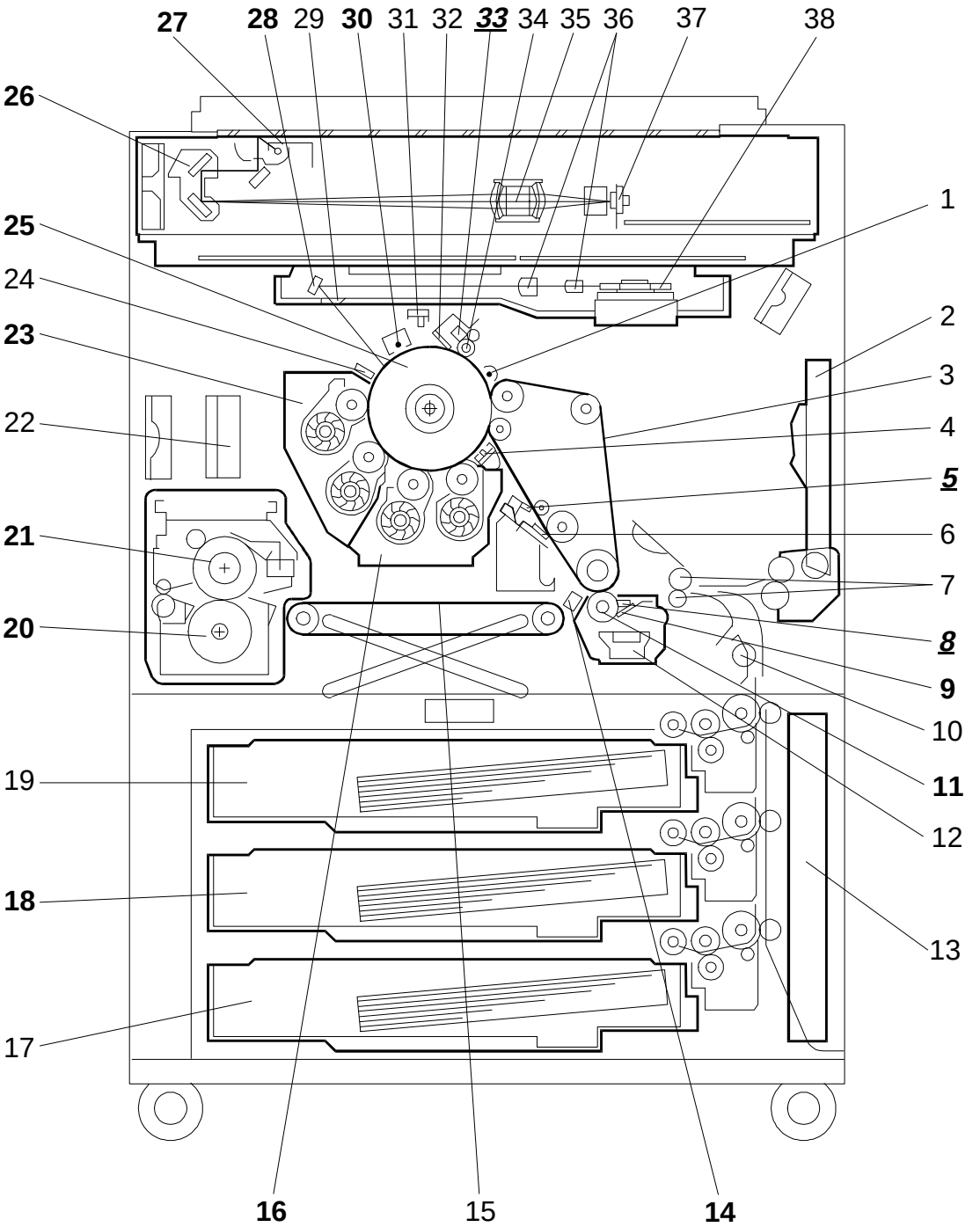

Bold Italic : Additional units from A109
Bold : Modify units from A109

[DRIVE LAYOUT]

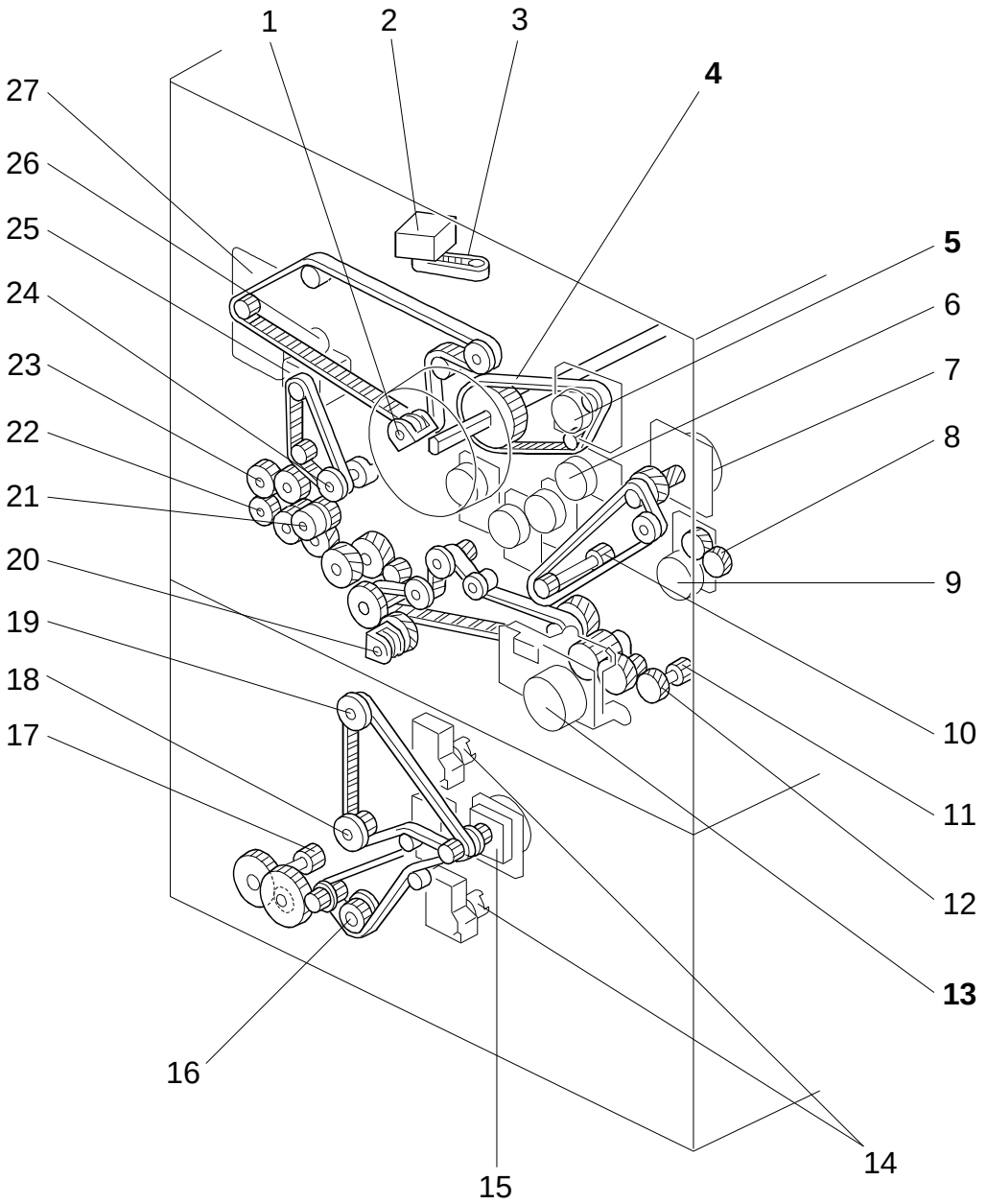

A172S509.wmf

Bold Italic : Additional units from A109
Bold : Modify units from A109

COPIER ELECTRICAL COMPONENTS

P = Printer
S = Scanner

Symbol	Name	Index No.	P-to-P	
Printed Circuit Boards				
PCB1	DC power supply	20	P	B3 to D3
PCB2	Lamp regulator	1	P	L11
PCB3	AC drive	11	P	A8 to A12
PCB4	High voltage supply to C/G	12	P	C16 to D15
PCB5	High voltage supply to B	26	P	G5
PCB6	High voltage supply to T1/PCC/BR	13	P	C15 to C16
PCB7	High voltage supply to T2	17	P	H7
PCB8	High voltage supply to D	22	P	J13 to K13
PCB9	Main control	15	P	E10 to J10
PCB10	Interface 1	21	P	A14 to K14
PCB11	Interface 2	18	P	B6 to L7
PCB12	Transfer belt motor drive	14	P	K10 to L10
PCB13	Paper feed interface	19	P	E3 to L3
PCB14	Noise filter	23	P	A3 to B3
PCB15	ID sensor	127	P	G13
PCB16	Operation panel	25	P	C5
PCB17	Polygon motor drive	8	P	F15 to F16
PCB18	CCD	9	S	D6 to G7
PCB19	Scanner control	7	S	A3 to K5
PCB20	Scanner drive	3	S	H6 to L7
PCB21	Image Discriminate	6	S	A14 to C15
PCB22	Display Editor interface	10	S	E10 to J12
PCB23	Operation Panel Control	24	P	G7 to H8
PCB24	IPU	2	P	E12 to J14
PCB25	IPU interface	4	P	A12 to D14
PCB26	LD drive	5	P	G16 to H16
PCB27	Laser synchronizing detector	66	P	I16
PCB28	Paper width detecting	128	P	K8 to L8
PCB29	Wire cleaner drive	16	P	G5 to H5
Motors				
M1	Bk to Development drive	46	P	J15 to J16
M2	C to Sleeve	31	P	D5
M3	M to Sleeve	35	P	E5
M4	Y to Sleeve	34	P	F5
M5	Drum	28	P	J15 to K15
M6	Bk to Sleeve	30	P	J15
M7	Transport	45	P	F5
M8	Color to Development drive	27	P	K15
M9	Cleaning	32	P	B13
M10	Scanner	29	S	H8

Symbol	Name	Index No.	P-to-P	
M11	Transfer belt	33	P	K12 to L12
M12	Paper feed	39	P	K1
M13	Polygon	47	P	F16 to I16
M14	Bk to Toner supply	43	P	H16
M15	C to Toner supply	42	P	H16 to I16
M16	M to Toner supply	41	P	I16
M17	Y to Toner supply	40	P	I16
M18	1st tray lift	36	P	I1
M19	2nd tray lift	37	P	I1
M20	3rd tray lift	38	P	I1
M21	Wire cleaner	44	P	H4
Fan Motors				
FM1	Fusing exhaust	49	P	E13
FM2	Charge inlet	48	P	E13
FM3	Inner cooling	57	P	G13
FM4	IPU cooling	52	P	H13
FM5	Polygon motor cooling	53	P	H13
FM6/7	Transport	55/54	P	J4
FM8/9	Development exhaust	58/59	P	E13
FM10	Optics exhaust	51	P	H6
FM11	LD cooling	50	P	I15
FM12/13	Optics cooling	60/61	P	I8
FM14	DC power supply cooling	56	P	D3
Sensors				
S1	By-pass feed table	73	P	E15
S2	Oil end	91	P	A13
S3	Exit	100	P	B13
S4	Transfer belt position	67	P	D13
S5	Humidity	88	P	G12
S6	Drum potential	125	P	H13
S7	M to Toner density	97	P	E7 to E8
S8	Y to Toner density	96	P	F7 to F8
S9	Bk to Toner density	101	P	G9
S10	C to Toner density	98	P	G9
S11	Transport	95	P	F7 to F8
S12	Registration	74	P	F7 to F8
S13	Registration guide set	70	P	G8
S14	Bk to Toner End	94	P	G16
S15	C to Toner End	93	P	G16 to H16
S16	M to Toner End	92	P	H16
S17	Y to Toner End	90	P	H16
S18	Transfer roller position	72	P	G7 to G8

Symbol	Name	Index No.	P-to-P	
S19	By-pass paper end	71	P	K8
S20	By-pass length	69	P	K8
S21	Toner overflow	86	P	K1
S22	1st lift	76	P	E1
S23	2nd lift	77	P	E1
S24	3rd lift	80	P	H1
S25	1st paper end	89	P	E1
S26	2nd paper end	87	P	F1
S27	3rd paper end	84	P	H1
S28	1st paper feed	82	P	F1
S29	2nd paper feed	85	P	G1
S30	3rd paper feed	83	P	G1
S31	Original length to 1	65	S	I8
S32	Original length to 2	63	S	J8
S33	Original width	106	S	J8
S34	Scanner unit lift	64	S	K8
S35	Platen cover position	62	S	K8
S36	Scanner HP	107	S	K8
Switches				
SW1/2/3/4	Front door safety	102/103/ 104/105	P	A15 to B16
SW5/6	Vertical transport set	78/79	P	L1
SW7	Main	99	P	A6 to B6
SW8	2nd paper size	75	P	J1
SW9	3rd tray set	81	P	H1 to I1
SW10	1st paper size	68	P	J1
Magnetic Clutches				
MC2	Transfer belt position	108	P	J15 to J16
MC3	By-pass feed	111	P	K8
MC4	Registration	110	P	I4 to I5
MC5	Transfer roller position	109	P	I4 to I5
MC6	1st feed	113	P	F1
MC7	2nd feed	114	P	G1
MC8	3rd feed	115	P	G1 to H1
Solenoids				
SOL1	Cleaning entrance seal	122	P	F15
SOL2	Lubricant bar	124	P	F15
SOL3	Cleaning blade	123	P	F15
SOL4	By-pass pick-up	112	P	K8
SOL5	1st pick-up	121	P	E1
SOL6	2nd pick-up	119	P	F1

Symbol	Name	Index No.	P-to-P	
SOL7	3rd pick-up	117	P	H1
SOL8	1st separation roller	120	P	F1
SOL9	2nd separation roller	118	P	G1
SOL10	3rd separation roller	116	P	G1
Lamps				
L1	Fusing	144	P	A14
L2	Pressure	143	P	A14
L3	Exposure	129	S	K9
L4	Quenching	126	P	G15 to G16
Heaters				
H1	Lower tray (option)	138	P	A5
H2	Upper tray (option)	134	P	A5
H3/H4	Transfer belt/roller	136/137	P	A5 to B5
H5	Optics anti-condensation	148	S	K12
H6	Drum	131	P	B10
Thermistors				
TH1	Fusing	133	P	A14
TH2	Pressure roller	142	P	A14
Thermofuses				
TF1	Fusing	132	P	A14
TF2	Pressure roller	141	P	A14
Thermoswitches				
TS1	Optics	130	S	K10
TS2	Transfer belt/roller	135	P	B4 to B5
Counters				
CO1	Black total	145	P	D15 to D16
CO2	Full color total	146	P	D15 to D16
Others				
CB1	Circuit breaker	139	P	A1 to A2
NF1	Noise filter	140	P	A2
CC1	Choke coil	147	P	B9

DJF ELECTRICAL COMPONENTS

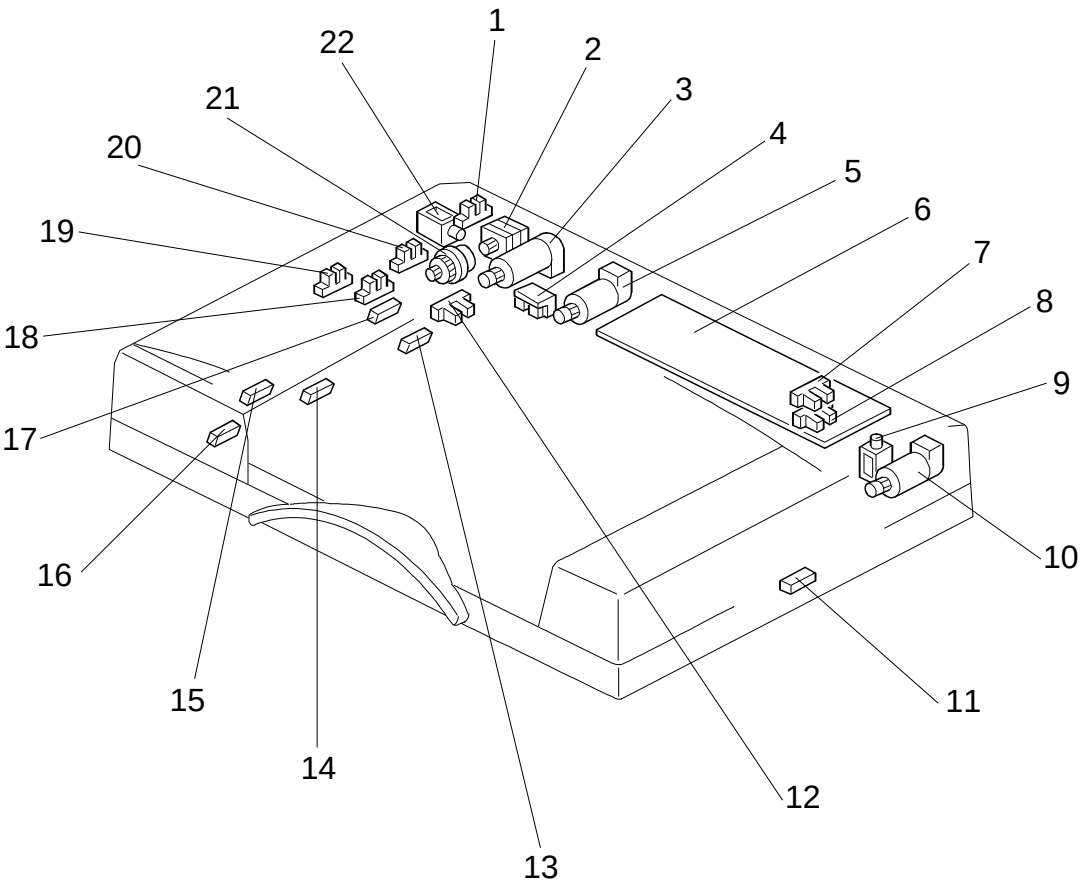

A610S500.wmf

Index No.	Description	Symbol	P-to-P
1	Feed-in Cover Open Sensor	S1	B2
2	Friction Belt Motor	M1	G1
3	Feed-in Motor	M2	G2
4	Indicator Panel Lamps	L1	G7
5	Belt Drive Motor	M3	G3
6	DF Main Board	PCB1	D1
7	DF Position Sensor	S2	B3
8	APS Start Sensor	S3	B3
9	Inverter Solenoid	SOL1	G6
10	Feed-out Motor	M4	G4
11	Feed-out Sensor	S4	B8
12	Pulse Count Sensor	S5	B5
13	Registration-2 Sensor	S6	B6
14	Original Width-1 Sensor	S7	B6
15	Original Width-2 Sensor	S8	B7
16	Original Width-3 Sensor	S9	B7
17	Registration-1 Sensor	S10	B6
18	Original Set Sensor	S11	B4
19	Original Feed Sensor	S12	B4
20	Friction Belt Turn Sensor	S13	B5
21	Feed-in Clutch	CL1	G5
22	Stopper Solenoid	SOL2	G6

FILM PROJECTOR UNIT ELECTRICAL COMPONENTS

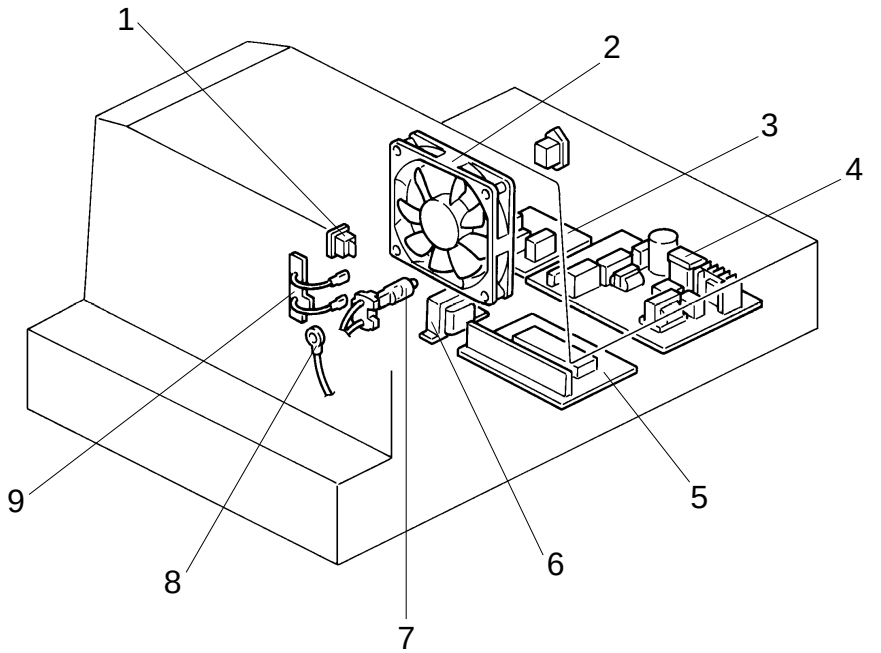

A718S500.img

Index No.	Description	Symbol	P-to-P
1	Projector Switch	SW1	D1
2	Lamp Cooling Fan	M1	E2
3	Noise Filter Board (220–240V machine only)	PCB3	B4
4	Projector Lamp Regulator	PCB1	E3
5	Projector Control Board	PCB2	F6
6	Transformer	TR1	C6
7	Projector Lamp	L1	E2
8	Lamp Thermistor	TH1	G7
9	Lamp Thermofuse	TF1	G2