RICOH	Technical Bulletin	No. RTB-001

SUBJECT: Service Manual Correction	DATE: 15 Oct. '96 PAGE: 1 of 7
PREPARED BY: M. Furusawa (FCP) CHECKED BY: T. Inoue	FROM: 1st Field Information Dept. QAC

CLASSIFICATION:		MODEL:
☐ Action Required	■ Revision of service manual	LILY (A172 / A199)
☐ Troubleshooting	☐ Information only	
☐ Retrofit Information	☐ Other	

Please correct your service manual as follows, referring to the attached pages already corrected.
(Corrected or added portions are indicated by thick rectangles.)

Page 1-6

Image Creation : Image Overlay

Basic type does not have this function.

Page 4-31

Dev. Sleeve Cleaning Condition in ACS Mode

The condition "Black mode" should be added to the functional explanation.

Page 4-59

Copier Special Mode

The following remarks have been added:

1. Change the setting from "0" to "4" for "Thick 2nd Feed" in SP <1>-2 By-pass Feed in order to ensure feeding of very thick paper in Special Mode 1.
2. Printer γ correction data in this mode is independent from that in the standard mode. (ACC results will not be reflected.)

Page 5-12

Step 10 (and 11)

Printer Free Run must be used instead of System Free Run.

- Reason -

In System Free Run mode, the test pattern will not be written on the drum surface but the actual scanned image will be written. If we use the System Free Run mode in this step, a blank image (= image of white paper) will made on the drum surface, causing too much friction between drum and drum cleaning blade.

Page 5-22

The following procedure should be added to the transfer roller unit:

A Printer Free Run should be performed after replacing the roller lubricant bar and/or the transfer roller.

Film Projector Unit Page 1

The weight in the Specifications section should be corrected.

2.2 FUNCTIONS: BASIC MODEL VS EDIT MODEL

This machine comes in two versions. Refer to the following table for features available on your machine.

Functions		Edit type	Basic type
Copy Image Density Adjustment (Auto/Manual)		✓	✓
Auto Color Selection		✓	✓
Full Color		✓	✓
Back		✓	✓
Single Color		✓	✓
Twin Color		✓	✓
Original Image Type Selection		✓	✓
Paper Selection (Auto/Manual)		✓	✓
Reducing/ Enlarging	Preset R/E	✓	✓
	Zoom	✓	✓
	Size Magnification	✓	✓
	Directional Size Magnification	✓	✓
	Poster Mode	✓	✓
Shift/Book	Centering/Cornering	✓	✓
	Margin Adjustment	✓	✓
	Erase	✓	✓
	Single Copies	✓	✓
Color Creation	Color Conversion	✓	✓
	Color Erase	✓	✓
	Color Background	✓	✓
Image Creation	Outline	✓	✓
	Positive/Negative	✓	✓
	Shadow	✓	✓
	Mirror	✓	✓
	Slanted	✓	✓
	Image Repeat	✓	✓
	Image Overlay	✓	----
Color Adjustment/ Memory	User Color Memory	✓	✓
	Single Color Adjustment	✓	✓
	Color Balance Adjustment	✓	✓
	Color Balance Sample	✓	✓
	Image Adjustment	✓	✓
Area Editing		✓	----
Interrupt Copying		✓	✓
Recall		✓	✓
Auto Reduce/Enlarge		✓	✓
Bypass Feed Copying		✓	✓
Duplex Copying		✓	✓
Default Setting		✓	✓
User Tools		✓	✓
Display Color		Full color	Black & white

Page	Item	Function	Note
<4> -1	Auto Process Control Self check	Factory use only	**"PID" setting must be used.**
	Toner Supply Control Mode Selection	Selects toner supply mode.	Default: Fuzzy **"Fuzzy" setting must be used.**
	Transfer Bias Humidity Selection	Selects the output voltage for the transfer belt and the transfer roller bias that are used if the humidity sensor is not working properly. Use the setting that best approximates the machine's location.	Default: Normal This function is effective under the following conditions: 1. Humidity sensor is not working well: • Output is 0. • Temperature output is over 49°C or below 2°C. • Humidity output is over 98% or below 2%. 2. Humidity sensor is disconnected. 3. Humidity sensor function is disabled: SP<1>P.16 Other SP #13=1
	Auto γ Correction Mode	Enable or disable the autoγ correction mode.	Default: ON
	Dev. Sleeve Cleaning Condition in ACS Mode	Selects the interval of the development sleeve cleaning mode in ACS&DJF mode and Black mode.	Default: 40 copies
	TC Correction	Selects the TC correction (Vcnt correction) on or off.	Default: ON **Do not change the setting in the field.**
	TC Correction Threshold	Selects to use or not to use the threshold set in the SP "<1>-4 TC Correction Threshold".	Default: Reset **Do not change the setting in the field.**
	Wire Cleaner Operation	Enables/disables the automatic charge corona wire/grid cleaning operation.	Default: Set (Enabled)

Service Tables

Page	Item	Function	Note
<10> -1	***Copier Special Mode***	Sets the following items for Copier Special Mode 1 and 2. **<1>SP Adjustment** -1: Lead Edge Registration (Printing) -1: Paper Feed Timing -2: Paper Feed Timing: By-pass -3: Face side Fusing Temp. -3: Back side Fusing Temp. -7: Transfer Roller Bias (Normal Humidity) -8: Transfer Roller Coefficient by Humidity Range ✻1 **<4>SP Special Features** -2: Printer γ Correction Data Rough Adjustment =Letter= -3: Printer γ Correction Data Rough Adjustment =Photo= -4: Printer γ Correction Data Fine Adjustment =Printed Photo= -5: Printer γ Correction Data Fine Adjustment =Glossy Photo= -6: Printer γ Correction Data Fine Adjustment =Letter= ✻2	This special mode should be used for user's special application paper which does not have good copy quality with standard settings. "<4>-5: Printer γ Correction Data Fine Adjustment = Glossy Photo=" is not effective (indication only). Special Mode 1 has the following default for very thick paper (about 200 g/m^2): <1>-7:Transfer Roller Bias (Normal Humidity) Normal Paper 1C: 1200 2C: 1500 3C: 1800 4C-L&P: 1500 ***Thick Paper*** ***1C: 1360 2C: 1500*** ***3C: 1800 4C-L&P: 1500*** OHP: S&L 1C: 2020 2C: 2080 3C: 2370 4C-L&P: 2080 Normal: Back 1C: 1200 2C: 1700 3C: 1980 4C-L&P: 1700 ***Thick: Back*** ***1C: 1600 2C: 1830*** ***3C: 2130 4C-L&P: 1830***
	Printer Special Mode	Sets the following items for Printer Special Mode 3. **<1>SP Adjustment** -1: Lead Edge Registration (Printing) -1: Paper Feed Timing -2: Paper Feed Timing: By-pass -3: Face side Fusing Temp. -3: Back side Fusing Temp. -7: Transfer Roller Bias (Normal Humidity) -8: Transfer Roller Coefficient by Humidity Range	This special mode should be used for user's special application paper (Printer mode) which does not have good copy quality with standard settings.

✻1 Change the setting from "0" to "4" for "Thick 2nd Feed" in SP <1>-2 By-pass Feed in order to ensure feeding of very thick paper in Special Mode 1.

✻2 Printer γ correction data in this mode is independent from that in the standard mode. (ACC results will not be reflected.)

Service Tables

6. Open [2]SP Test, page 2.

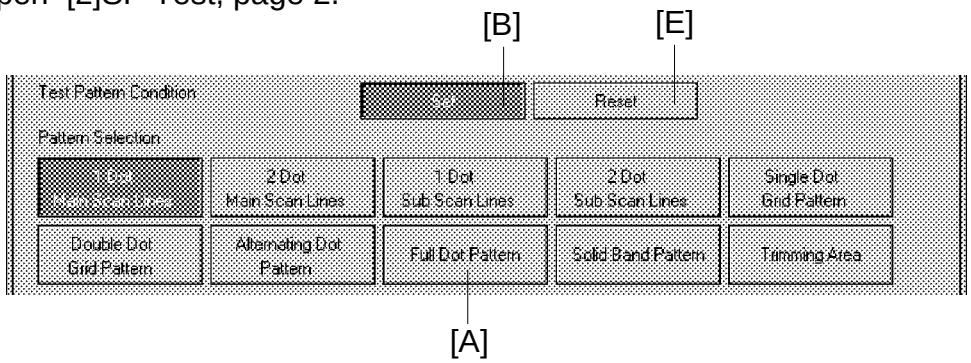

7. Select "*Full Dot Pattern*" [A] in **Pattern selection** and select "*Set*" [B] in **Test Pattern Condition**.

8. Touch the "Copy in SP" key and select "*Black*" copy mode.

9. Touch the "SP MODES" key and open [2]SP Test, page 5.

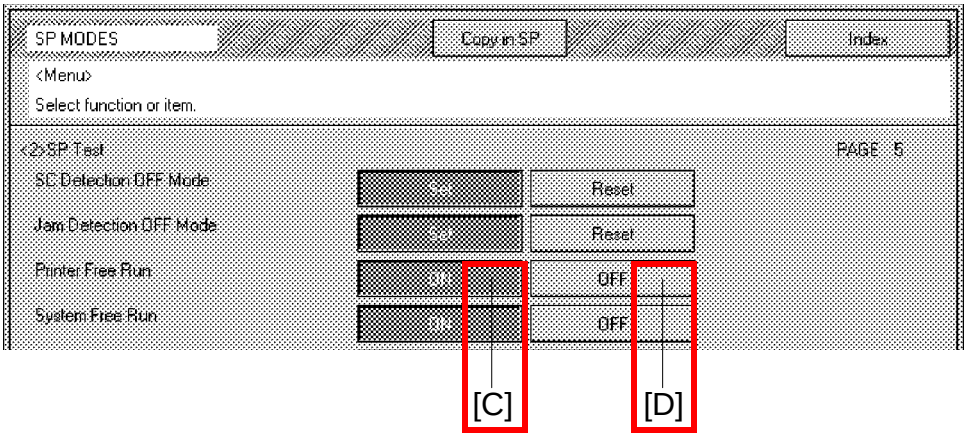

10. Start the **Printer Free Run** by touching "*ON*" [C] and wait for 6 to 7 minutes.

11. Stop the Printer Free Run by touching "*OFF*" [D].

12. Open [2]SP Test, page 2 and select "*Reset*" [E] for **Test Pattern Condition**.

13. **Wait for 5 minutes** and open [2]SP Test, page 4.

14. Perform **Process Control Selfcheck** by touching "*Start*".

15. Check the result of Process Control Selfcheck referring to the installation procedure and exit the SP mode.

16. Perform Auto Color Calibration.

6. TRANSFER ROLLER UNIT

When completing machine assembly, after changing the ***roller lubricant bar*** and/or the ***transfer roller***, perform steps 3 to 12 of "3.4 INSTALLING A NEW DRUM". This will cause the new lubricant bar to fully contact the roller. And also applies the lubricant to the roller surface evenly.

NOTE: 1) If these steps have been done for the new drum, it is unnecessary to repeat them.

2) If the developer is replaced together with the roller lubricant bar and/or the transfer roller, the above steps are unnecessary. (Lubricant is applied to the transfer roller surface during the developer initialization.)

3) Note that "***Printer Free Run***" must be used at step 10 of "3.4 INSTALLING A NEW DRUM".

6.1 ROLLER LUBRICANT BAR REPLACEMENT

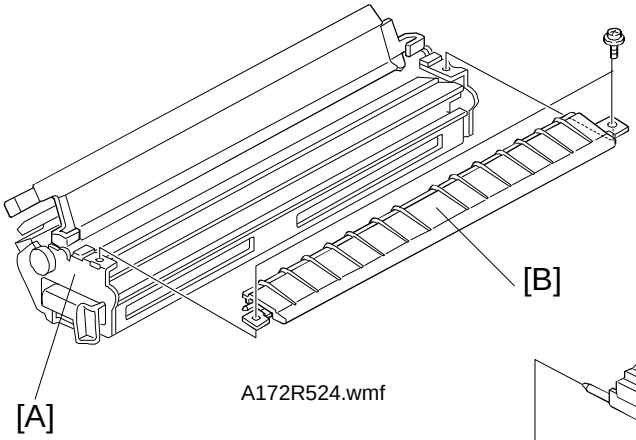

A172R524.wmf

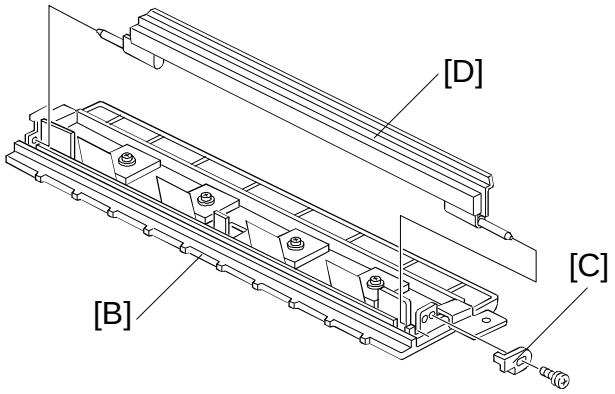

A172R525.wmf

1. Remove the transfer roller unit [A]. (See A109 Transfer Roller Unit Removal).
2. Remove the transfer roller guide [B] (2 screws).
3. Remove the hook [C] (1 screw) and replace the roller lubricant bar [D].

1. SPECIFICATION

Acceptable Film Types:

- Type: Positive film/Negative film
- Size: 35 mm - Approx. 140 x 210 mm
  Others: 45 x 60 mm, 60 x 60 mm, 60 x 70 mm, 60 x 80 mm, 60 x 90 mm, 4" x 5"
  Max: 142 x 210 mm or 5.6" x 8.2"
- Mount: Yes (Up to 5 frames can be set in the film holder.)
- Strip: Yes (A series of 6 frames can be set in the film holder.)

Focusing: Fixed/Manual

Effective Film Area:

- 35 mm: Approx. 21.5 x 33.0 mm
- Other Sizes: Full Size

Projection Ratio

- 35 mm: Approx. x 6
- Other Sizes: x 1

Copy Image Size

- 35 mm mount: 120.8 x 192.7 mm
- 35 mm strip: 129.3 x 198.6 mm
- Other Sizes: Full Size

All the reproduction features of the copier are available.

Power Source: 115 V 60 Hz, more than 1.0 A
220 ~ 240 V 50/60 Hz, more than 0.6 A

Power Consumption: Maximum: less than 185 VA

Dimensions (W x D x H): Projector: 300 x 442 x 212 mm
11.8" x 17.4" x 8.35"

Mirror Unit: 298 x 232 x 50 mm
11.73" x 9.13" x 1.97"

Weight: Less than 15 kg or 31.9 lb

Remarks: The holder is required for installation.

RICOH	**Technical Bulletin**	**No. RTB-002**
SUBJECT: Grease for Transfer Belt Unit and Transfer Roller Unit		DATE:Oct. 31, '96 PAGE: 1 of 1
PREPARED BY: N. Kaiya CHECKED BY: T. Inoue	FROM: 1st Field Information Dept. QAC	
CLASSIFICATION: ☐ Action Required ■ Revision of service manual ☐ Troubleshooting ☐ Information only ☐ Retrofit Information ☐ Other		MODEL: Lily

Please use the KS660 grease (P/N G0049668) for lubricating the end of the bias roller shaft and the end of the transfer roller shaft. The KS660 grease is more conductive than the 40M grease currently recommended.

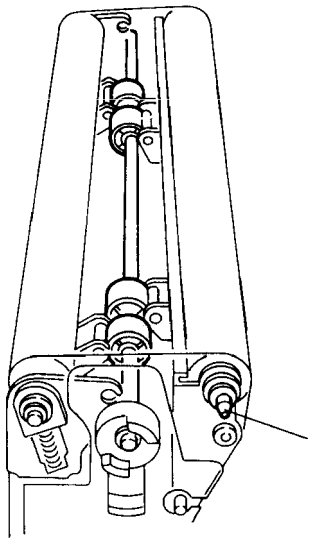

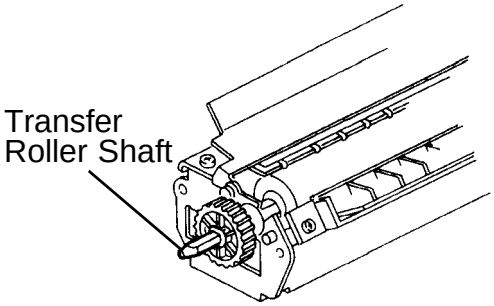

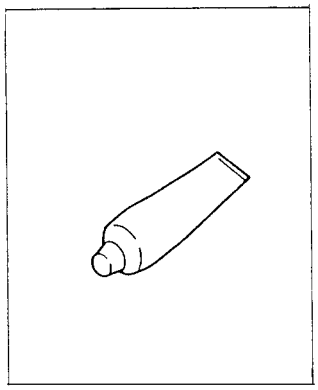

P/N G004 9668
Grease KS660

RICOH

Technical Bulletin

Model: Lily	Date: 28-Feb-97	No: 003	1/2
Subject: Transfer Belt Tension Release Wedge		Prepared by: N. Kaiya	
From: QAC 1st Field Information Dept.		Checked by: T. Inoue	

Classification:			
	☐ Troubleshooting	☐ Part information	☐ Action required
	☐ Mechanical	☐ Electrical	☐ Service manual revision
	☐ Paper path	☐ Transmit/receive	☐ Retrofit information
	☐ Other ( )		

In order to release the tension of the transfer belt during transportation, the Transfer Belt Release Wedges are installed on the front and rear belt tension roller bearing holders. Please do not forget to remove the wedges when installing the machine.

To remove the wedge, push the wedge toward the bearing holder and slide it inside slightly.

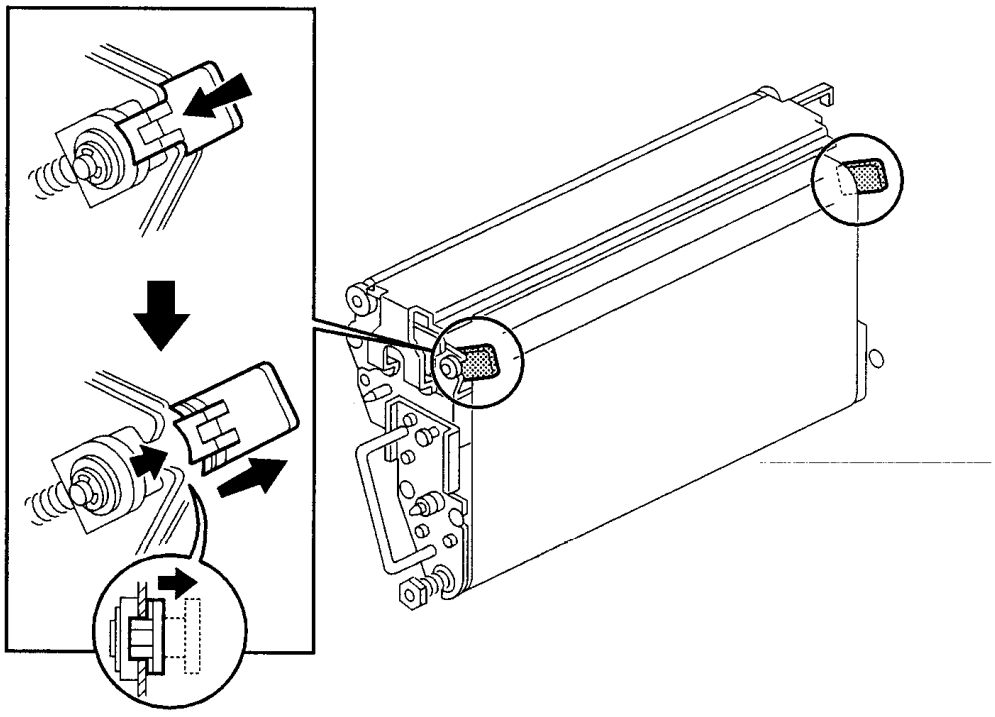

MODEL NAME	V/ Hz	Destination	CODE	SERIAL NUMBER
Nashuatec C606e Gestetner 2606e	115V/ 60Hz	USA, Canada	A172 - 10	AB67020001
Savin SDC206E	115V/ 60Hz	USA, Canada	A172 - 15	5A87010001
Aficio Color 5206	115V/ 60Hz	USA, Canada	A172 - 17	A7127010001
Nashuatec C606e Gestetner 2606e Rex Rotary CC8606E	220- 240V/ 50Hz	Europe, etc.	A172 - 22	AB77010001
Infotec 7316E	220- 240V/ 50Hz	Europe, etc.	A172 - 26	3J80170001
Aficio Color 5206	220- 240V/ 50Hz	Europe, etc.	A172 - 27	A7127010110
Aficio Color 5206	220- 240V/ 50Hz, 60Hz	Asia, Middle East	A172 - 29	A7127010184
Lanier 5606 DC	120V60Hz	USA	A172 - 55	L006070001
Sharp AR-C862	120V60Hz	USA	A172 - 57	From first production
Sharp AR-C862	120V60Hz	Europe	A172 - 67	From first production
Nashuatec C606 Gestetner 2606	115V/ 60Hz	USA, Canada	A199 - 10	AB4702XXXX
Savin SDC206	120V/ 60Hz	USA, Canada	A199 - 15	5A97010001
Aficio Color 5106	120V/ 60Hz	USA, Canada	A199 - 17	A7137020001
Nashuatec C606 Gestetner 2606 Rex Rotary CC8606	220- 240V/ 50Hz	Europe, etc.	A199 - 22	AB57010001
Infotec 7316	220- 240V/ 50Hz	Europe etc.	A199 - 26	3J70170001
Aficio Color 5106	220- 240V/ 50Hz	Europe etc.	A199 - 27	A7137010001
Aficio Color 5106	220- 240V/ 50Hz, 60Hz	Asia, Middle East	A199 - 29	A713702XXXX
Lanier 5606 DC	120V60Hz	USA	A199 - 55	From first production
Sharp AR-C861	120V60Hz	USA	A199 - 57	From first production
Sharp AR-C861	220- 240V/ 50Hz	Europe	A199 - 67	From first production

Model: Lily	Date: 15-Mar-97	No: 4
Subject: Fusing Unit	Prepared by: N. Kaiya	
From: QAC 1st Field Information Dept.	Checked by: T. Inoue T. Inoue	

Classification:			
	☒ Troubleshooting	☐ Part information	☐ Action required
	☐ Mechanical	☐ Electrical	☒ Service manual revision
	☐ Paper path	☐ Transmit/receive	☐ Retrofit information
	☐ Other ( )		

This RTB explains the countermeasure for the OHP offset problem which was found in our test with paper containing calcium carbonate (Aussedat Rey AR Color). In addition, the modification related to the countermeasure is explained.

PROBLEM

OHP sheets get calcium carbonate on the reverse side in the fusing unit. The problem is evident under the following conditions.

1. When Folex X-356 OHP film is used.
2. Paper containing a large amount of calcium carbonate is used prior to making copies with OHP film.
3. After a continuous single-color copy run using paper with calcium carbonate (according to our test, the problem is evident on the OHP film copied after more than 20 single-color A3 copies are made).

CAUSE

The calcium carbonate from the paper is deposited on the surface of the pressure roller and offset to the back side of the OHP sheet.

The calcium carbonate deposits on the surface of the pressure roller when there is less silicone oil on the surface of the pressure roller than usual. This condition only exists after a long series of single-color copies. This is because when making single-color copies, the sheets of copy paper are fed to the fusing unit with only a small interval between them. When making full-color copies, the fusing unit idles during four development cycles, so the pressure roller has sufficient time to receive silicone oil on its surface.

COUNTERMEASURE

A pressure roller cleaning blade and a pressure roller oil pad will be added in place of the pressure roller cleaning roller. The pressure roller cleaning roller will be removed. The pressure roller cleaning blade removes calcium carbonate on the pressure roller. It also removes excess silicone oil from the pressure roller. The silicone oil applied on the pressure roller surface prevents the pressure roller cleaning blade from making vibration noise.

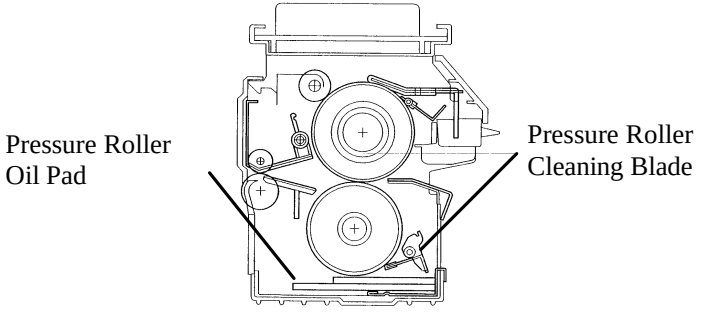

Gear

The addition of cleaning blade and oil pad applies excess load to the pressure roller which may result in copy quality problems such as mimizu image. To prevent this problem, gears are added to the front of the hot roller and pressure roller, which provide drive to the pressure roller. At the same time, the 61Z Gear has been changed to a 62Z Gear to compensate for the slight increase in the paper speed caused by providing drive to the pressure roller. To install the gears, the hot roller and the pressure roller have been modified with interchangeability x/o.

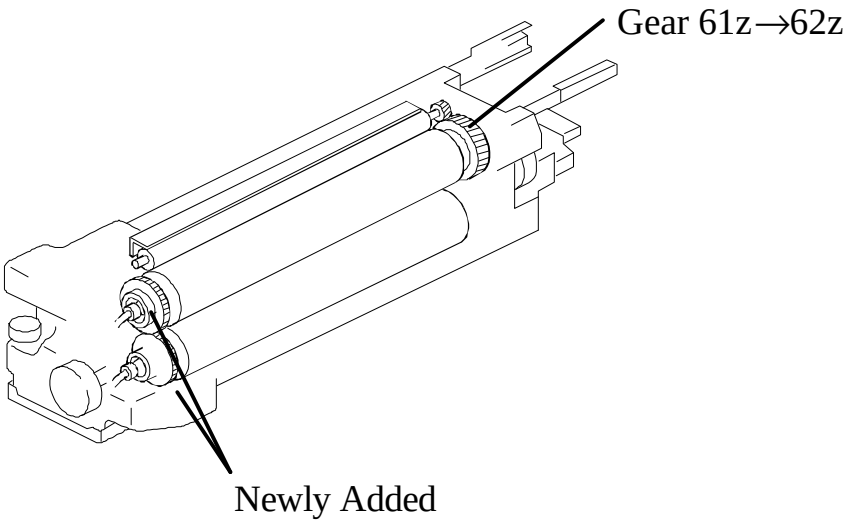

The screw holding the front fusing lamp holder has been changed to a shorter (M4 x 5) screw to prevent contact with the hot roller gear. The same screw type has been added to secure the ball bearing at the front of the hot roller. This is necessary to maintain the position of the hot roller gear and to ensure meshing with the pressure roller gear.

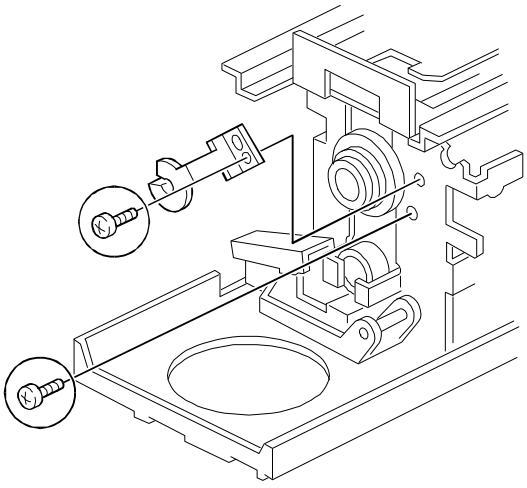

Model: Lily	Date: 15-Mar-97	No: 4

Modification Cut-in

This modification has been made to the February production run of machines destined for the European market, since paper with high calcium carbonate content is seen mostly in the European market. The modification to apply drive to the pressure roller has been made to all models to minimize the possibility of copy quality problems such as mimizu image. For the cut-in serial number, please refer to MB No.6.

Replacement Procedure

Pressure Roller Cleaning Blade

1. Remove the two pressure roller cleaning blade springs.
2. Remove the cleaning blade by sliding it out from the pins on the front and rear fusing unit side frames.

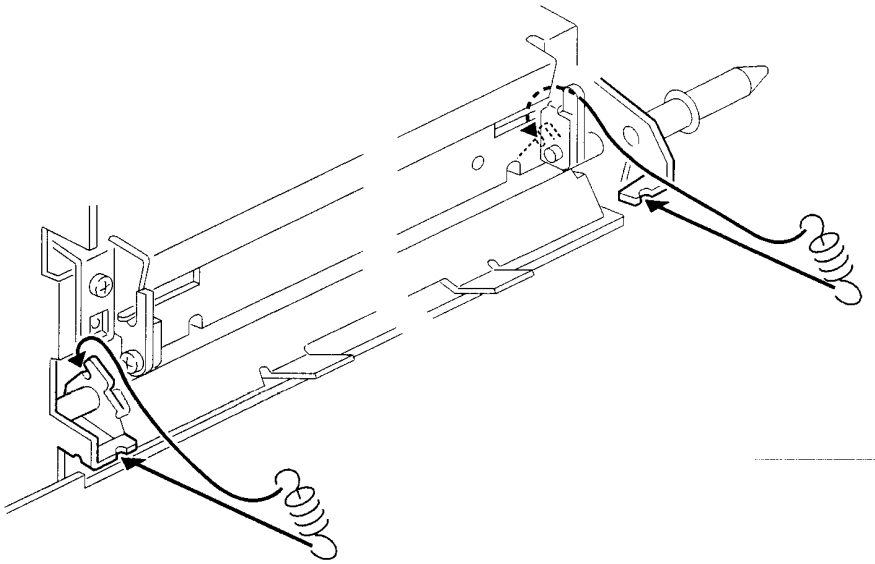

Pressure Roller Oil Pad

1. Remove the pressure roller cleaning blade.
2. Lift the two hooks of the oil pad and pull out the oil pad.

Note
When installing the new oil pad, the oil pan may be removed for easier installation

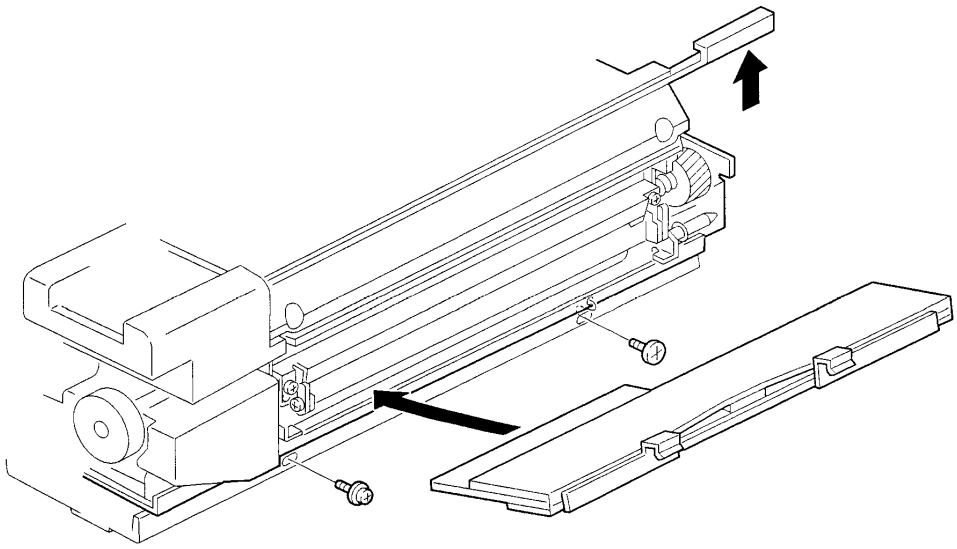

Hot Roller

Please change step no. 11 in the hot roller replacement procedure (DFC-α Service Manual page 5-101) as follows;

11. Remove the hot roller gear - 60Z, hot roller drive gear [I], heat isolating bushings [J], and ball bearings [K] (2 screws).

Pressure Roller

Please change step no.4 in the pressure roller replacement procedure (Page 5-103 in the DFC-α Service Manual) as follows.

4. Slide the pressure roller [A] toward the rear of the fusing unit and pull it out of the rear bearing. Lift the pressure roller from the front side and pull off the front bearing [B].

PM Table

The pressure roller and the pressure roller oil pad pads are PM parts. Please add them to the PM table in your Service Manual.

ITEM	EM	40 K	80 K	120 K	160 K	200 K	NOTE
Pressure Roller Cleaning Blade		C	R	C	R	C	Suitable Solvent Apply silicone oil to the edge after cleaning or replacement.
Pressure Roller Oil Pad		R	R	R	R	R	

Troubleshooting Procedure for Machines before Modification

If the problem is found with machines manufactured before the modification, please advise the customer to:

- Wipe off the calcium carbonate from the OHP sheet
- Use 3M OHP sheets.

Model: Lily	Date: 15-Apr-97	No: 5
Subject: Nip Band Width	Prepared by: N.Kaiya	
From: QAC 1st Field Information Dept.	Checked by: T. Inoue T. Inoue	

Classification:

☐ Troubleshooting	☐ Part information	☐ Action required
☐ Mechanical	☐ Electrical	☒ Service manual revision
☐ Paper path	☐ Transmit/receive	☐ Retrofit information
☐ Other ( )		

The nip band width of the fusing unit has been changed as follows. This is to minimize the possibility of mimizu image.

Location	New Standard	Old Standard
Both Edges (20 mm from the edges)	9.25±0.25 mm	9.5±0.5 mm
Center (confirmation reference)	9.0±2.5 mm	9.0±0.5 mm

To facilitate this adjustment on the production line, the pressure spring has been changed to a weaker type as follows. To distinguish the new and the old spring, its color has been changed from black to silver.

Old part number	New part number	Description	Qty	Int	Destination	Page	Index
AA063355	AA063562	Pressure Spring	2-2	X/O		85	21

It is not necessary to readjust the nip band width of the machines in the field. If any problem related to the nip band is found, please check it against the new standard and adjust if necessary. However, it may not be possible to achieve the new adjustment standard with the old pressure spring.

Please refer to the following table for the cut in serial number.

MODEL NAME	V/ Hz	DESTINATION	CODE	SERIAL NUMBER
Nashuatec C606e Gestetner 2606e	120V/ 60Hz	USA, Canada	A172 - 10	AB67020001
Savin SDC206E	120V/ 60Hz	USA, Canada	A172 - 15	5A86110001
Aficio Color 5206	120V/ 60Hz	USA, Canada	A172 - 17	A7126110001
Nashuatec C606e Gestetner 2606e Rex Rotary CC8606E	220- 240V/ 50Hz	Europe, etc.	A172 - 22	AB76110001
Infotec 7316E	220- 240V/ 50Hz	Europe, etc.	A172 - 26	3J81160001
Aficio Color 5206	220- 240V/ 50Hz	Europe, etc.	A172 - 27	A7126110046
Aficio Color 5206	220- 240V/ 50Hz, 60Hz	Asia, Middle East	A172 - 29	A7126110091
Lanier 5606 DC	120V60Hz	USA	A172 - 55	L006110001
Sharp AR-C862	120V60Hz	USA	A172 - 57	S167030001
Sharp AR-C862	120V60Hz	Europe	A172 - 67	S167020001
Nashuatec C606 Gestetner 2606	115V/ 60Hz	USA, Canada	A199 - 10	AB4612xxxx
Savin SDC206	120V/ 60Hz	USA, Canada	A199 - 15	5A96110001
Aficio Color 5106	120V/ 60Hz	USA, Canada	A199 - 17	A7136110001
Nashuatec C606 Gestetner 2606 Rex Rotary CC8606	220- 240V/ 50Hz	Europe, etc.	A199 - 22	AB56110001
Infotec 7316	220- 240V/ 50Hz	Europe etc.	A199 - 26	3J71160001
Aficio Color 5106	220- 240V/ 50Hz	Europe etc.	A199 - 27	A7136110041
Aficio Color 5106	220- 240V/ 50Hz, 60Hz	Asia, Middle East	A199 - 29	A713612xxxx
Lanier 5606 DC	120V60Hz	USA	A199 - 55	L0077010001
Sharp AR-C861	120V60Hz	USA	A199 - 57	S167030046
Sharp AR-C861	220- 240V/ 50Hz	Europe	A199 - 67	S167020023