Introduction

Symbology 5-3

Main Drives

PL 1.1 Tray Drives 5-4
PL 1.2 Main Drives 5-5

Optics

PL 2.1 Document Glass 5-6
PL 2.2 Scan Drive Motor 5-7
PL 2.3 Exposure Lamp and Carriage Assembly 5-8
PL 2.4A Lens Drive (1 of 2) 5-9
PL 2.4B Lens Drive (2 of 2) 5-10

Paper Supply

PL 3.1 Tray 1 Elevator Motor 5-11
PL 3.2 Tray 1 Assembly 5-12
PL 3.3 Tray 1 Module Assembly 5-13
PL 3.4A Tray 2,3 Assembly (1 of 2) 5-14
PL 3.4B Tray 2,3 Assembly (2 of 2) 5-15
PL 3.5 Tray 4 Assembly 5-16
PL 3.6 Tray 4 Module 5-17
PL 3.7 Tray 4 Module Covers 5-18
PL 3.8 Tray 4 Elevator Motor and Feed Motor 5-19
PL 3.9A HCF Covers and Latch Assembly (1 of 2) 5-20
PL 3.9B HCF Covers and Latch Assembly (2 of 2) 5-21
PL 3.10 HCF PWB, HCF Feed Motor 5-22
PL 3.11 HCF Tray Elevator Motor 5-23
PL 3.12 HCF Tray 5-24
PL 3.13 HCF Slides 5-25

Paper Feed and Registration

PL 4.1 RH Vertical Paper Feed Transport 5-26
PL 4.2 RH Door Feed Cover 5-27
PL 4.3 Tray 1 and 4 Paper Feeder Assembly 5-28
PL 4.4A All Trays Upper Paper Feeder (1 of 2) 5-29
PL 4.4B All Trays Upper Paper Feeder (2 of 2) 5-30
PL 4.5 Tray 1 and 4 Lower Feeder Assembly 5-31
PL 4.6 Tray 2 and 3 Feeder Assembly 5-32
PL 4.7 Tray 2 and 3 Lower Feeder Assembly 5-33
PL 4.8 Trays 2 and 3 Elevator Drive Assembly 5-34
PL 4.9 Paper Tray Bypass 5-35
PL 4.10 Paper Tray Bypass Feeder 5-36
PL 4.11 Registration and Primary Drives 5-37
PL 4.12 Registration Paper Path Assembly 5-38
PL 4.13 Upper Registration Paper Path Assembly 5-39
PL 4.14 Decurler and Inverter Assembly 5-40
PL 4.15 Inverter Drive Assembly 5-41
PL 4.16 Duplex Tray Slide 5-42
PL 4.17 Duplex Tray Drives 5-43
PL 4.18 Duplex Tray Feeder 5-44
PL 4.19 Duplex Tray Paddle Wheel Assembly 5-45
PL 4.20 Duplex Tray Side Guide Assembly 5-46
PL 4.21 Duplex Tray Entrance and Cover 5-47
PL 4.22 Duplex Tray Entrance Transport 5-48
PL 4.23A HCF Feeder Assembly (1 of 3) 5-49
PL 4.23B HCF Feeder Assembly (2 of 3) 5-50
PL 4.23C HCF Feeder Assembly (3 of 3) 5-51

Developer Module

PL 5.1 Black Developer Holder Assembly 5-52
PL 5.2 Black Developer Assembly 5-53
PL 5.3 Colour Toner Dispenser Motor and Developer Holder Assembly 5-54
PL 5.4 Colour Developer Assembly 5-55
PL 5.5A Toner Housing Assembly (1 of 2) 5-56
PL 5.5B Toner Housing Assembly (2 of 2) 5-57
PL 5.6 Black Toner Developer Suction Motor 5-58
PL 5.7 Developer/Toner (Colour) Table 5-59

Xerographics Module

PL 6.1 ISIL, Erase Lamps, Transfer, Detack Corotrons and ADC Sensor 5-60
PL 6.2 Transfer Corotron and Detack Corotron Assembly 5-61
PL 6.3 Copy Cartridge and Charge Scorotron Assembly 5-62

Fusing and Copy Transport

PL 7.1 Vacuum Motor and Duct Assembly 5-63
PL 7.2 Vacuum Transport Assembly 5-64
PL 7.3 Fuser Module Assembly and Fuser Interlock Switch 5-65
PL 7.4 Fuser Module Covers and Harness Assembly 5-66
PL 7.5 Fuser Web Assembly 5-67
PL 7.6 Fuser Drive and Heat Roll 5-68
PL 7.7 Fuser Pressure Roll 5-69
PL 7.8 Feedout Guides 5-70
PL 7.9A Decurler Assembly (1 of 3) 5-71
PL 7.9B Decurler Assembly (2 of 3) 5-72
PL 7.9C Decurler Assembly (3 of 3) 5-73

Electrical Components

PL 8.1 HVPS, LVPS 1, Duplex/Tray 4 PWB and SSR 5-74
PL 8.2 PWB's for LLM, IOT, Optics, Relay, and AC Drive 5-75
PL 8.3 ADC PWB, ISIL Control PWB and Backlight PS PWB 5-76
PL 8.4 EPROMS 5-77

Covers

PL 9.1 Latch, Gas Spring and Lock Assembly 5-78
PL 9.2 Document Cover, Top Cover and Control Panel 5-79
PL 9.3 Front/LH Covers and Castors 5-80
PL 9.4 Rear/ RH Covers 5-81

Cooling

PL 10.1 Front Fuser Fan and Optics Fan 5-82
PL 10.2 Fuser Cooling Motor and LVPS Cooling Motor 5-83

Accessories

PL 11.1 Edit Pad (With Tag 242) 5-84
PL 11.2 GRAIB/Foreign Interface Kit, Coin-Op Kit (RX). Mechanical Auditron Kit (USCO) 5-85
PL 11.3 Extreme/Cold Environment Kits 5-86
PL 11.4 High Humidity Kit 5-87
PL 11.5 Modified Illuminator Kit 5-88

DADF

PL 12.1 DADF Covers 5-89
PL 12.2 DADF Input Drive Motor and Document Drive Motor 5-90
PL 12.3A Document Input Transportation (1 of 2) 5-91
PL 12.3B Document Input Transportation (2 of 2) 5-92
PL 12.4A Duplex Input Transportation (1 of 2) 5-93
PL 12.4B Duplex Input Transportation (2 of 2) 5-94
PL 12.5 Document Transportation 5-95
PL 12.6 Document Output Transportation 5-96
PL 12.7 Entrance Tray 5-97

Sorter

PL 13.1 Index Belt and Drive Chain 5-98
PL 13.2 Sorter Main Drive Motor Assembly 5-99
PL 13.3 Index Assembly 5-100
PL 13.4 Vertical Index Drive 5-101
PL 13.5 Sorter Interlock Switches and Castors .. 5-102
PL 13.6 Sorter Covers 5-103
PL 13.7 Sorter Bin Tray and Output Tray 5-104
PL 13.8 Manual Stapler (W/Tag 901) 5-105

Sorter/Auto Stapler

PL 14.1 Bin Tray, Output Tray and Castors 5-106
PL 14.2 Spiral Cam Assembly and Drive Motor .. 5-107
PL 14.3 Stapler PWB and Tamper 5-108
PL 14.4 Transport Motor and Belts 5-109
PL 14.5 Upper Exit Guide and Latch 5-110
PL 14.6 Stapler Assembly 5-111
PL 14.7A Transport Assembly (1 of 2) 5-112
PL 14.7B Transport Assembly (2 of 2) 5-113
PL 14.8 Console and Covers 5-114
PL 14.9 Rail Assembly 5-115

Maintenance Installation Removal

PL 15.1 Maintenance Installation/Removal Kits .. 5-116

Consumables

PL 16.1 Consumables and Special Tools 5-117

Labels

PL 17.1 HCF Label set 5-118
PL 17.2A Processor Label set 5-119
PL 17.2B Processor Label set 5-120
PL 17.3 Cassette size Tray Label set 5-121
PL 17.4 DADF and Paper Bypass Tray Label set 5-122
PL 17.5 Edit Pad Label set 5-123
PL 17.6A Sorter/Sorter Stapler Label set (1 of 2) .. 5-124
PL 17.6B Sorter/Sorter Stapler Label set (2 of 2) .. 5-125

Electrical Connectors

PL 18.1A Terminal and Socket Kits 5-126
PL 18.1B Terminal and Socket Kits 5-127
PL 18.2 Harness Repair Kits 5-128
PL 18.3 Wire Saddle, Clamp Kits and Splicing Block 5-129
PL 18.4 Cable Tie and Push Mount Tie 5-130
PL 18.5 PWB Standoff and PWB Support 5-131
PL 18.6 Amp CT Connector (in-line adaptor) Kits, IDC Connector Kits 5-132
PL 18.7 Terminal Pin and Socket (Non-Kits) 5-133

Common Hardware

Common Hardware 5-134

Part Number Index

Part Number Index 5-135

Symbology

(15) This symbol shows that the part has been changed by tag number within circle. Information on modification is in change tag index.

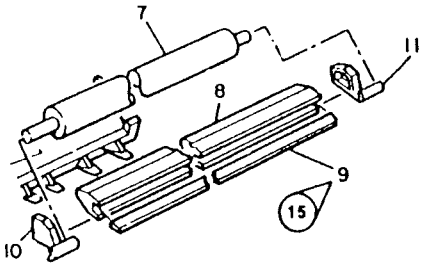

(15) This symbol shows that the configuration of part shown is the configuration, before the part was changed by tag number within circle.

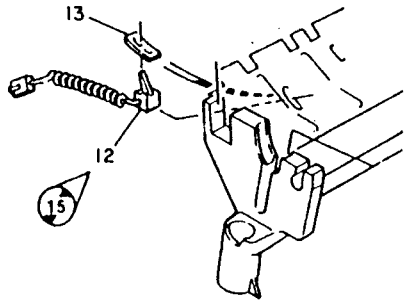

(10) This symbol shows where a part must be lubricated, and what type of lubrication must be used by the number in the symbol. The description and part number is in the parts list.

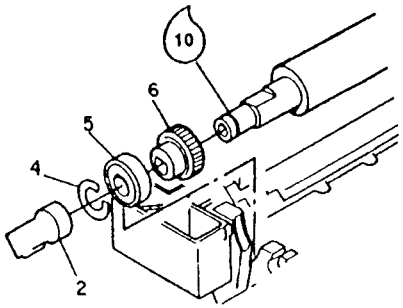

8-8-104-0

PL 1.1 Tray Drives

Item	Part	Description
1	7K91550	GEAR ASSEMBLY (29T)
2	13E93370	BEARING
3	68K91030	GEAR BRACKET ASSEMBLY
4	9E84980	SPRING
5	15K94782	PLATE
6	7E81250	GEAR (29T)
7	7E82670	GEAR (33/71T)
8	127K94710	FEED MOTOR 2/3 ASSEMBLY (MOT08-020)
9	7E81260	GEAR (25T)
10	7E81270	GEAR (16/23T)
11	7K91560	GEAR ASSEMBLY (29T)
12	13E80030	BEARING
13	7E81280	GEAR (29T)
14	63E90400	TAPE PAD
15	13E93520	BEARING

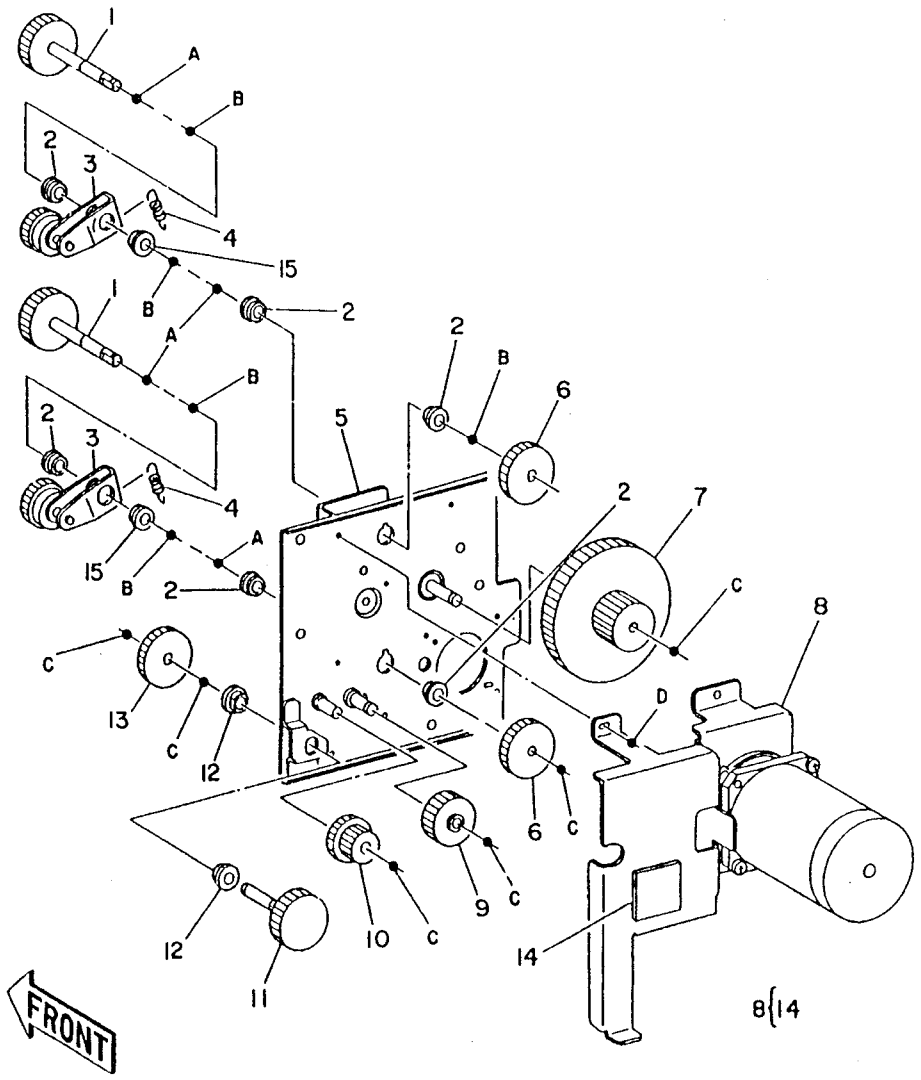

8-8-001-0

PL 1.2 Main Drives

Item	Part	Description
1	--	BRACKET ASSEMBLY (NOT SPARED)
2	9E84350	TORSION SPRING
3	7K91690	GEAR (24T)
4	--	LINK (NOT SPARED)
5	7K91700	GEAR (24T)
6	7K91680	GEAR (29/32T)
7	7E81950	GEAR (33T)
8	7E81960	GEAR (29T)
9	7E81970	GEAR (34/24T)
10	7E81940	GEAR (25T)
11	68K91740	GEAR LINK ASSEMBLY
12	9E26960	TORSION SPRING
13	127K94002	MAIN MOTOR ASSEMBLY (MOT04-300) (REP 4.4)
14	--	MAIN MOTOR (MOT04-300) (P/O ITEM 13)
15	--	GEAR (14/27T) (P/O ITEM 13)
16	7K91720	GEAR (24/42T)
17	7K91710	GEAR
18	127K94010	DEVELOPER MOTOR ASSEMBLY (MOT09-030)
19	127K94020	FEED MOTOR 1 ASSEMBLY (MOT08-005)
20	7E81980	GEAR (23T)
21	117K15370	EARTH WIRE ASSEMBLY

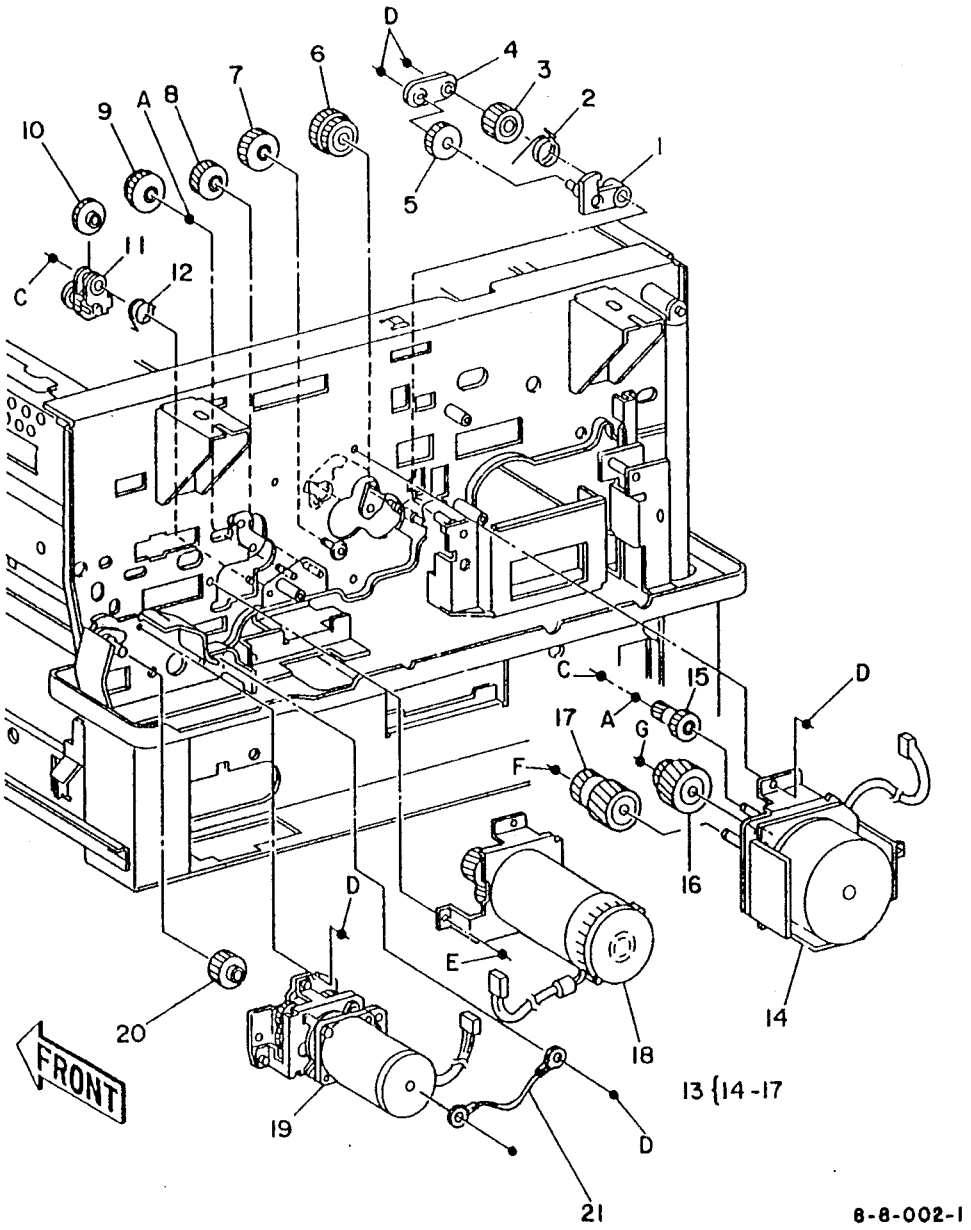

PL 2.1 Document Glass

Item	Part	Description
1	50K17203	REGISTRATION EDGE ASSEMBLY (ADJ 6.4) (RX/XLA 230V)
·	50K17512	REGISTRATION EDGE ASSEMBLY (ADJ 6.4) (USCO/XCL/XLA 125V)
2	90K1421	DOCUMENT GLASS (REP 6.1) (ADJ 6.4)
3	19K3170	DOCUMENT GLASS CLAMP
4	26P62661	SCREW
5	130K93643	INPUT MODULE ANGLE SENSOR (Q06-370) (REP 6.9)
6	--	OPTICS UNIT COVER (REP 6.3) (P/O ITEM 12)
7	130K93310	DOCUMENT SIZE SENSOR 3 (Q06-364) DOCUMENT SIZE SENSOR 4 (Q06-366)
8	--	ACTUATOR (P/O ITEM 5)
9	--	SENSOR (P/O ITEM 5)
10	127K94200	OPTICS FAN (MOT06-010) (REP 6.8)
11	57K70	SEAL GLASS (ADJ 6.4)
12	55K91030	OPTICS UNIT COVER ASSEMBLY
13	9E49201	PLATEN GLASS EARTH STRIP
14	68E4891	FRONT REGISTRATION EDGE SUPPORT
15	50K17522	REGISTRATION EDGE (USCO/XCL/XLA)
·	50K17532	REGISTRATION EDGE (RX/XLA)
16	68E4901	REAR REGISTRATION EDGE SUPPORT
17	--	SPACER (P/O ITEM 1)
18	--	REGISTRATION EDGE PLATE (P/O ITEM 1)

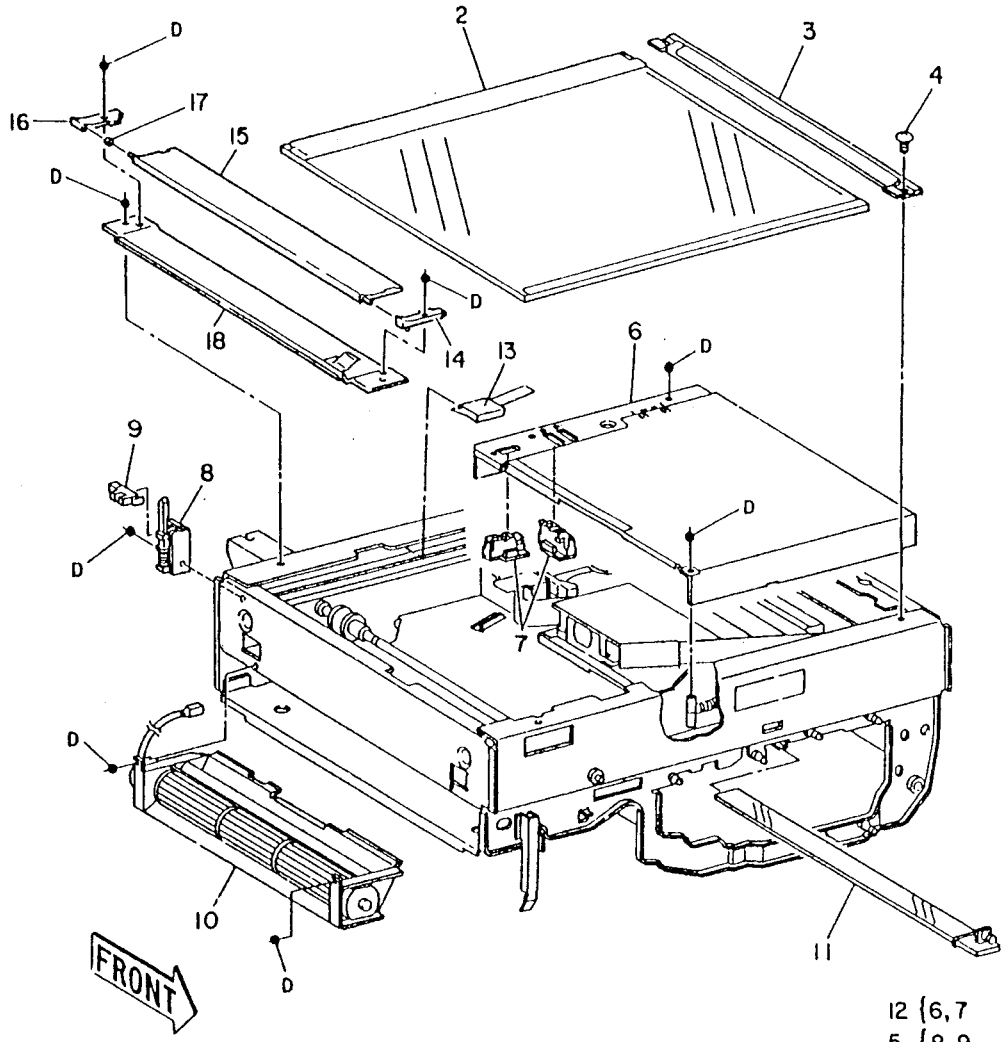

8-8-003-0

PL 2.2 Scan Drive Motor

Item	Part	Description
1	127K94691	SCAN DRIVE MOTOR (MOT06-1) (REP 6.4)
2	107K90391	CARRIAGE REGISTRATION SENSOR (Q06-305) (REP 6.13) CARRIAGE SENSOR 1 (Q06-300) (REP 6.13) CARRIAGE SENSOR 2 (Q06-303) (REP 6.13)
3	13E90980	BEARING (3MM)
4	19E93150	PAD
5	9E27130	TENSION SPRING
6	12E91920	SCAN CABLE (REP 6.5)
7	23E92360	SCAN DRIVE BELT
8	32E92180	SLIDE GUIDE
9	4K90311	DAMPER
10	6K92650	DRIVE SHAFT
-	--	DRIVE SHAFT (WITH TAG 210) (P/O ITEM 13)
11	20E93221	REAR CAPSTAN
-	--	REAR CAPSTAN (WITH TAG 210) (P/O ITEM 13)
12	20E92911	SCAN DRIVE PULLEY
13	606K3610	FRONT/REAR PULLEY CAPSTAN KIT (WITH TAG 210)
I 14	606K3960	IDLER PULLEY UPGRADE KIT (WITH TAG 212) (ILLUSTRATION NOT SHOWN)
I 15	13P60606	BEARING (10MM)

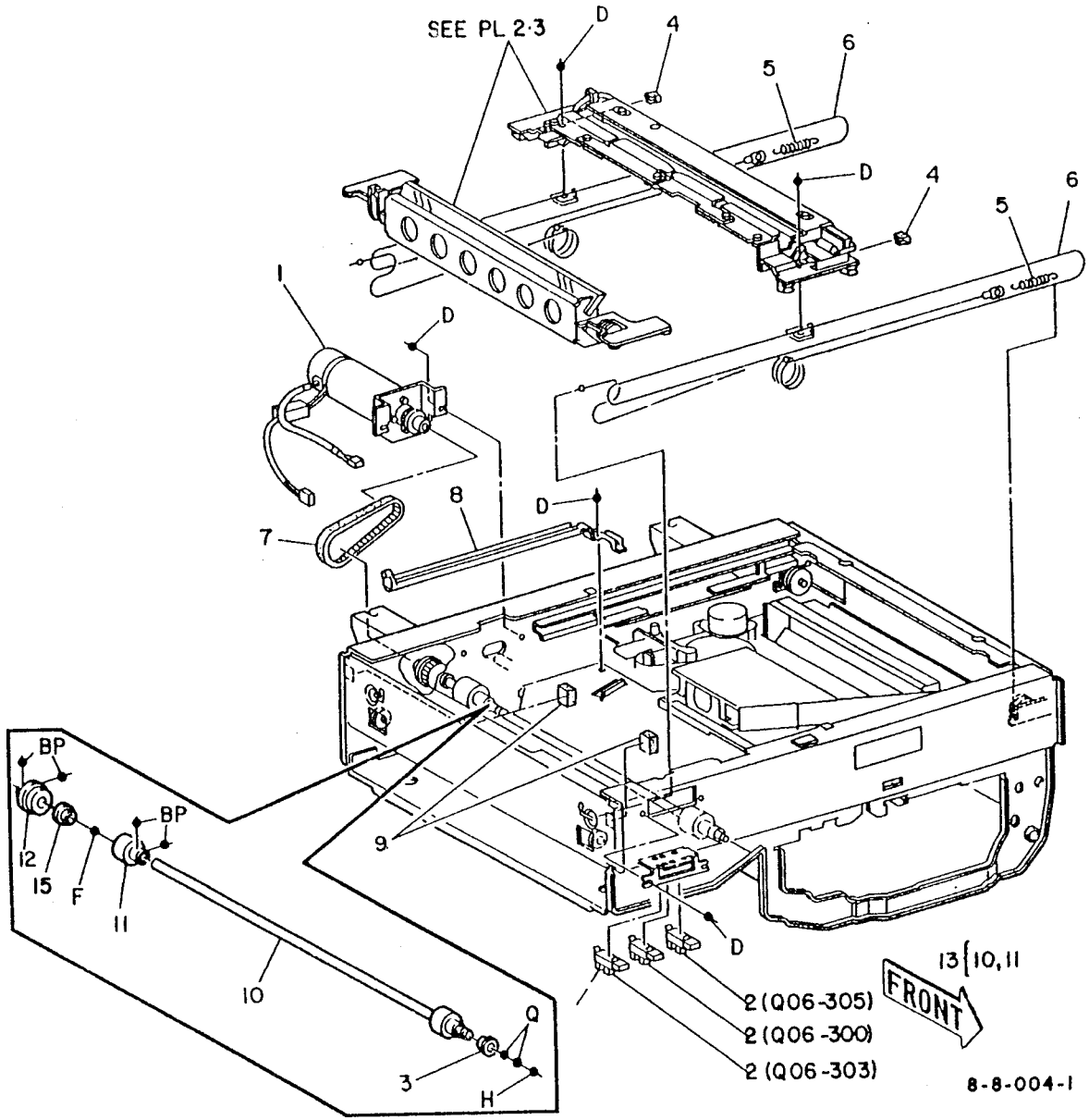

PL 2.3 Exposure Lamp and Carriage Assembly

Item	Part	Description
1	41K4241	FULL RATE CARRIAGE ASSEMBLY (125V) (REP 6.6) (ADJ 6.1)
·	41K3411	FULL RATE CARRIAGE ASSEMBLY (230V) (REP 6.6) (ADJ 6.1)
2	117K93151	REAR HARNESS
3	130E90310	LAMP THERMOSTAT (TC06-1)
4	--	REFLECTOR (P/O ITEM 1)
5	--	FRONT HARNESS (P/O ITEM 1)
6	122E91010	EXPOSURE LAMP (230V) (LP06-005) (REP 6.10) (ADJ 6.4) (CQ 1.3)
·	122E90620	EXPOSURE LAMP (125V) (LP06-005) (REP 6.10) (ADJ 6.4) (CQ 1.3)
7	113E90760	LAMP TERMINAL BLOCK
8	9E90750	MIRROR CLIP
9	62E91690	FULL RATE MIRROR (REP 6.14) (ADJ 6.4) (SEE NOTE 2)
10	19E93150	CARRIAGE PAD
11	9E84450	CARRIAGE SPRING
12	41K91660	HALF RATE CARRIAGE ASSEMBLY (REP 6.7) (ADJ 6.1)
13	9E84471	MIRROR CLIP
14	62E91700	UPPER HALF RATE MIRROR (REP 6.14) (ADJ 6.4) (SEE NOTE 2)
15	62E91710	LOWER HALF RATE MIRROR (REP 6.14) (ADJ 6.4) (SEE NOTE 2)
16	9E84461	MIRROR CLIP
17	32E92150	GUIDE
18	20E91380	CARRIAGE CABLE PULLEY
19	--	FULL RATE CARRIAGE SUPPORT (P/O ITEM 1) (SEE NOTE 1)

NOTE 1: For Modified Illuminator kit see PL 11.5

NOTE 2: For Modified Optics Heater kit see PL 11.3

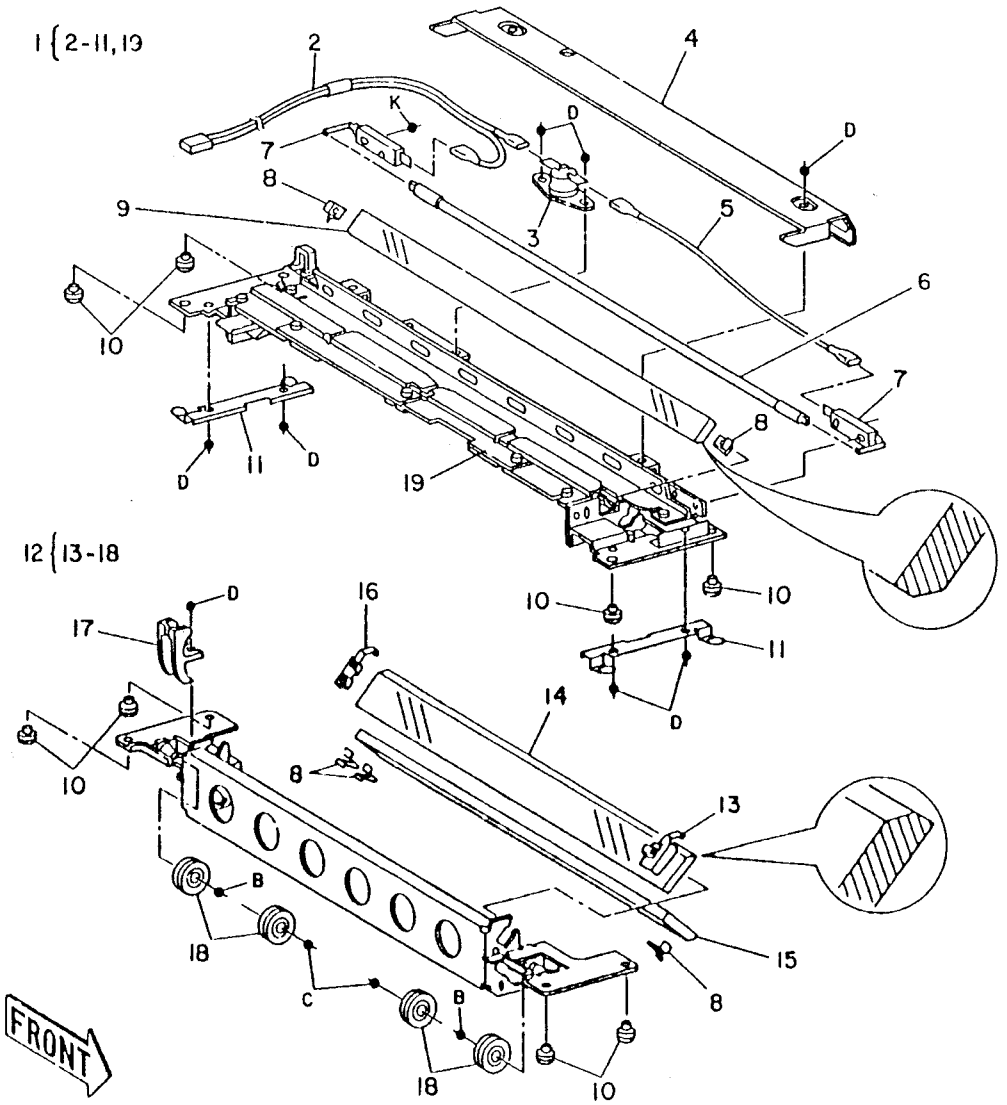

8-8-005-0

PL 2.4A Lens Drive (1 of 2)

Item	Part	Description
1	127K94040	LENS MOTOR (MOT06-2)
2	--	PLATE (NOT SPARED)
3	12E91850	MIRROR CABLE (REP 6.19)
4	9E26811	MIRROR CABLE SPRING
5	41K91601	R/E CARRIAGE ASSEMBLY
6	--	R/E CARRIAGE (P/O ITEM 5)
7	--	MIRROR CARRIAGE SPRING (P/O ITEM 6)
8	9E90750	MIRROR CLIP
9	62E91660	UPPER R/E MIRROR (REP 6.14) (ADJ 6.4)
10	62E91670	LOWER R/E MIRROR (REP 6.14) (ADJ 6.4)
11	--	PAD (P/O ITEM 5)
12	6E81970	SHAFT
13	11K91211	LEVER ASSEMBLY
14	63E90910	SLIDE TAPE
15	62E91680	FIXED MIRROR (REP 6.14) (ADJ 6.4)
16	--	SHIELD (NOT SPARED)

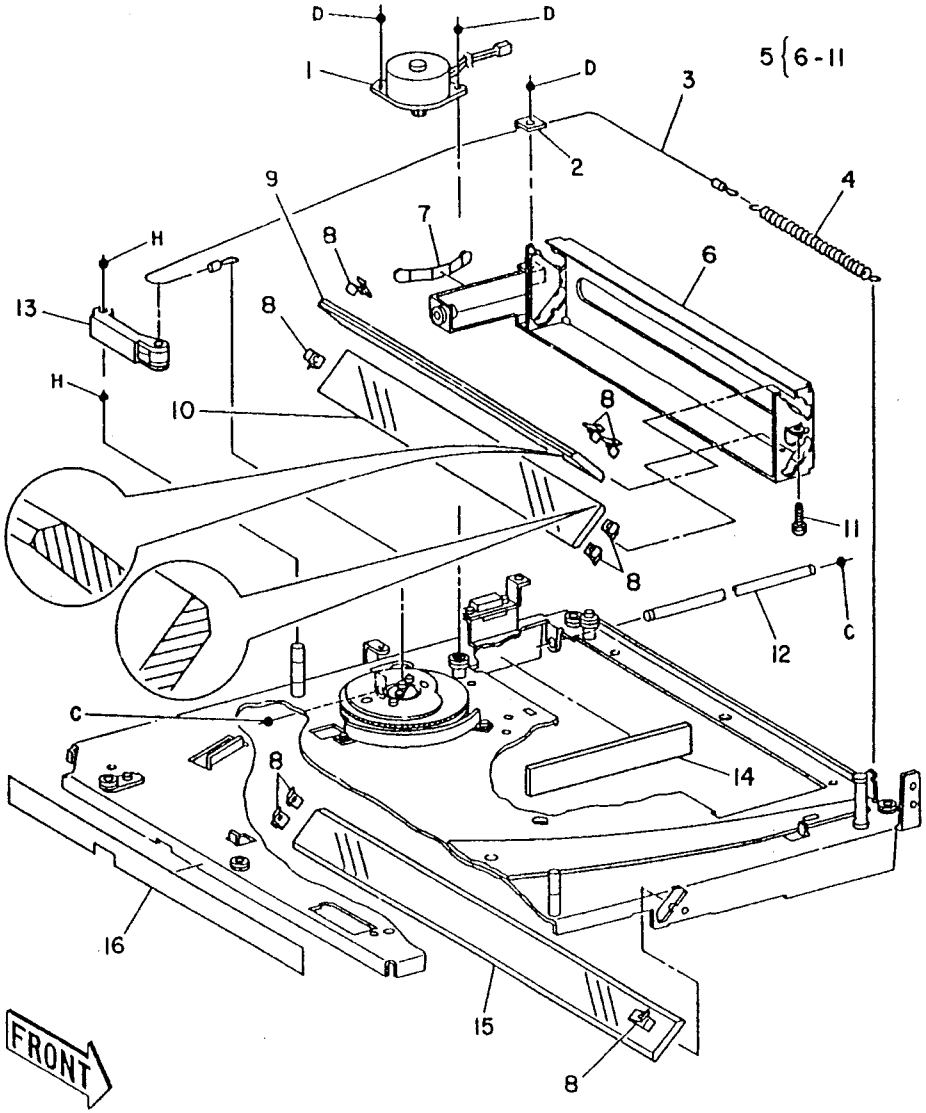

8-8-006-0

PL 2.4B Lens Drive (2 of 2)

Item	Part	Description
1	55K90852	LENS SHIELD
2	12E91841	LENS DRIVE CABLE (REP 6.12)
3	55E92551	REAR LIGHT SHIELD
4	9E26821	LENS CABLE SPRING
5	--	SHIELD (NOT SPARED)
6	--	PAD (NOT SPARED)
7	--	SHIELD (NOT SPARED)
8	15E84990	SENSOR COVER
9	130K93560	EXPOSURE SENSOR (Q06-355) (REP 6.11) (CQ 1.3)
10	107K90391	LENS HOME SENSOR (QO6-330)
11	55E92561	FRONT LIGHT SHIELD
12	22E93380	SHIELD ROLLER
13	68E960	BRACKET
14	9E26830	FRONT SHIELD SPRING
15	6E81990	SHIELD SHAFT
16	130K93320	DOCUMENT SIZE SENSOR 1 (Q06-360) DOCUMENT SIZE SENSOR 2 (QO6-362)

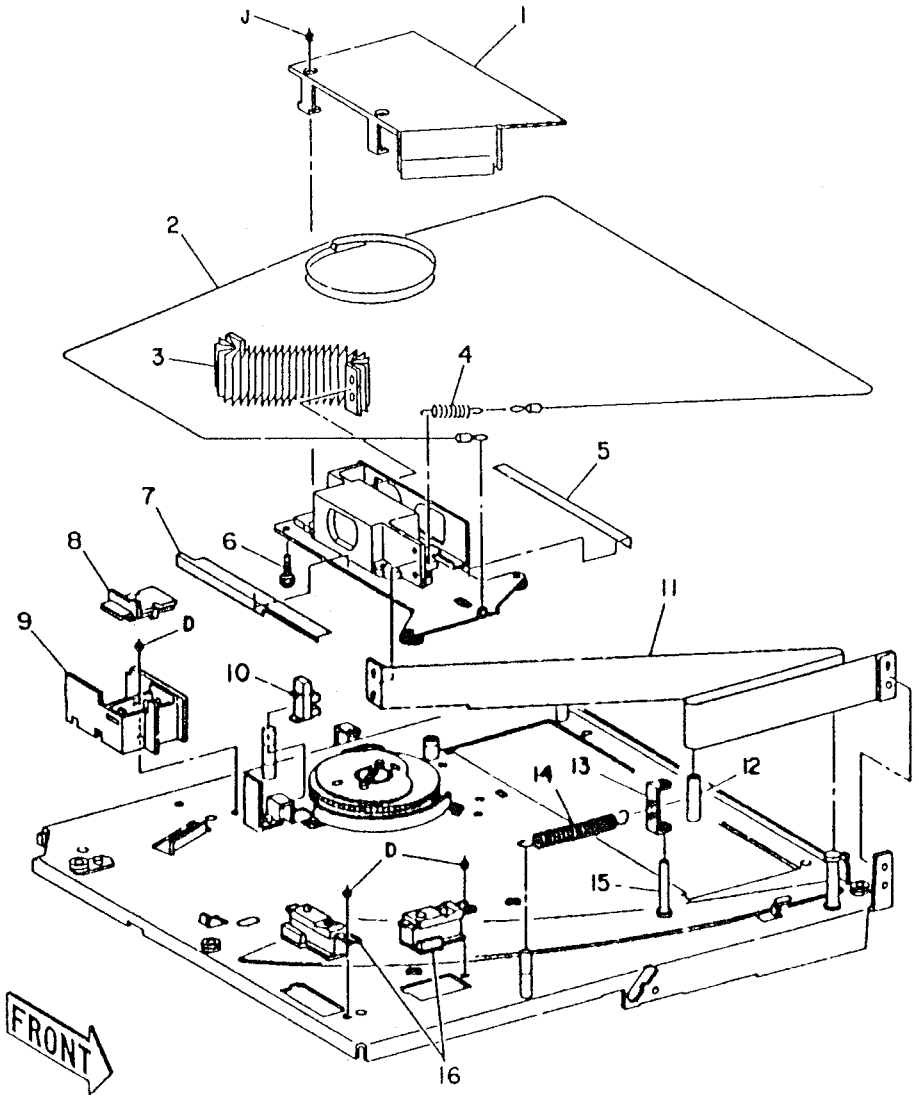

8-8-007-0

PL 3.1 Tray 1 Elevator Motor

Item	Part	Description
1	--	TRAY 1 ASSEMBLY (SEE PL 3.2, PL 3.3)
2	3E92640	STOPPER
3	10K90070	SLIDE ASSEMBLY
4	140K/1320	TRAY 1 FILTER PWB
5	91E68340	INSTRUCTION LABEL
6	91E67490	MAX LABEL
7	91E68280	SIZE LABEL
8	92E94610	ARROW LABEL
9	127K94461	TRAY 1 ELEVATOR MOTOR ASSEMBLY (REP 7.1) (MOT07-005)
10	110K91911	TRAY 1 SIZE SENSOR (Q07-304 SIZE 1) (Q07-306 SIZE 2) (Q07-307 SIZE 3) (Q07-308 SIZE 4)
11	92E300	PAPER SIZE LABEL
12	108E90850	FUSE (400MA)

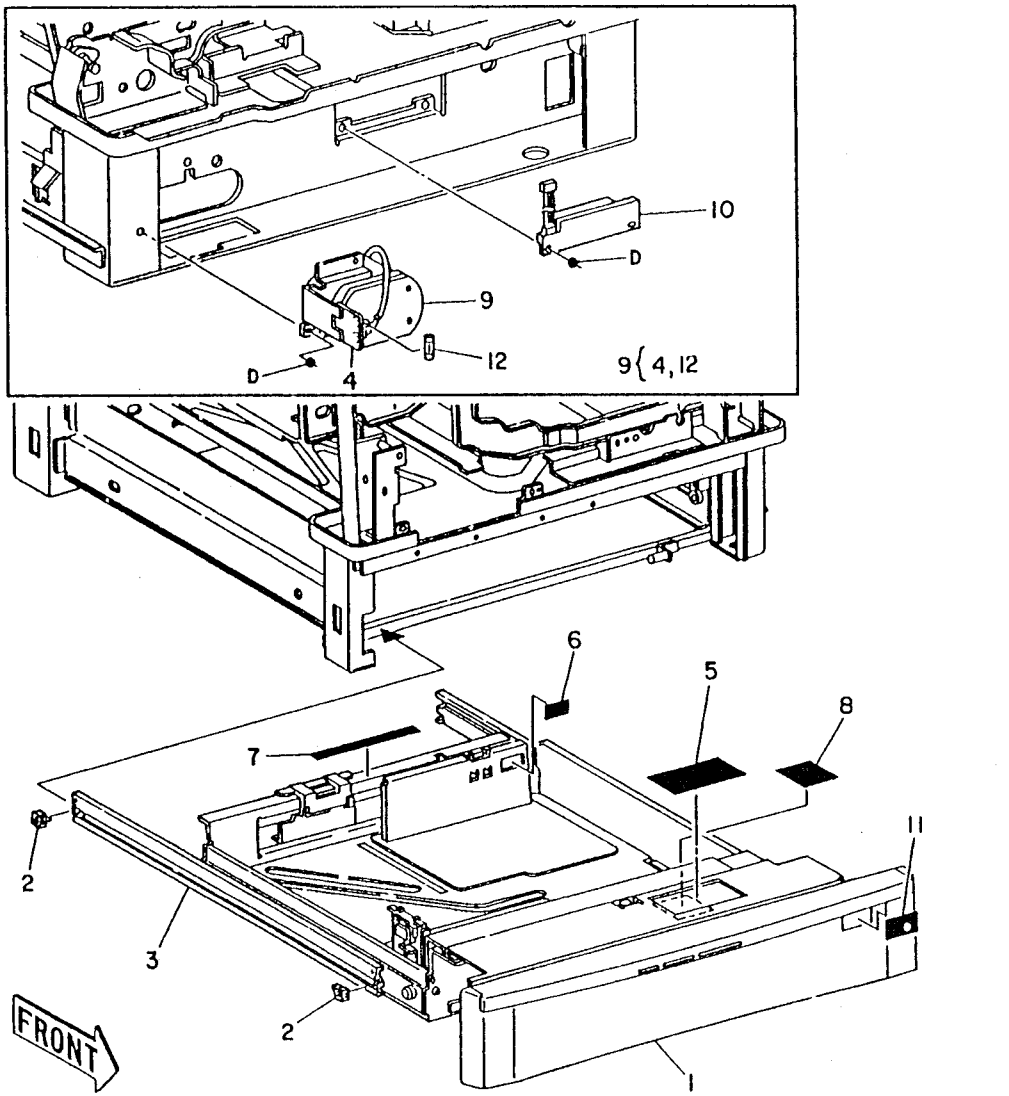

8-8-008-0

PL 3.2 Tray 1 Assembly

Item	Part	Description
1	2E42430	SNAP PANEL (TRAY 1)
2	--	COVER BRACKET (P/O ITEM 3)
3	2K38420	TRAY 1 COVER ASSEMBLY (REP 7.2)
4	48E90090	HANDLE
5	2E38035	TRAY 1 FRONT COVER

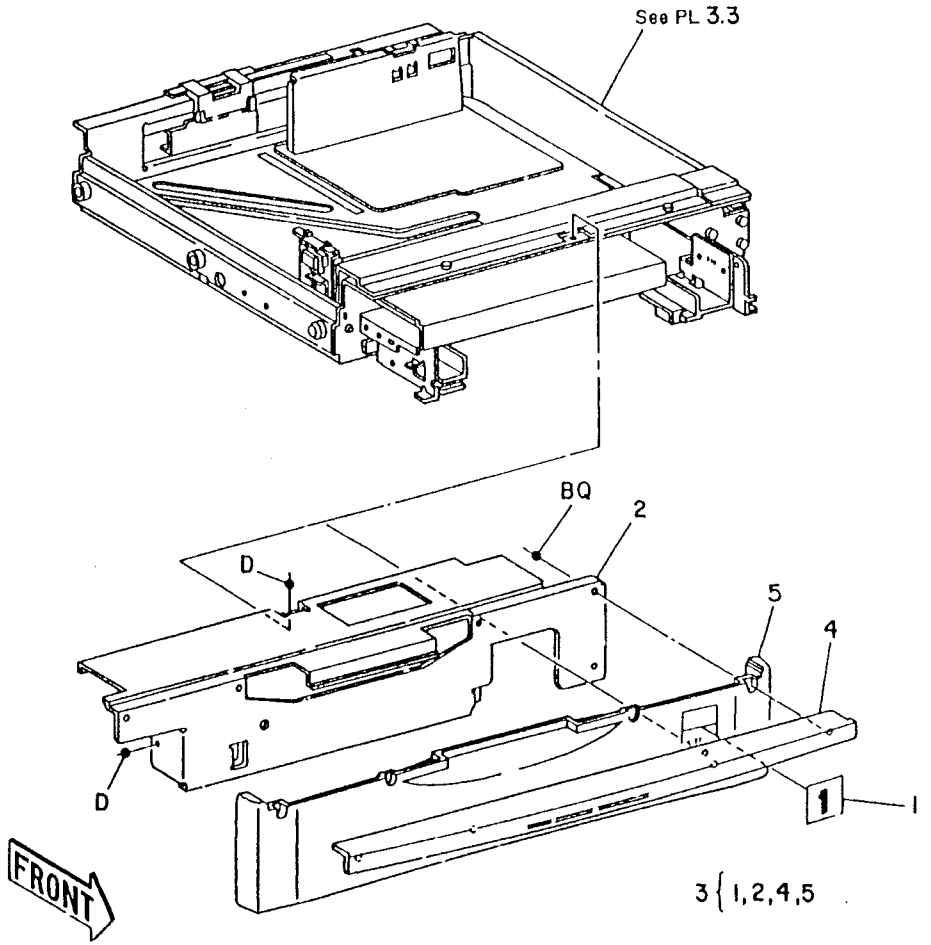

8-8-009-0

PL 3.3 Tray 1 Module Assembly

Item	Part	Description
1	48K280	TRAY 1 MODULE ASSEMBLY
2	3E20372	LEVER LOCK
3	3E80910	KNOB
4	11K91150	LEVER ASSEMBLY
5	9E26970	SPRING
6	--	PAPER SIDE GUIDE
7	38K92540	PAPER END GUIDE
8	--	PLATE (P/O ITEM 1)
9	--	PLATE (P/O ITEM 1)
10	15K94810	LOWER PLATE ASSEMBLY
11	19E93220	LOWER PAD
12	--	PLATE (P/O ITEM 1)
13	38E93760	FRONT PAPER GUIDE
14	68K91160	RH BRACKET ASSEMBLY
15	32E91250	WIRE GUIDE
16	20E17410	PULLEY
17	12E91900	TRAY 1 CABLE (REP 7.3, 7.4)
18	--	PULLEY (P/O ITEM 1)
19	13P60897	BEARING
20	--	TRAY 1 SHAFT ASSEMBLY (P/O ITEM 1)
21	3K92220	RH STOPPER ASSEMBLY (ADJ 7.1)
22	3K91860	LH STOPPER ASSEMBLY (ADJ 7.1)
23	9E84690	SPRING
24	--	GUIDE BRACKET (P/O ITEM 1)
25	120E92100	PAPER GUIDE ADJUSTER
26	3E80930	STOPPER
27	--	CUSHION
28	9E44440	FLEXURE SPRING ASSEMBLY
29	105E92520	STATIC ELIMINATOR

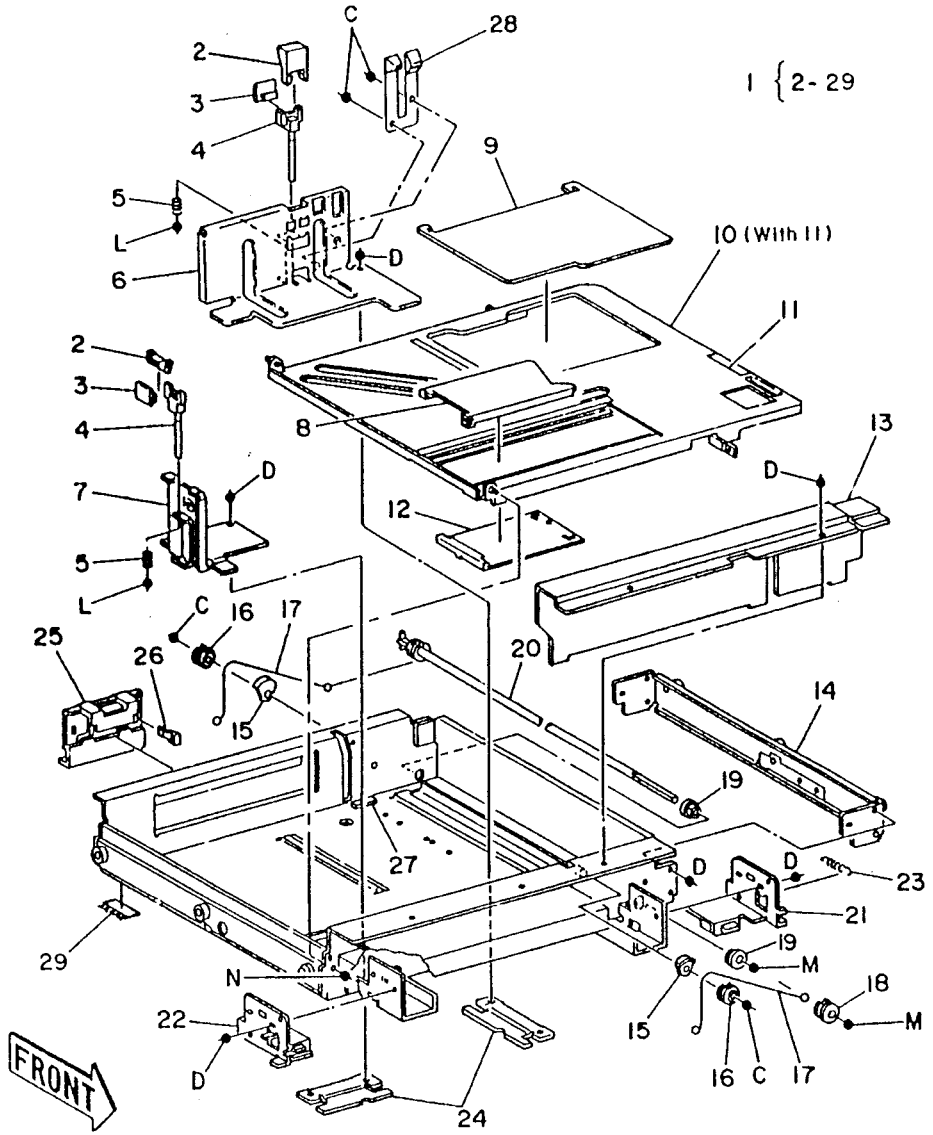

PL 3.4A Tray 2,3 Assembly (1 of 2)

Item	Part	Description
1	26E83671	STUD
2	22E93090	TRAY ROLLER
3	14E93410	FRONT SPACER
4	--	RAIL GUIDE (NOT SPARED)
5	110K91911	SIZE SENSOR (Q07-320 TRAY 2 SIZE 1) (Q07-321 TRAY 2 SIZE 2) (Q07-322 TRAY 2 SIZE 3) (Q07-323 TRAY 2 SIZE 4) (Q07-335 TRAY 3 SIZE 1) (Q07-336 TRAY 3 SIZE 2) (Q07-337 TRAY 3 SIZE 3) (Q07-338 TRAY 3 SIZE 4)
6	68K91712	TRAY 2/3 COVER ASSEMBLY
7	3E80510	HANDLE
8	9E84690	SPRING
9	16E90662	CASSETTE STOPPER (ADJ 7.2)
10	--	INSERT (P/O ITEM 6) (ADJ 7.2)
11	--	PLATE (P/O ITEM 6) (ADJ 7.2)
12	--	TRAY 2/3 FRONT COVER (P/O ITEM 6)
13	68K91721	LINK BRACKET ASSEMBLY
14	91E69120	TRAY 3 LABEL
-	91E69110	TRAY 2 LABEL
15	1K84592	TRAY RAIL ASSEMBLY
16	--	TRAY RAIL (P/O ITEM 15)
17	14E93421	SPACER
18	14E93431	RH SPACER
19	14E93441	LH SPACER
20	68K91721	LINK BRACKET
21	105E92520	STATIC ELIMINATOR

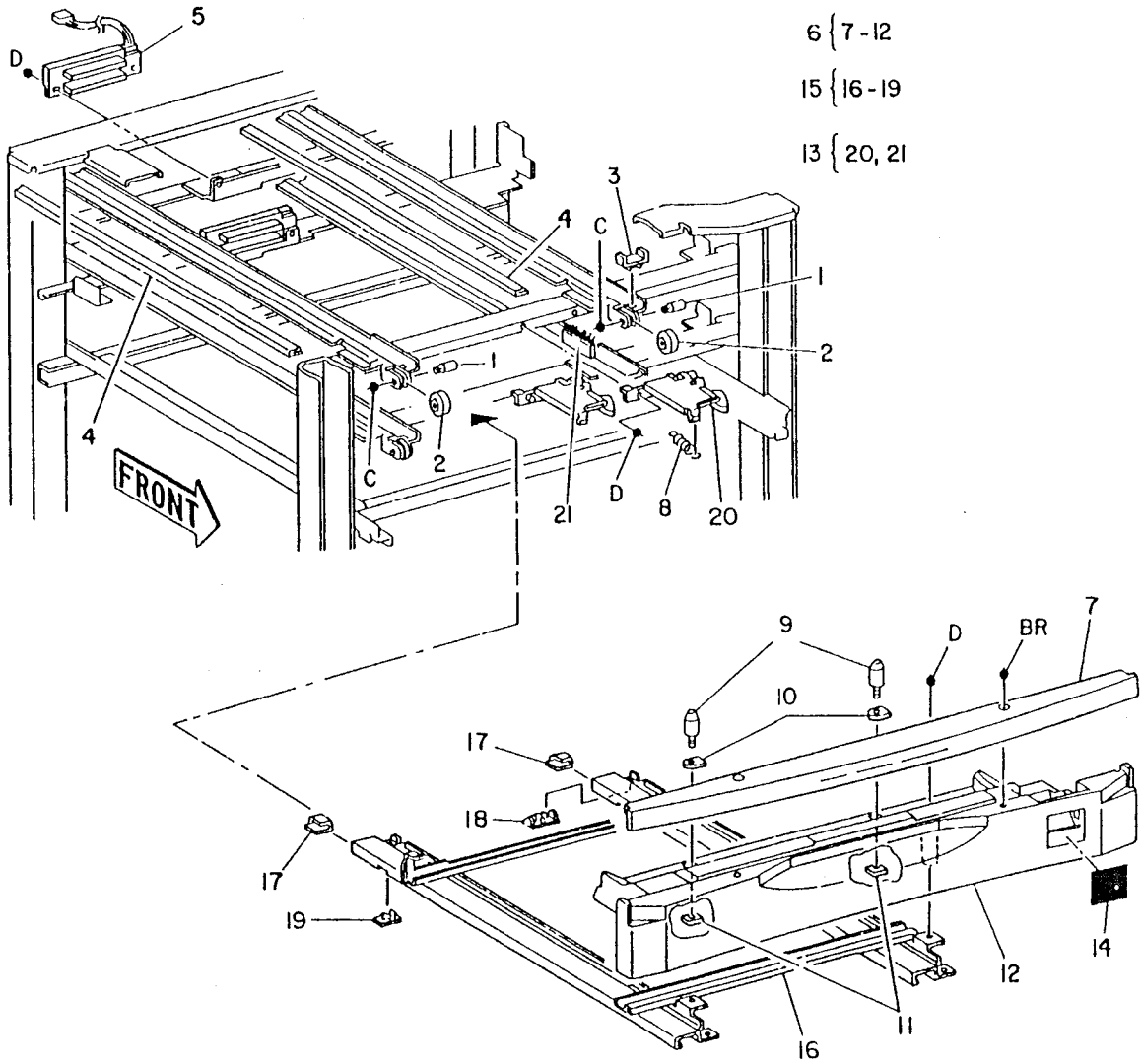

8-8-011-0

PL 3.4B Tray 2,3 Assembly (2 of 2)

Item	Part	Description
1	50K81415	PAPER CASSETTE ASSEMBLY
2	--	ARROW LABEL
3	19E93220	LOWER PAD
4	--	LOWER PLATE (P/O ITEM 1)
5	--	PAPER SIDE GUIDE (P/O ITEM 1)
6	--	BEARING (P/O ITEM 1)
7	--	SPACER (P/O ITEM 1)
8	--	SPRING (P/O ITEM 1)
9	--	SIDE LEVER (P/O ITEM 1)
10	--	SIDE PIN (P/O ITEM 1)
11	10E90271	PAPER GUIDE ADJUSTER
12	--	SHAFT (P/O ITEM 1)
13	--	BRACKET (P/O ITEM 1)
14	--	CASSETTE (P/O ITEM 1)
15	--	END GUIDE (P/O ITEM 22)
16	--	END GUIDE INSERT (P/O ITEM 22)
17	--	END GUIDE LEVER (P/O ITEM 22)
18	--	SPRING (P/O ITEM 22)
19	3E80620	STOPPER
20	3E80630	STOPPER
21	--	STOPPER KIT
22	600K90350	END GUIDE KIT
23	92E94661	LABEL
24	--	INSTRUCTION LABEL (P/O ITEM 1)
25	600K34810	PAPER SIDE GUIDE KIT
26	91E67490	MAX LABEL
27	91E67600	SIZE LABEL

1 {2-18, 24
21 {19, 20, Item 2, 26 on PL 3.3
22 {15-18
25 {5-12, 26

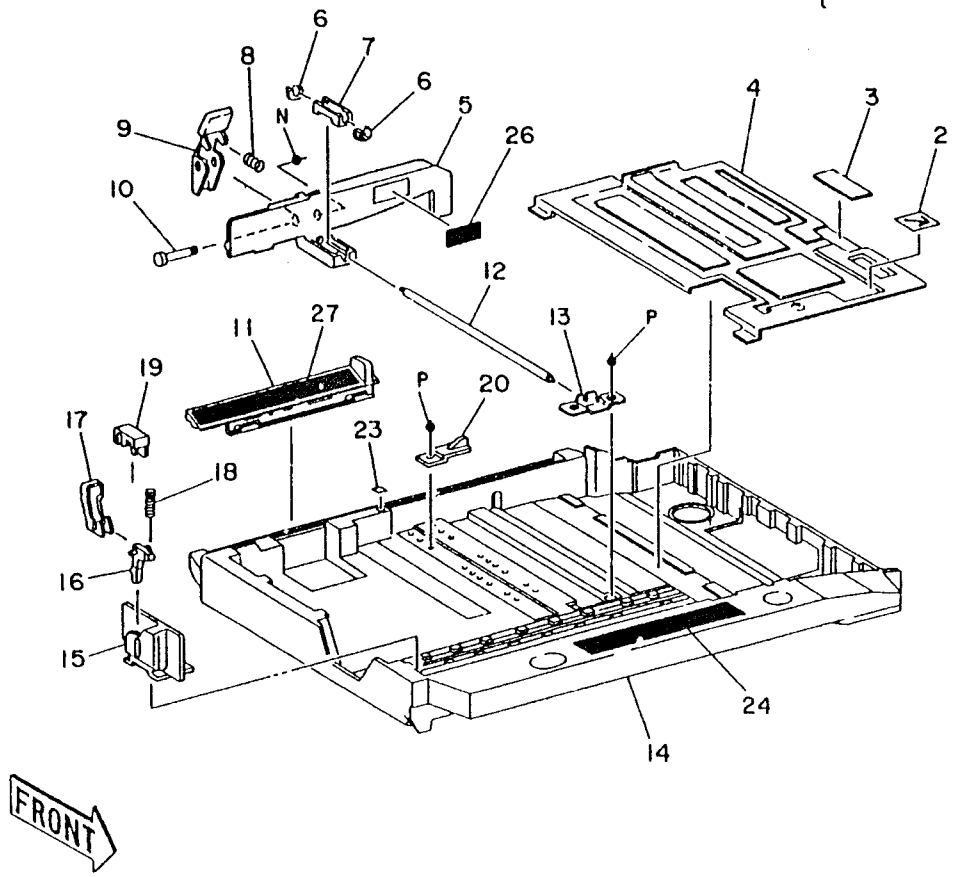

8-8-012-0

PL 3.5 Tray 4 Assembly

Item	Part	Description
1	--	TRAY 4 COVER ASSEMBLY (REP 7.2) (SEE PL 3.7)
2	92E300	PAPER SIZE LABEL
3	--	PAPER LOADING LABEL (SEE PL 17.2A)
4	91E67490	MAX LABEL
5	--	SIZE LABEL
6	3E92640	STOPPER
7	10K90070	TRAY 4 SLIDE

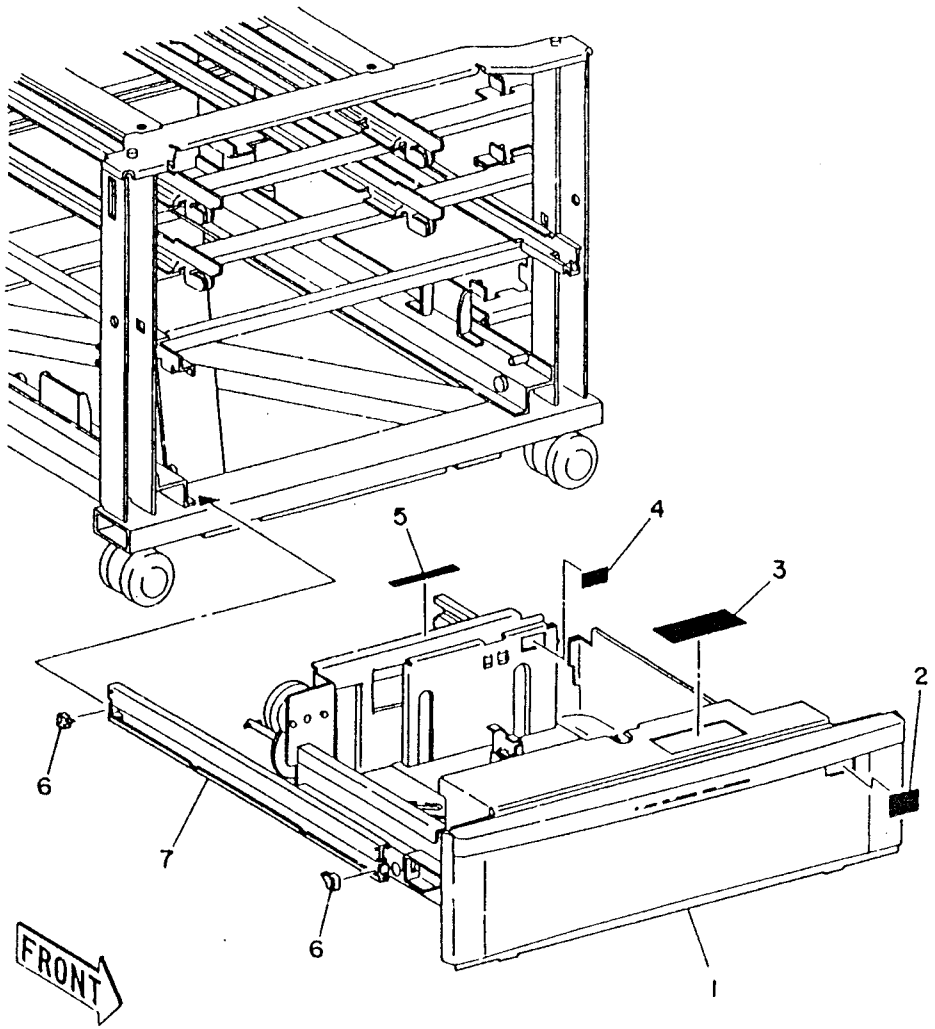

8-8-013-0

PL 3.6 Tray 4 Module

Item	Part	Description
1	15K94721	LOWER PLATE
2	19E93220	LOWER PAD
3	--	PLATE (NOT SPARED)
4	--	PLATE (NOT SPARED)
5	3E20372	LEVER LOCK
6	3E80910	KNOB
7	11K91290	LEVER ASSEMBLY
8	--	PAPER SIDE GUIDE (P/O ITEM 29)
9	9E26970	SPRING
10	--	PLATE (P/O ITEM 29)
11	--	PAPER END GUIDE (P/O ITEM 29)
12	3E80930	STOPPER
13	120E92100	PAPER GUIDE ADJUSTER
14	20E17410	PULLEY
15	12E91890	LONG CABLE (REP 7.5, 7.6)
16	32E91250	WIRE GUIDE
17	12E91910	SHORT CABLE (REP 7.5, 7.6)
18	19K90650	BRAKE ASSEMBLY
19	3E80700	DAMPER
20	20E93120	CABLE PULLEY
21	6K92670	TRAY 4 SHAFT ASSEMBLY
22	13E90840	BEARING
23	68K91000	RH BRACKET ASSEMBLY
24	68K91010	LH BRACKET ASSEMBLY
25	9E27150	SPRING
26	--	GUIDE BRACKET (P/O ITEM 29)
27	--	STOPPER KIT
28	105E92520	STATIC ELIMINATOR
29	50K13291	TRAY 4 MODULE ASSEMBLY
30	9E44440	FLEXURE SPRING ASSEMBLY

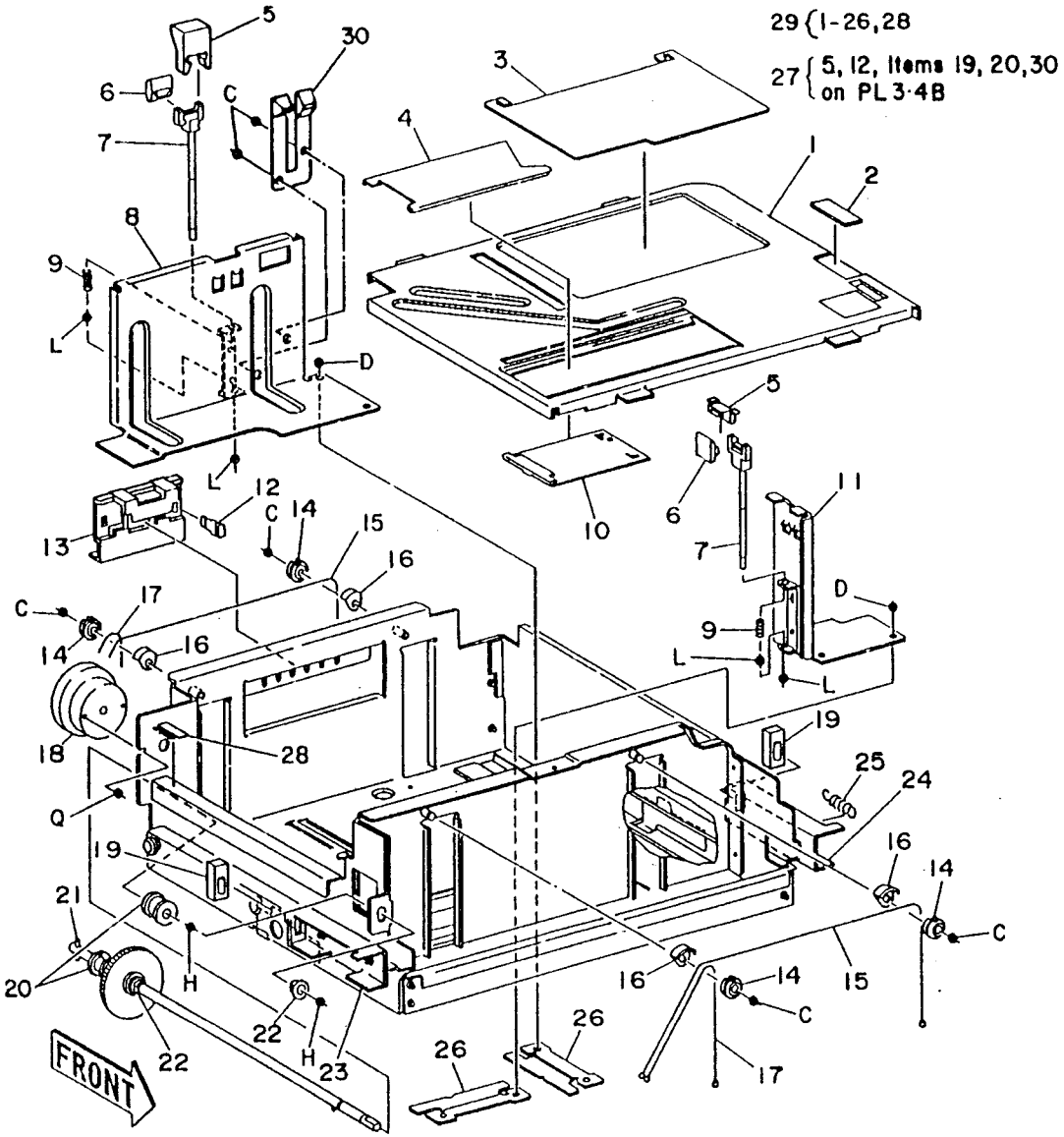

PL 3.7 Tray 4 Module Covers

Item	Part	Description
1	24K90540	LH PLATE
2	24K90550	RH PLATE
3	48E90090	TRAY 4 HANDLE
4	2K55380	TRAY 4 COVER ASSEMBLY (REP 7.2)
5	92E94610	LABEL
6	--	BRACKET (NOT SPARED)
7	2E38083	TRAY 4 COVER
8	19E21270	PAD

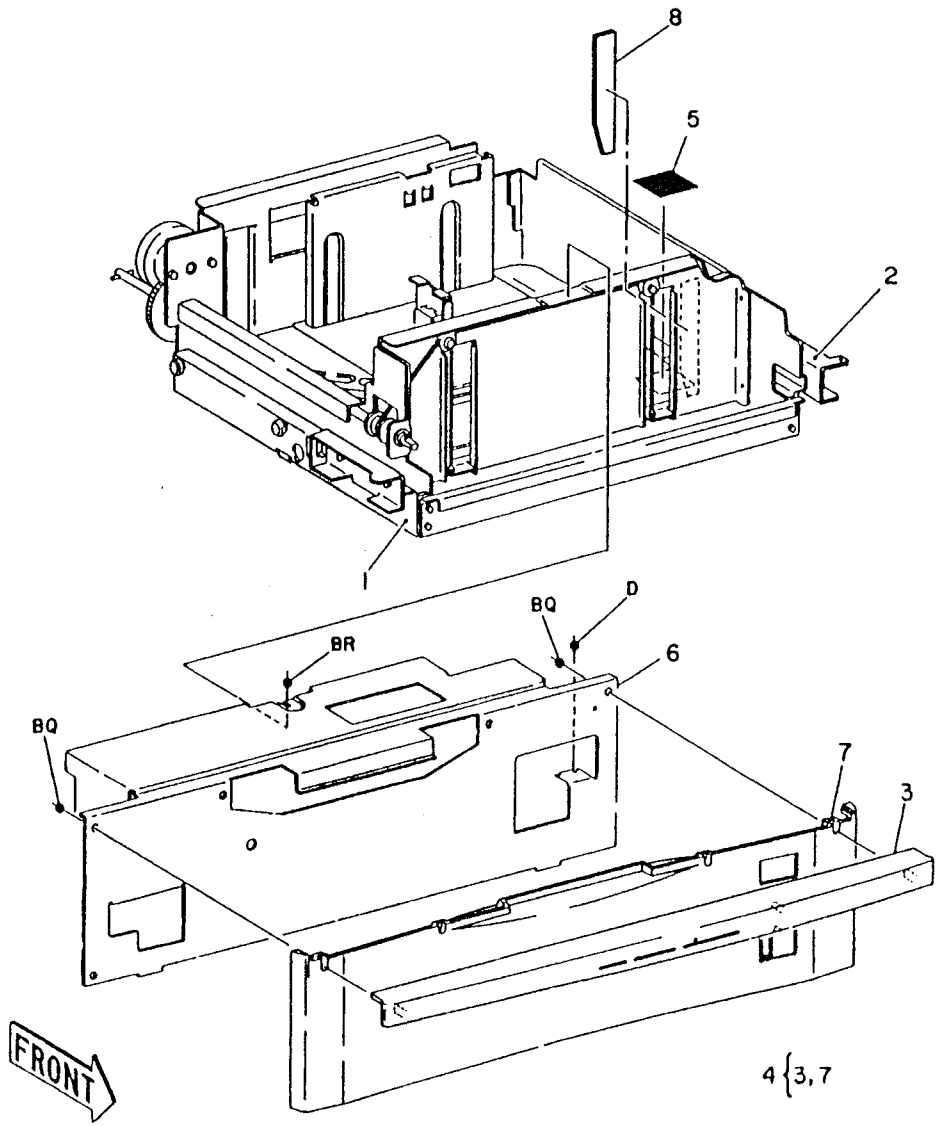

8-8-015-0

PL 3.8 Tray 4 Elevator Motor and Feed Motor

Item	Part	Description
1	127K94470	TRAY 4 ELEVATOR MOTOR (MOT07-035)
2	127K94590	FEED MOTOR 4 (MOT08-040))
3	4E93290	DAMPER
4	110K91911	TRAY 4 SIZE SENSOR (Q07-350 SIZE 1) (Q07-351 SIZE 2) (Q07-352 SIZE 3) (Q07-353 SIZE 4)
5	68K92130	TRAY 4 DRIVE GEAR ASSEMBLY
6	7E82540	GEAR (28T)
7	68K90870	TRAY 4 DRIVE BRACKET
8	9E84980	SPRING
9	13E93370	BEARING
10	7E82550	GEAR (43/23T)
11	7K91550	GEAR ASSEMBLY (29T)
12	63K91030	GEAR BRACKET ASSEMBLY
13	140K71320	TRAY 4 FILTER PWB
14	108E90850	FUSE (250V 4A)

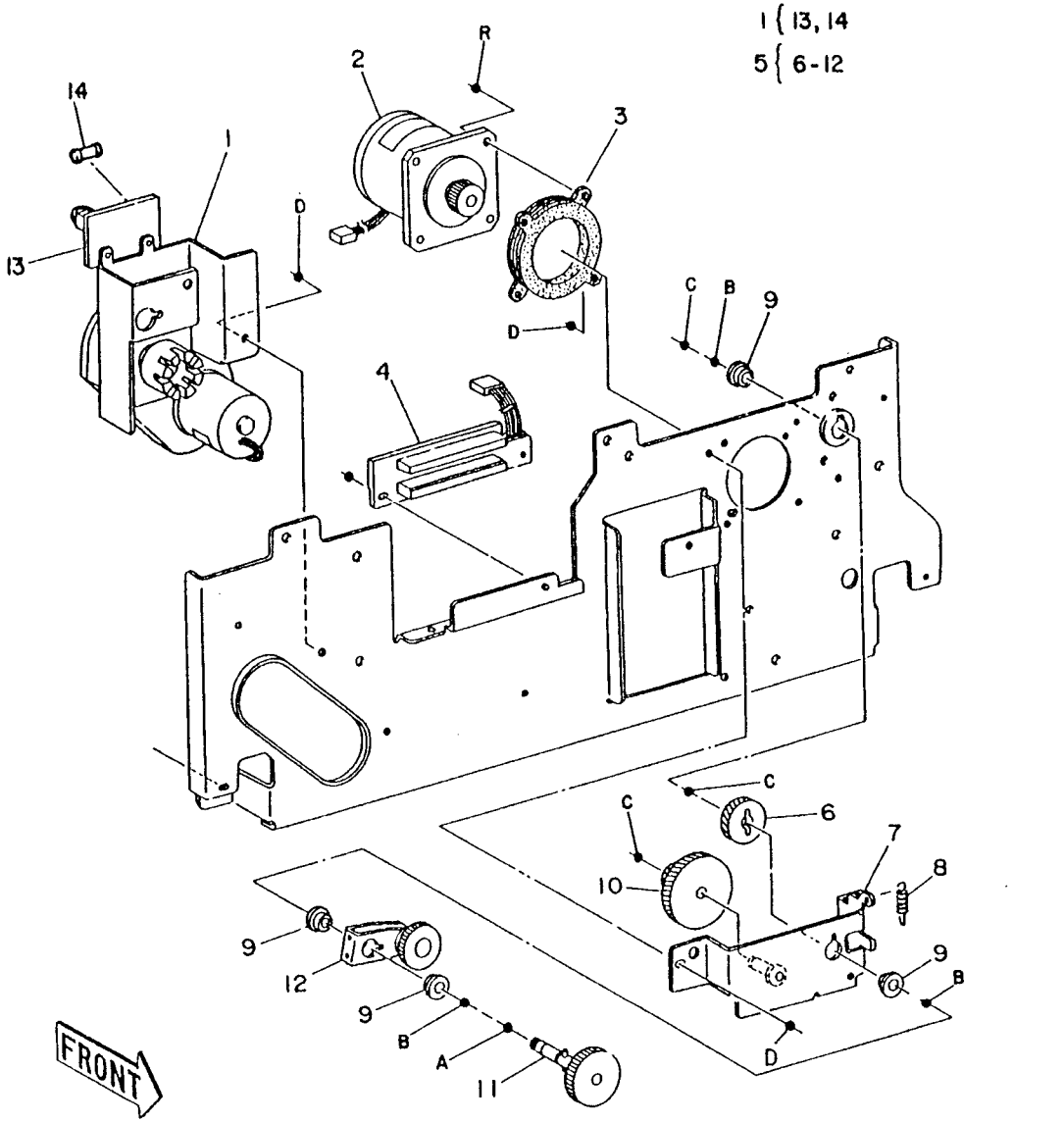

8-8-016-0

PL 3.9A HCF Covers and Latch Assembly (1 of 2)

Item	Part	Description
1	--	HCF DOOR HINGE BRACKET
2	2K64323	HCF DOOR
3	3E18371	LATCH HANDLE
4	--	LATCH LEVER
5	9E84660	SPRING
6	--	LATCH BRACKET
7	3E18382	LATCH
8	--	RETAINER BRACKET
9	--	LATCH SHAFT
10	--	LATCH ROD
11	--	FRONT TENSION PLATE
12	--	REAR TENSION PLATE
13	110E851	DOOR INTERLOCK SWITCH (S07-370)
14	9E44732	SENSOR CLIP
15	9P90876	LATCH SPRING
16	2E37985	INNER COVER
17	2K64313	HCF COVER
18	--	PLATE SUPPORT (NOT SPARED)

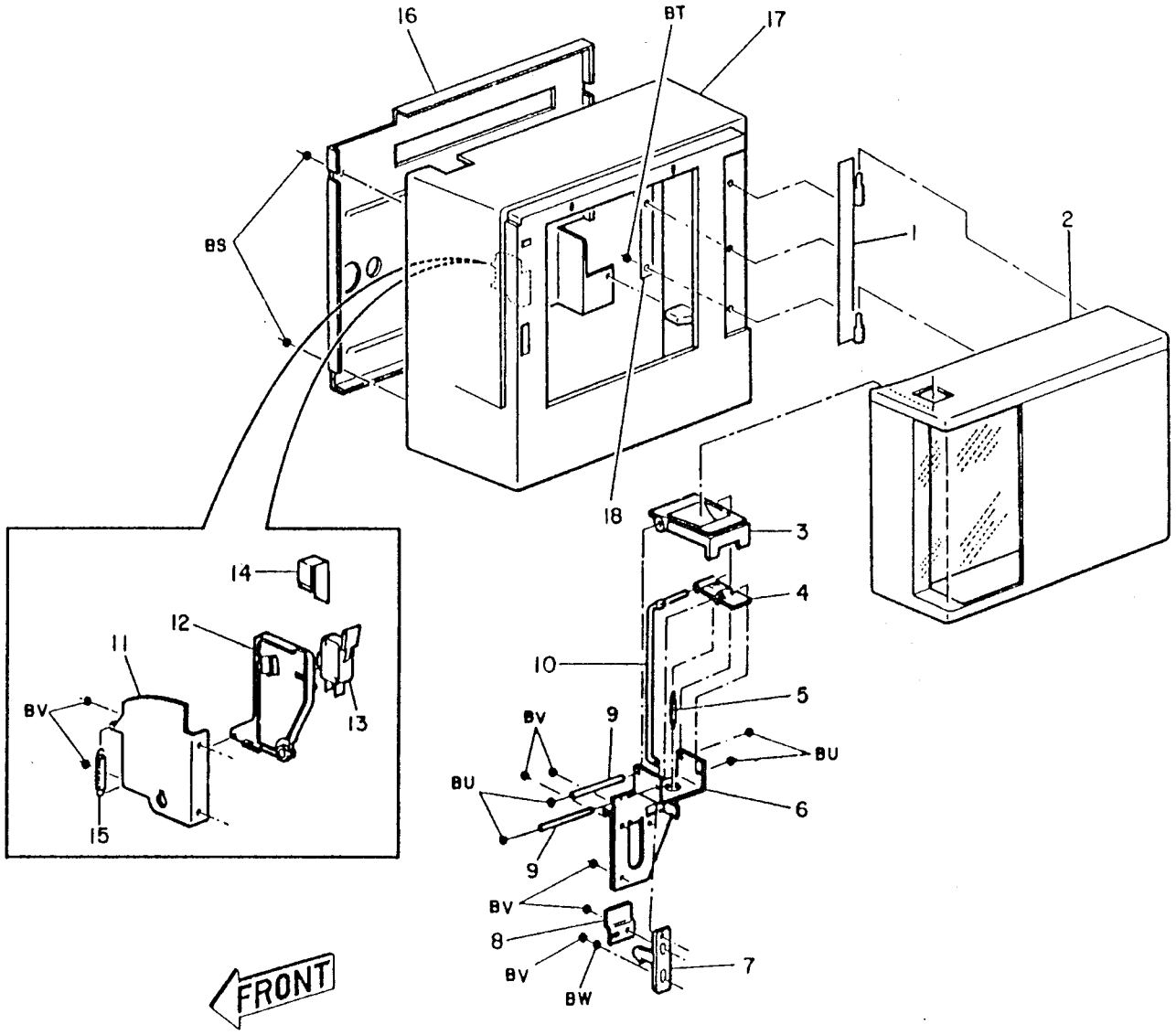

8-8-096-0

PL 3.10 HCF PWB, HCF Feed Motor

Item	Part	Description
1	--	UPPER TIE PLATE (NOT SPARED)
2	9E44971	LEAF SPRING
3	--	LOWER TIE PLATE (NOT SPARED)
4	--	REAR CHAIN GUARD (NOT SPARED)
5	--	REAR REGISTRATION PLATE (NOT SPARED)
6	127K9225	HCF FEED MOTOR (MOT08-050)
7	4E93290	MOTOR DAMPER
8	7E16481	SPROCKET
9	--	PWB MOUNTING PLATE (NOT SPARED)
10	140K51182	HCF PWB (WITH TAG 3)
11	--	FRONT CHAIN GUARD (NOT SPARED)
12	--	HCF COVER SUPPORT (NOT SPARED)
13	19E93220	PAD
14	19E10462	PAD

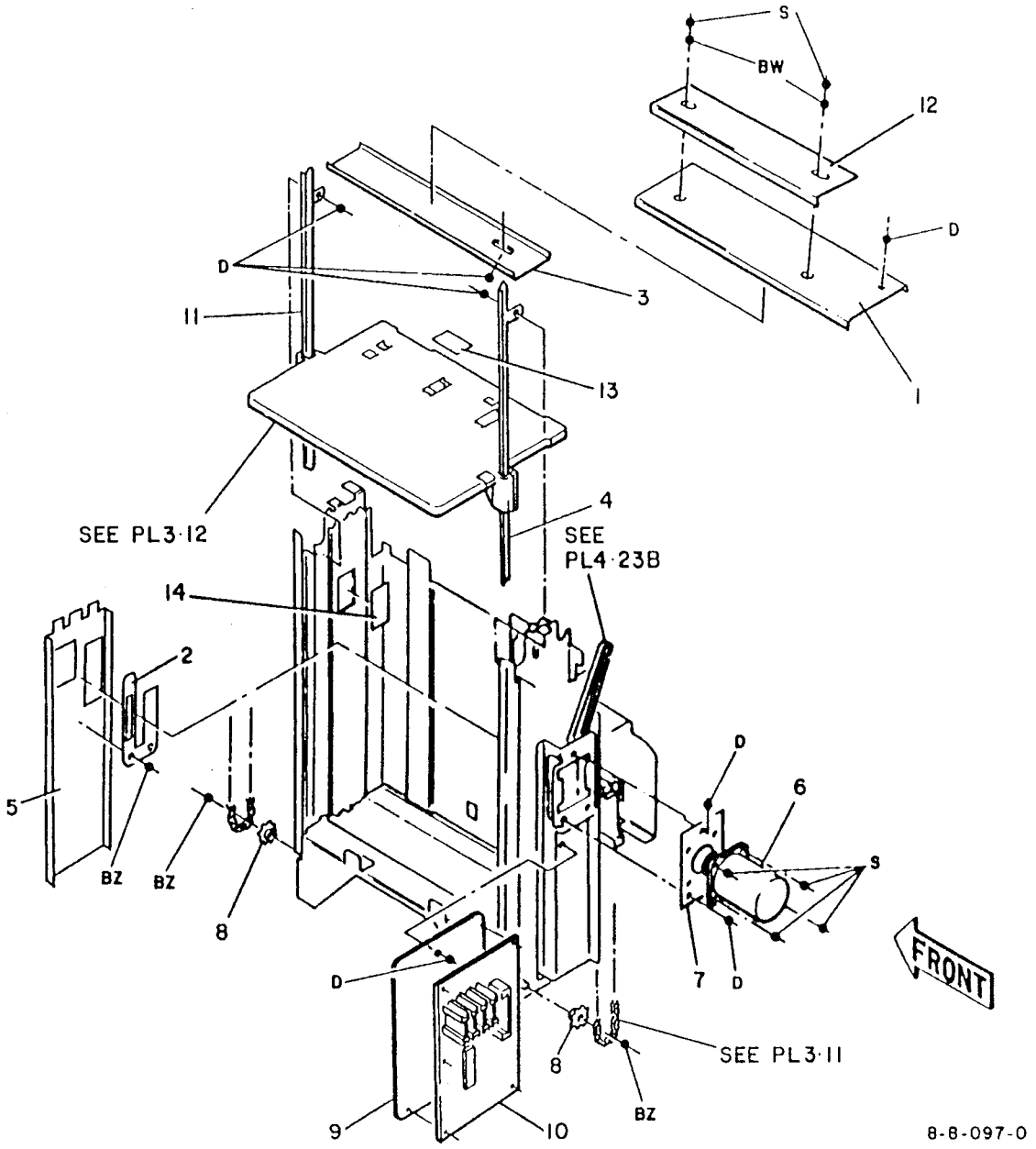

PL 3.11 HCF Tray Elevator Motor

Item	Part	Description
1	107K90391	HCF NUDGE UP SENSOR (Q07-363)
2	--	BEARING SUPPORT (NOT SPARED)
3	413W30854	BEARING
4	7K5893	WORM WHEEL
5	14E19663	SPACER
6	6E26914	SOCKET SHAFT
7	7K5917	WORM/PULLEY
8	23E6410	ELEVATOR DRIVE BELT (90T)
9	127E7062	ELEVATOR MOTOR (MOT07-045)
10	6E26921	GEAR SHAFT
11	7E16481	SPROCKET
12	9E34491	SPRING
13	23K460	CHAIN

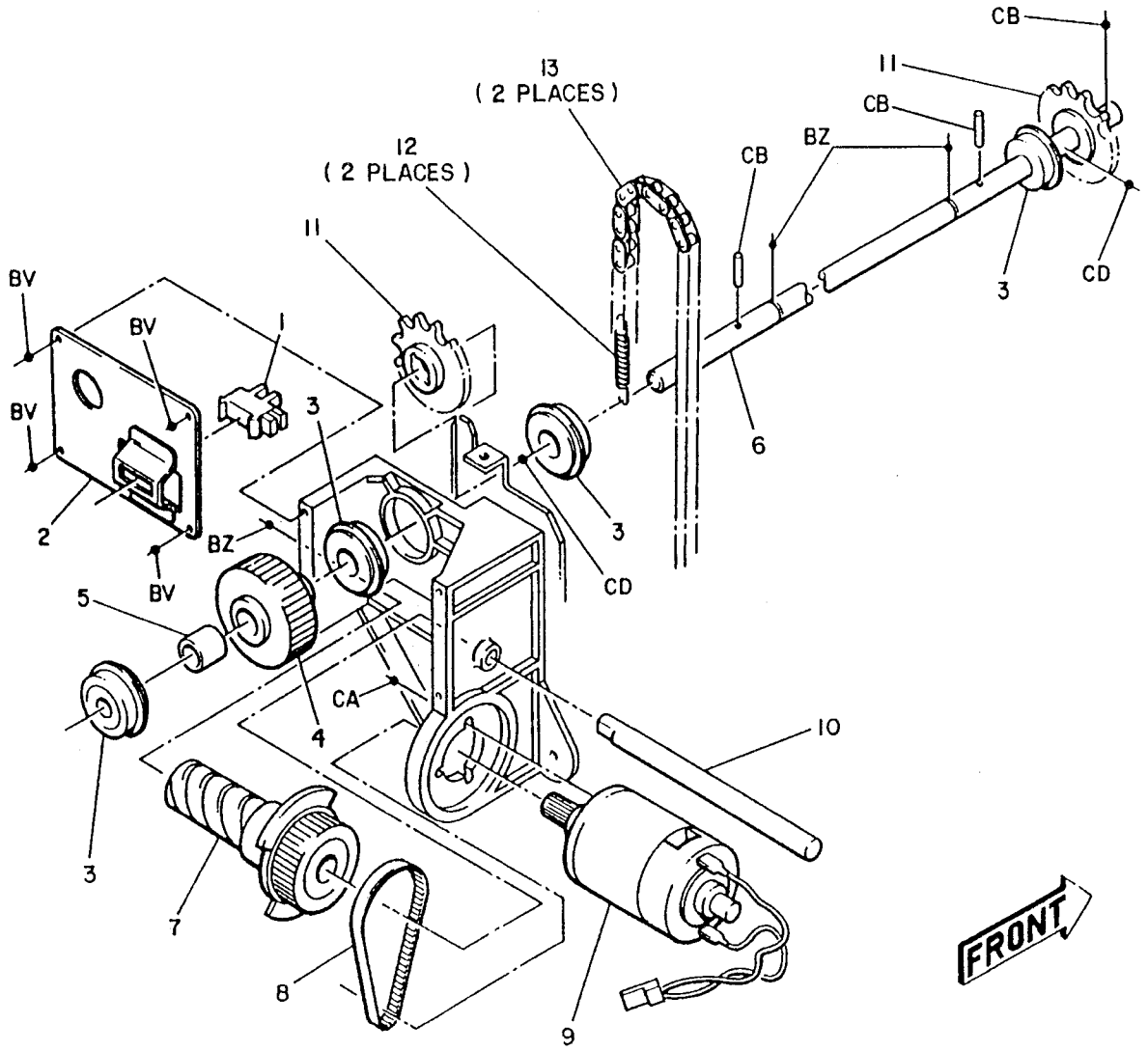

8-8-098-0

PL 3.12 HCF Tray

Item	Part	Description
1	--	HCF TRAY
2	--	REAR TRAY SUPPORT
3	10E2914	REAR SLIDER
4	10E2904	FRONT SLIDER
5	--	FRONT TRAY SUPPORT

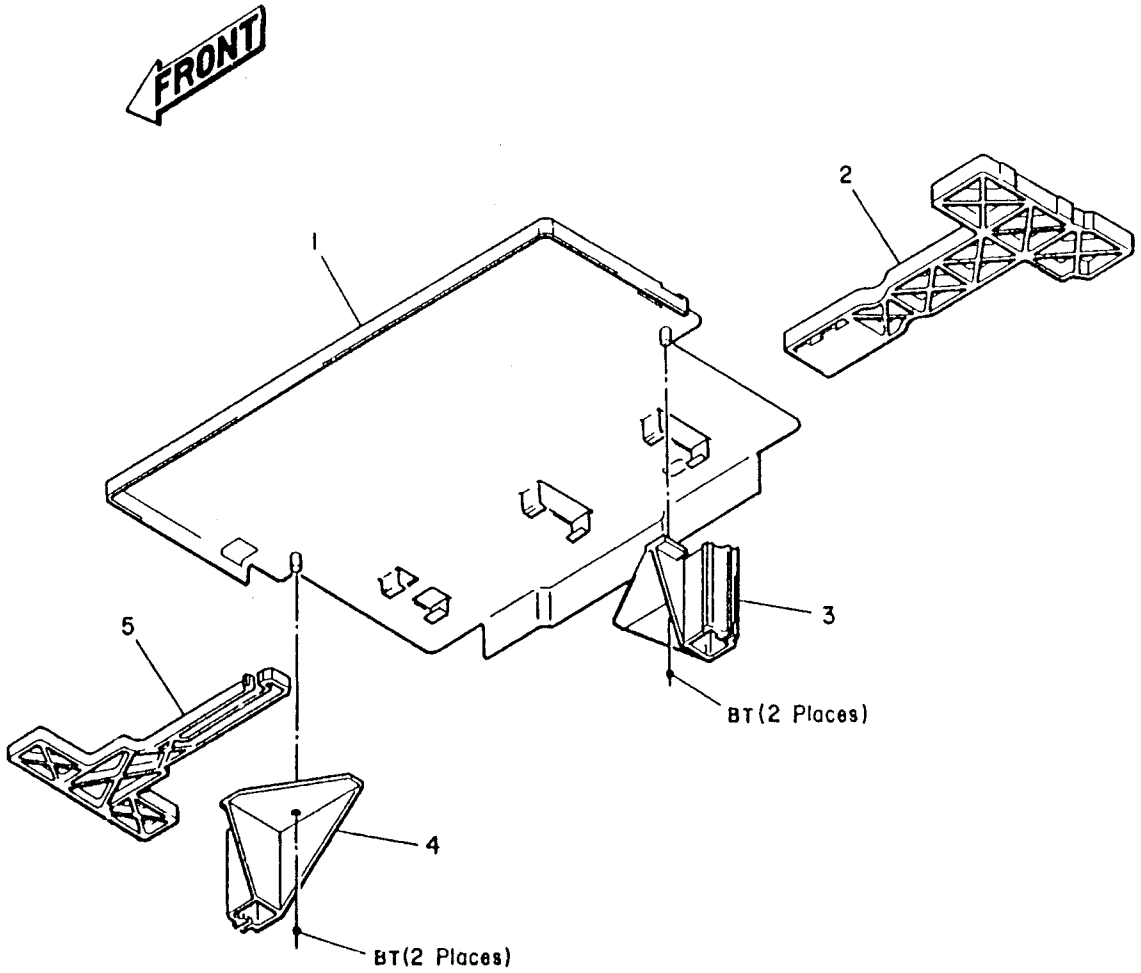

8-8-099-0

PL 3.13 HCF Slides

Item	Part	Description
1	130K91180	HCF DOWN SENSOR (Q07-364)
2	10E2942	REAR SLIDE
3	10E2932	FRONT SLIDE
4	--	HCF SUPPORT (NOT SPARED)

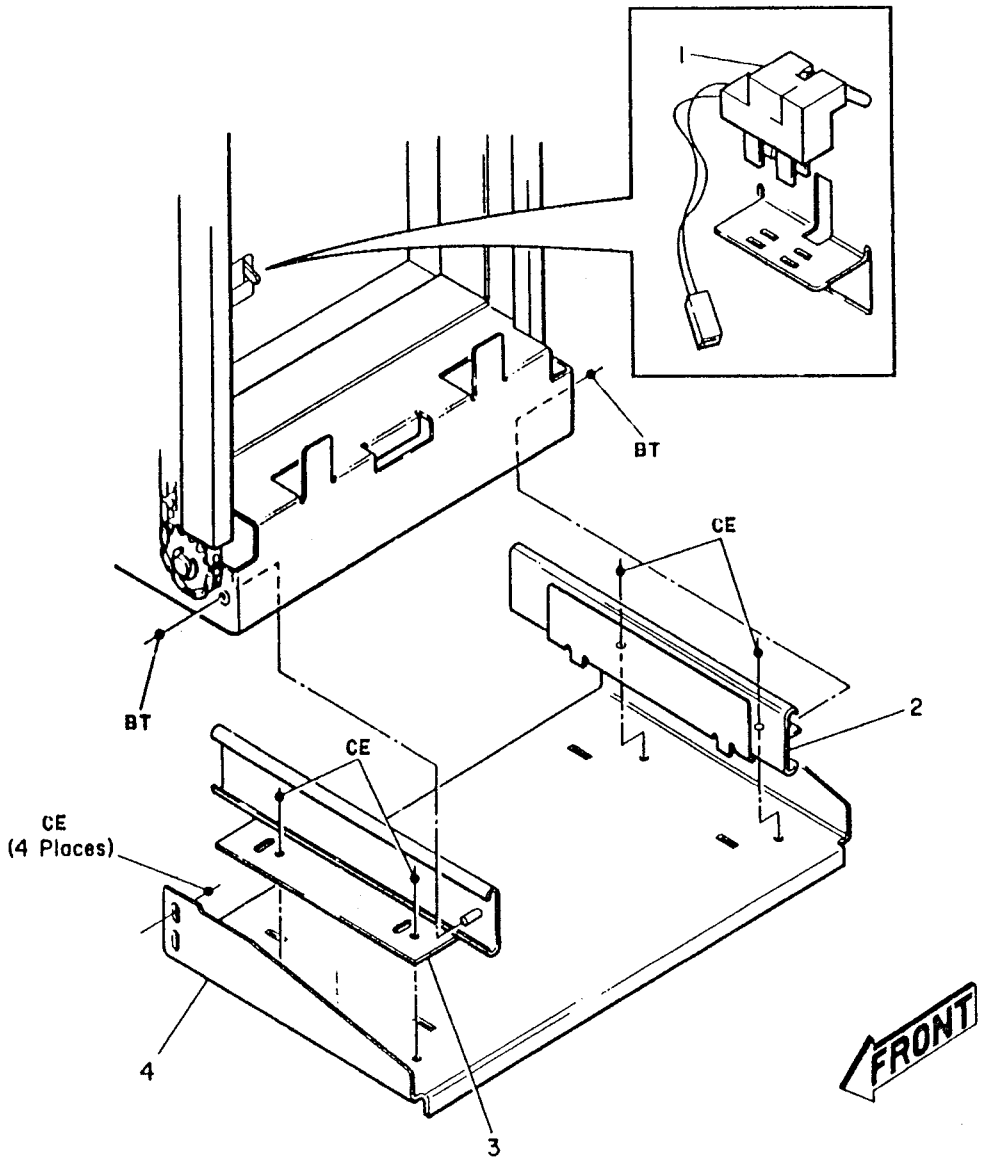

8-8-100-0

PL 4.1 RH Vertical Paper Feed Transport

Item	Part	Description
1	13E93340	BEARING
2	7E81820	GEAR (15T)
3	22K22311	TAKEAWAY ROLLER
4	110K91861	RH UPPER/LOWER INTERLOCK SWITCH (S01-310A/S01-310B)
5	--	RH BAFFLE (NOT SPARED)
6	130K93230	DUPLEX FEED SENSOR (Q08-135) (REP 8.20)
7	54E94130	GUIDE
8	--	BRACKET (NOT SPARED)

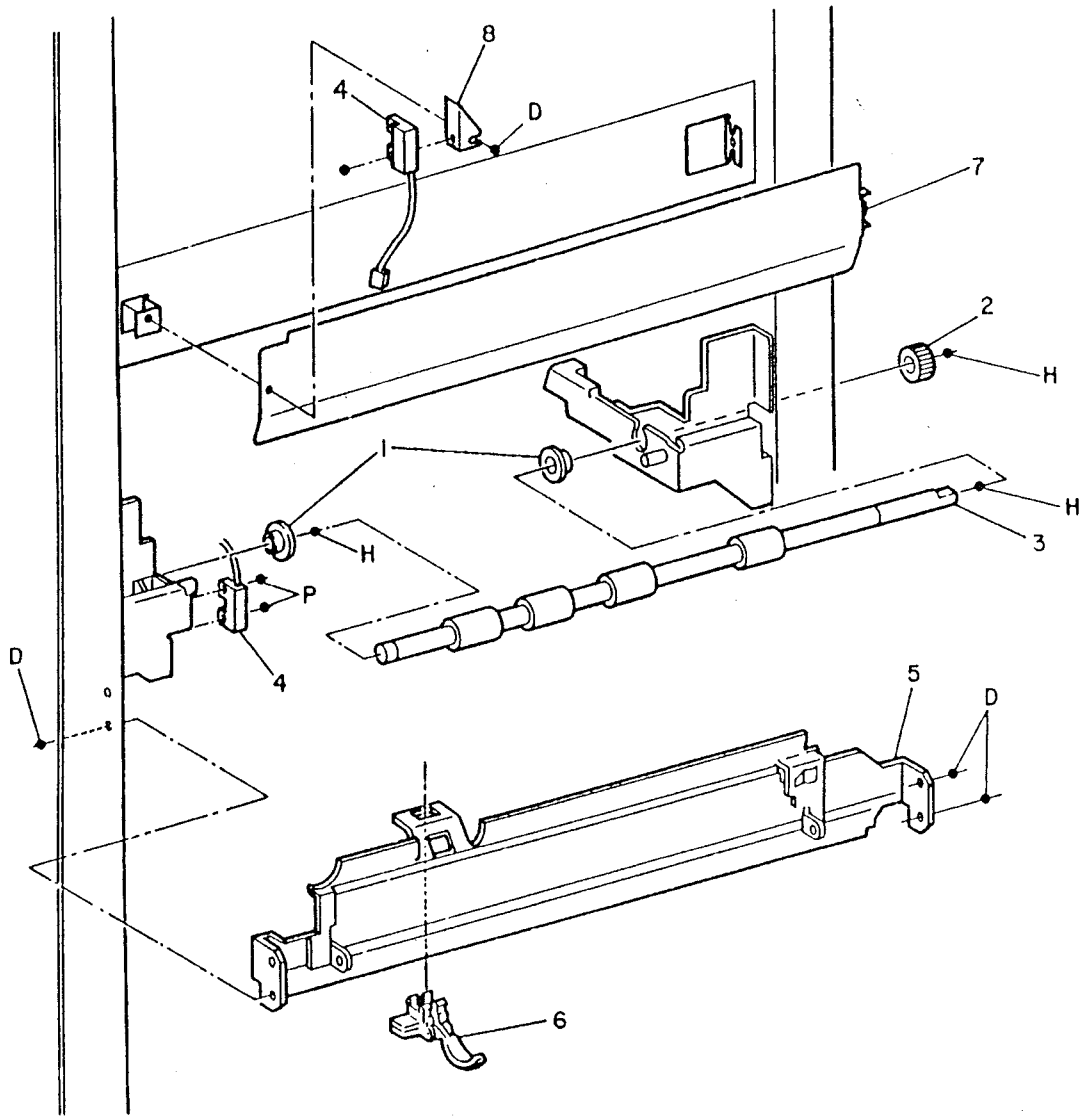

8-8-017-1

PL 4.2 RH Door Feed Cover

Item	Part	Description
1	54K2090	RH GUIDE ASSEMBLY (TRAY 1)
2	--	RH GUIDE ASSEMBLY (TRAYS 2/3 HCF) OR (TRAYS 2/3 AND 4 NON-HCF)
3	--	RH GUIDE ASSEMBLY (DUPLEX TRAY)
4	2E63100	RH DOOR
5	--	MAGNET (P/O ITEM 15)
6	59K90710	PINCH ROLLER (REP 8.13)
7	59K90720	PINCH ROLLER (REP 8.13)
8	9E84960	SPRING ACTUATOR
9	9E84950	SPRING
10	120E92110	ACTUATOR
11	--	RH GUIDE (P/O ITEMS 1/2/3)
12	9E84910	SPRING
13	9E84900	SPRING
14	13E93440	BEARING
15	600K35970	MAGNET KIT
16	38E10077	HCF BEZEL
17	2E37866	BLANK BEZEL (NON-HCF)
18	--	PAPER TRAY BYPASS GUIDE (P/O ITEM 22)
19	--	EXTENSION TRAY (P/O ITEM 22)
20	--	LOWER SUPPORT TRAY (P/O ITEM 22)
21	121E91860	MAGNET
22	50K12693	PAPER TRAY BYPASS ASSEMBLY
23	--	SHAFT LATCH
24	9E34360	SPRING
25	3E18113	DOOR HANDLE
26	9E49361	SPRING CLIP

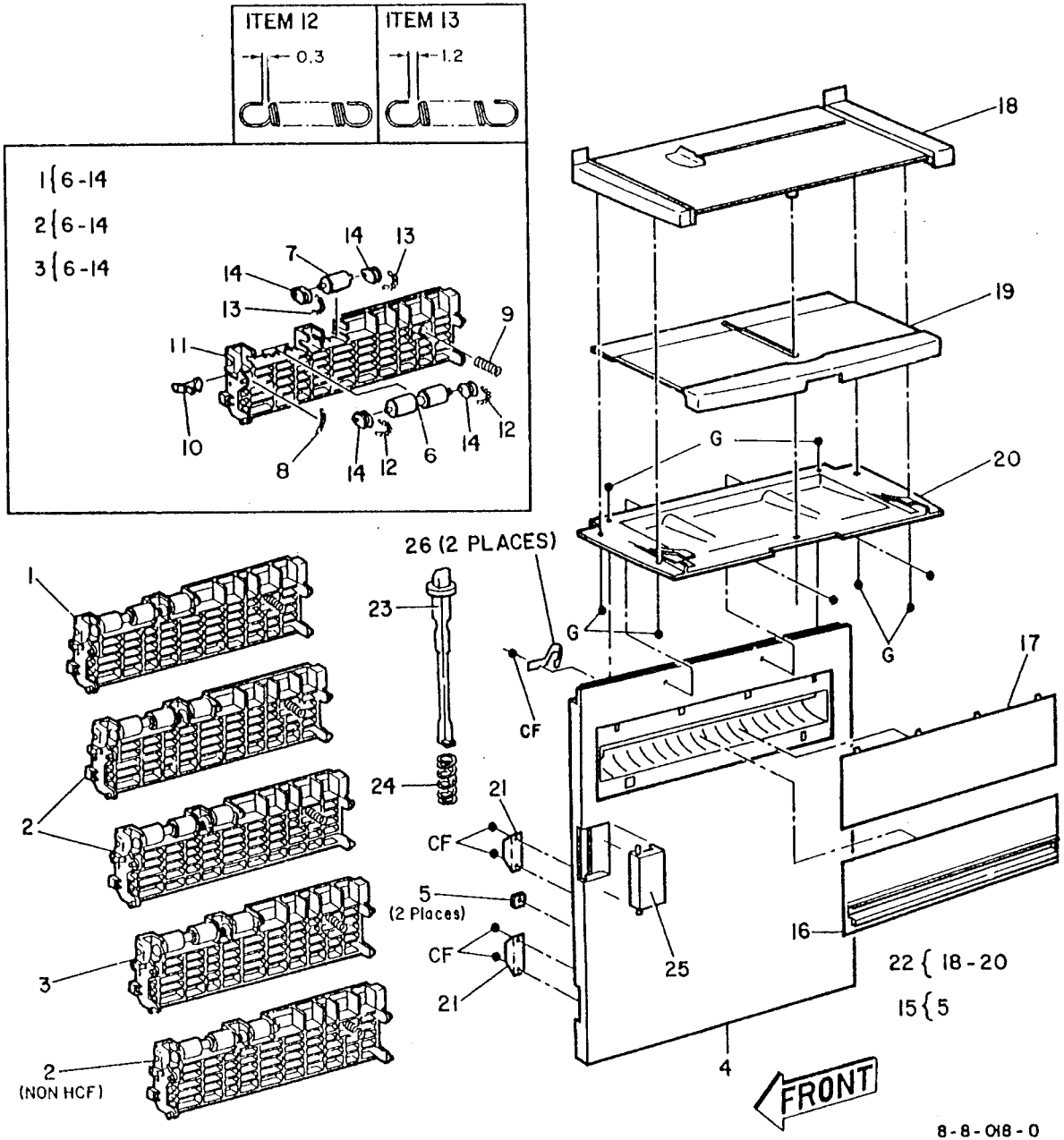

PL 4.3 Tray 1 and 4 Paper Feeder Assembly

Item	Part	Description
1	59K91521	TRAY 1 AND 4 FEEDER ASSEMBLY
2	48E92680	FEEDER COVER
3	7E81550	GEAR (23T)
4	--	SUPPORT BRACKET (P/O ITEM 1)
5	5E91580	COLLAR
6	7E81460	GEAR (28/16T)

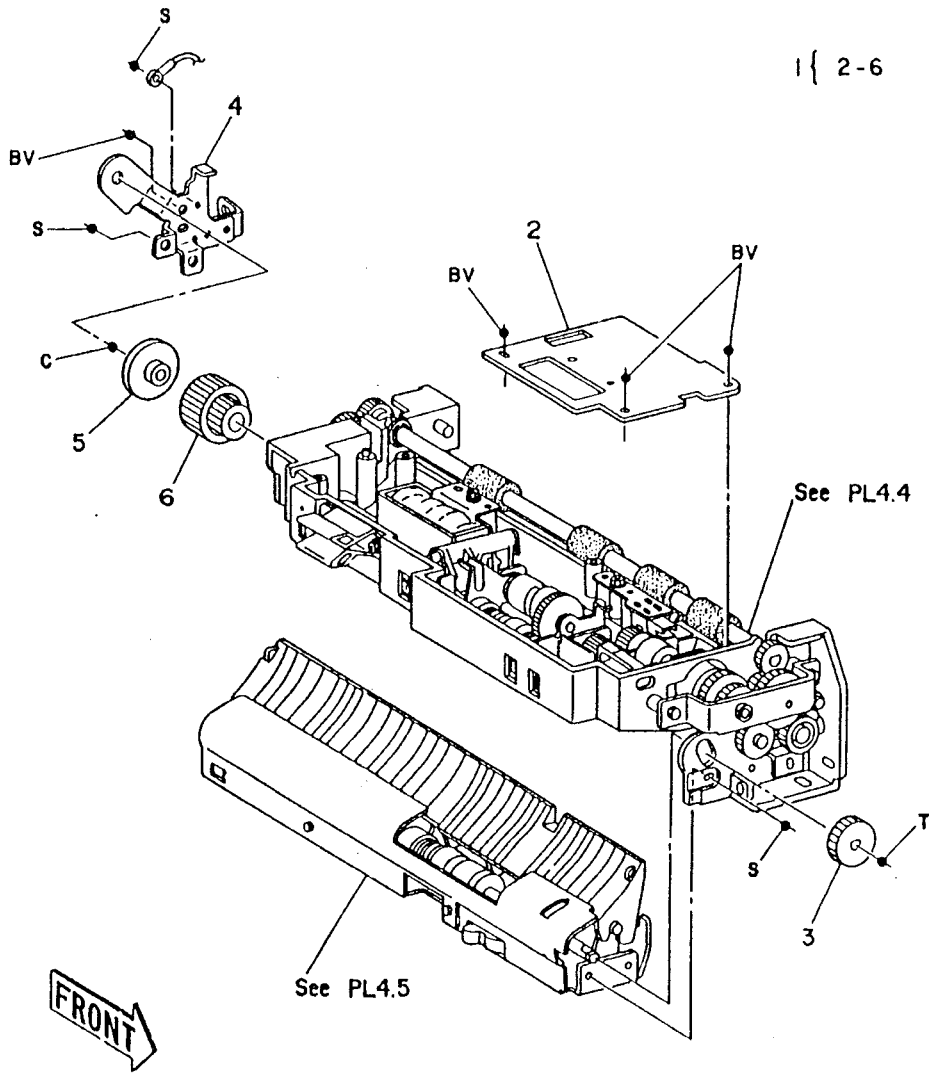

8-8-019-0

PL 4.4A All Trays Upper Paper Feeder (1 of 2)

Item	Part	Description
1	68K71500	FEEDER SUPPORT ASSEMBLY
2	6E81280	SHAFT
3	413W75959	BEARING
4	5K90780	ONE WAY CLUTCH
5	--	FEED AND NUDGER ROLLER (REP 8.1) (P/O ITEM 17)
6	7E81810	GEAR (15T)
7	--	PIN (P/O ITEM 1)
8	68K90584	SUPPORT ASSEMBLY
9	22K22222	NIP ROLL ASSEMBLY
10	7E81820	GEAR (15T)
11	5K90920	ONE WAY CLUTCH
12	9E84340	SPRING
13	--	SENSOR PLATE (NOT SPARED)
14	--	EARTH WIRE ASSEMBLY (NOT SPARED)
15	130K93251	FEED SENSOR (REP 8.3) (Q08-100 TRAY 1) (Q08-110 TRAY 2) (Q08-120 TRAY 3) (Q08-125 TRAY 4)
16	107K90391	STACK HEIGHT SENSOR (REP 7.16) (Q07-300 TRAY 1) (Q07-315 TRAY 2) (Q07-330 TRAY 3) (Q07-345 TRAY 4)
17	600K91980	FEEDER ROLLER KIT
18	152K70101	PAPER FEEDER HARNESS ASSEMBLY

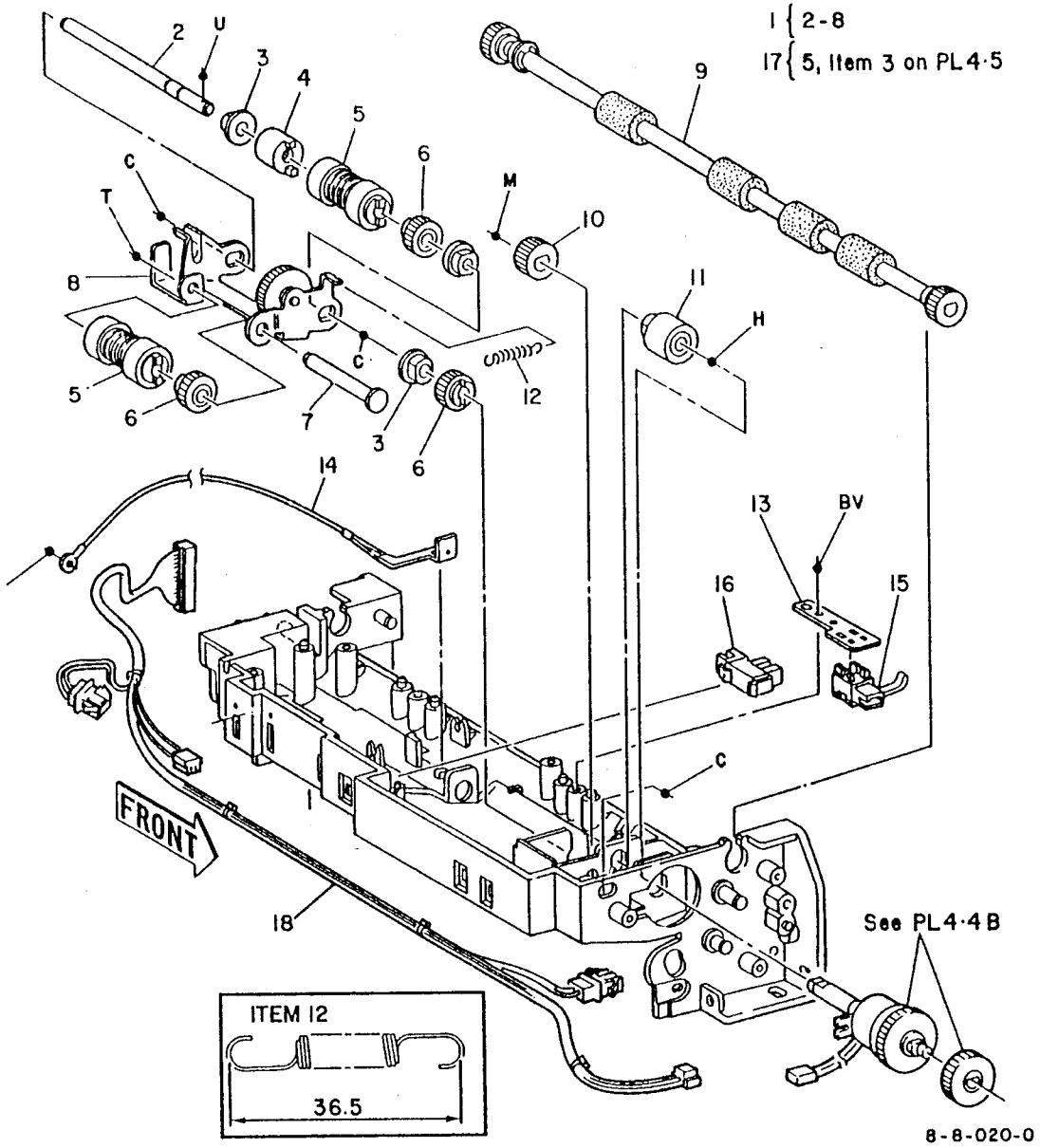

PL 4.4B All Trays Upper Paper Feeder (2 of 2)

Item	Part	Description
1	--	UPPER FRAME (NOT SPARED)
2	7E81480	GEAR (16/23T)
3	7E81470	GEAR (19T)
4	68K91570	GEAR SUPPORT ASSEMBLY
5	13E93710	BEARING
6	68K91120	GEAR SUPPORT ASSEMBLY
7	7E82700	GEAR (23T)
8	121K93731	FEED CLUTCH (REP 8.2) (CL08-010 TRAY 1) (CL08-025 TRAY 2) (CL08-030 TRAY 3) (CL08-045 TRAY 4)
9	120K90321	ACTUATOR
10	7E81490	GEAR (16T)
11	--	D-SHAFT
12	19E93450	CLAMP
13	9E84330	SPRING
14	--	LINK (NOT SPARED)
15	121K93611	NUDGER SOLENOID (REP 7.14) (SOL07-010 TRAY 1) (SOL07-020 TRAY 2) (SOL07-030 TRAY 3) (SOL07-040 TRAY 4)
16	68E3162	PLATE
17	107K90391	TRAY EMPTY SENSOR (REP 7.15) (Q07-310 TRAY 1) (Q07-325 TRAY 2) (Q07-340 TRAY 3) (Q07-355 TRAY 4)

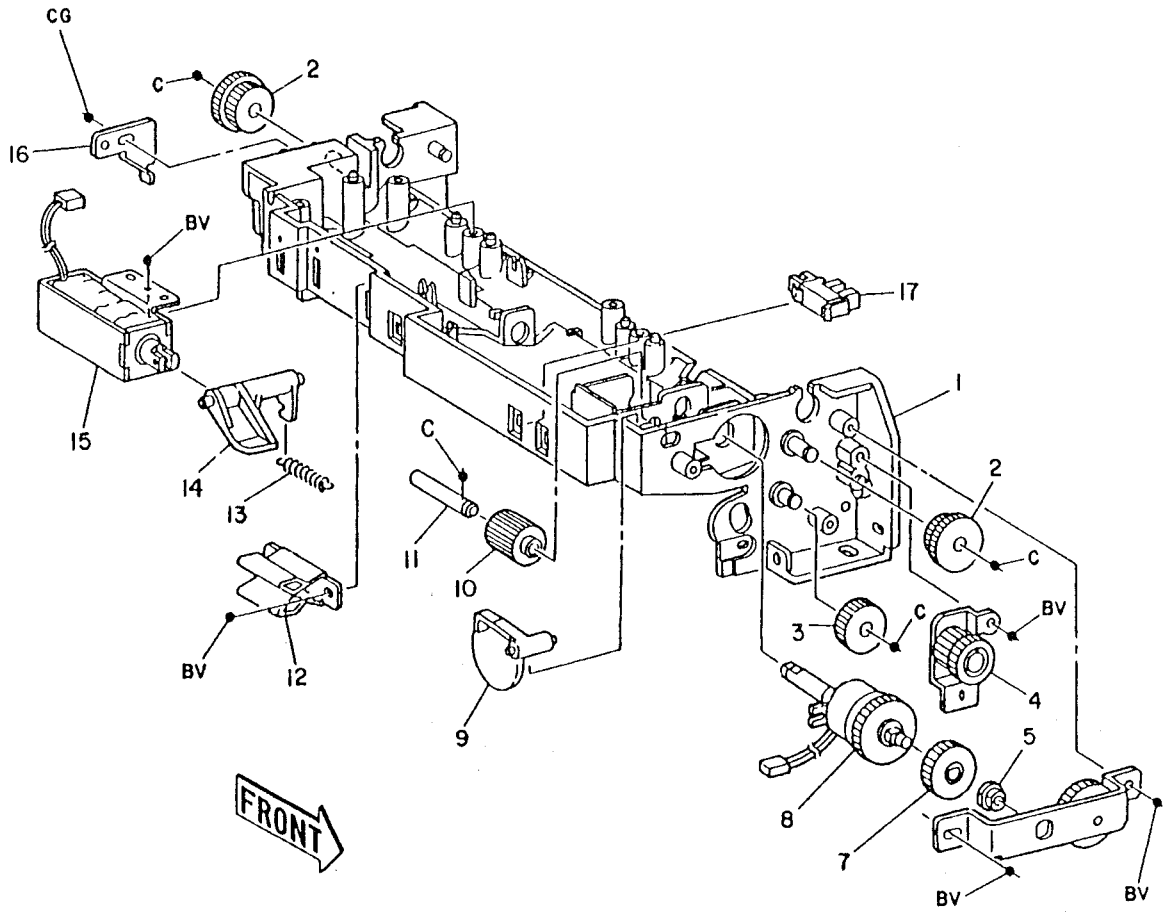

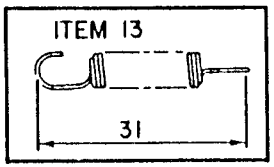

8-8-085-0

PL 4.5 Tray 1 and 4 Lower Feeder Assembly

Item	Part	Description
1	1K22853	LOWER FEEDER ASSEMBLY
2	54E93250	CHUTE BAFFLE
3	--	RETARD ROLLER (P/O ITEM 17 ON PL 4.4A)
4	--	SPACER (P/O ITEM 1)
5	5K90970	FRICTION CLUTCH
6	6E81290	SHAFT
7	13E92890	BEARING
8	--	RETARD SUPPORT (P/O ITEM 1)
9	9E84660	SPRING (ADJ 8.1)
10	9E84670	SPRING
11	26E83180	SHOULDER SCREW
12	--	LINK (P/O ITEM 1)
13	--	LOWER SUPPORT (P/O ITEM 1)
14	--	GUIDE (P/O ITEM 1)

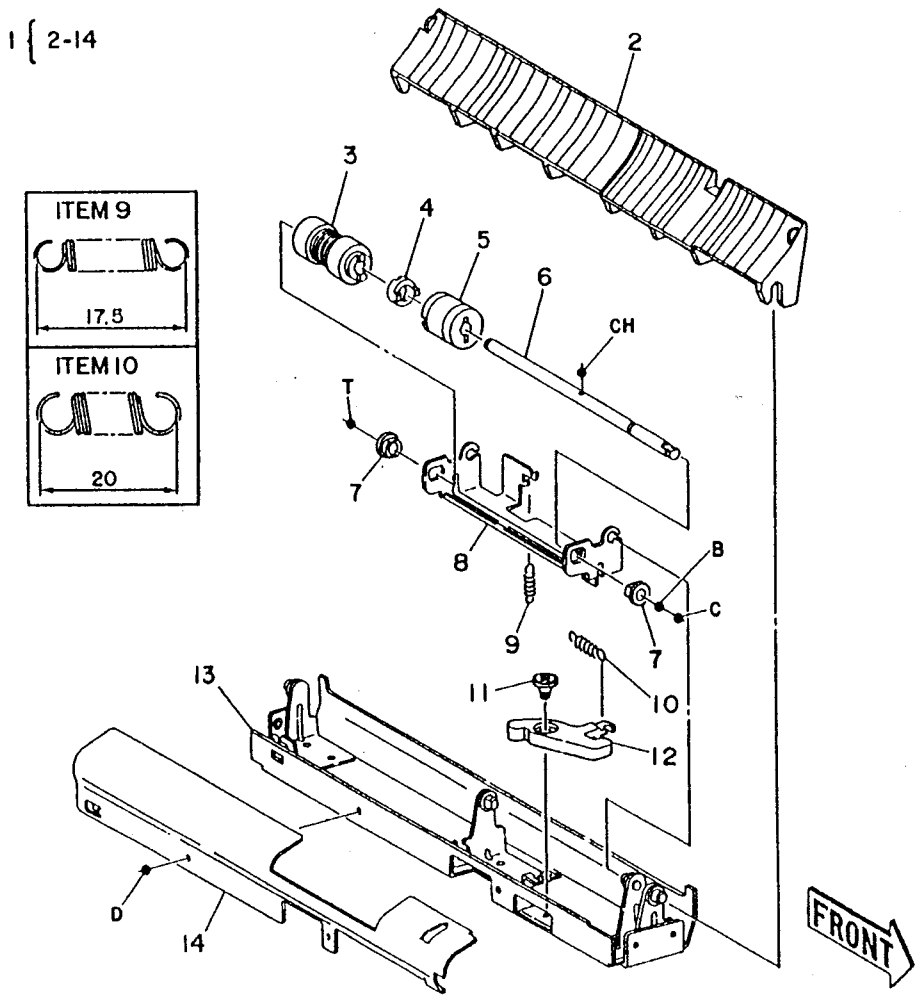

8-8-021-0

PL 4.6 Tray 2 and 3 Feeder Assembly

Item	Part	Description
1	59K91511	TRAY 2 AND 3 FEEDER ASSEMBLY
2	48E92680	FEEDER COVER
3	48E91380	CONNECTOR COVER
4	--	SUPPORT BRACKET (P/O ITEM 1)
5	5E91580	COLLAR
6	7E81460	GEAR (28/16T)
7	7E81510	GEAR (16/33T)
8	7E81520	GEAR (16/39T)
9	7E81470	GEAR (19T)
10	7E81550	GEAR (23T)

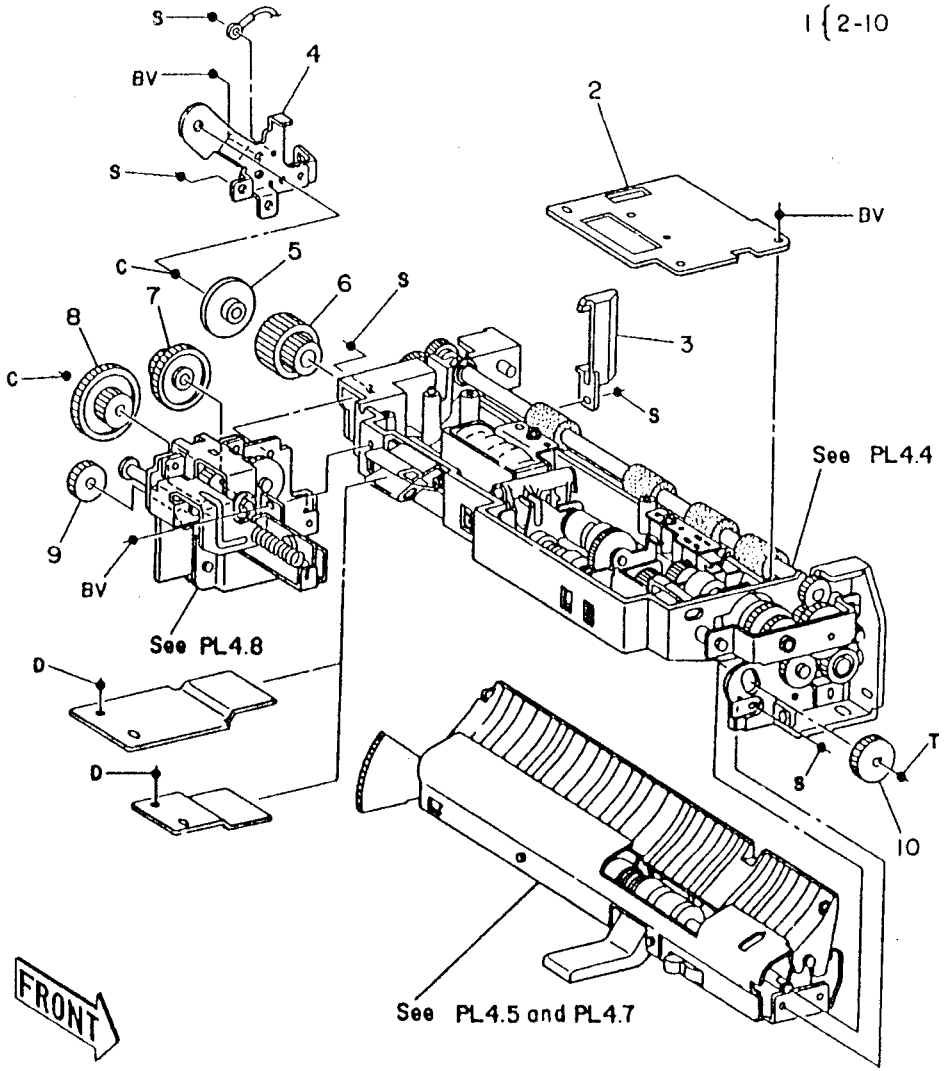

8-8-022-0

PL 4.6 Tray 2 and 3 Feeder Assembly

Item	Part	Description
1	59K91511	TRAY 2 AND 3 FEEDER ASSEMBLY
2	48E92680	FEEDER COVER
3	48E91380	CONNECTOR COVER
4	--	SUPPORT BRACKET (P/O ITEM 1)
5	5E91580	COLLAR
6	7E81460	GEAR (28/16T)
7	7E81510	GEAR (16/33T)
8	7E81520	GEAR (16/39T)
9	7E81470	GEAR (19T)
10	7E81550	GEAR (23T)

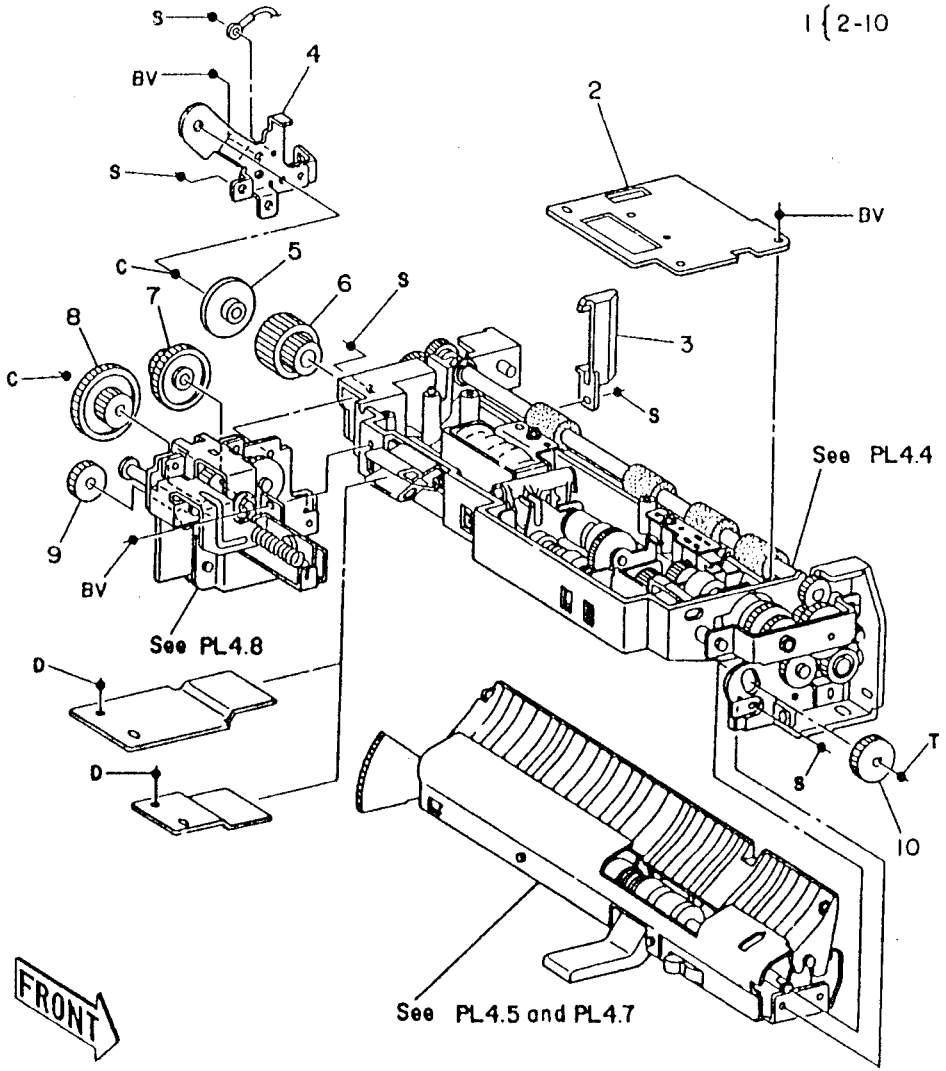

8-8-022-0

PL 4.7 Tray 2 and 3 Lower Feeder Assembly

Item	Part	Description
1	1K22472	LOWER FEEDER ASSEMBLY
2	54E93250	CHUTE BAFFLE
3	--	RETARD ROLLER
4	--	SPACER (P/O ITEM 1)
5	5K90970	FRICTION CLUTCH
6	6E81290	SHAFT
7	13E92890	BEARING
8	--	RETARD SUPPORT (P/O ITEM 1)
9	9E84660	SPRING (ADJ 8.1)
10	9E84670	SPRING
11	26E83180	SHOULDER SCREW
12	--	LINK (P/O ITEM 1)
13	--	LOWER SUPPORT (P/O ITEM 1)
14	--	GUIDE (P/O ITEM 1)
15	6K92431	ELEVATOR SHAFT ASSEMBLY

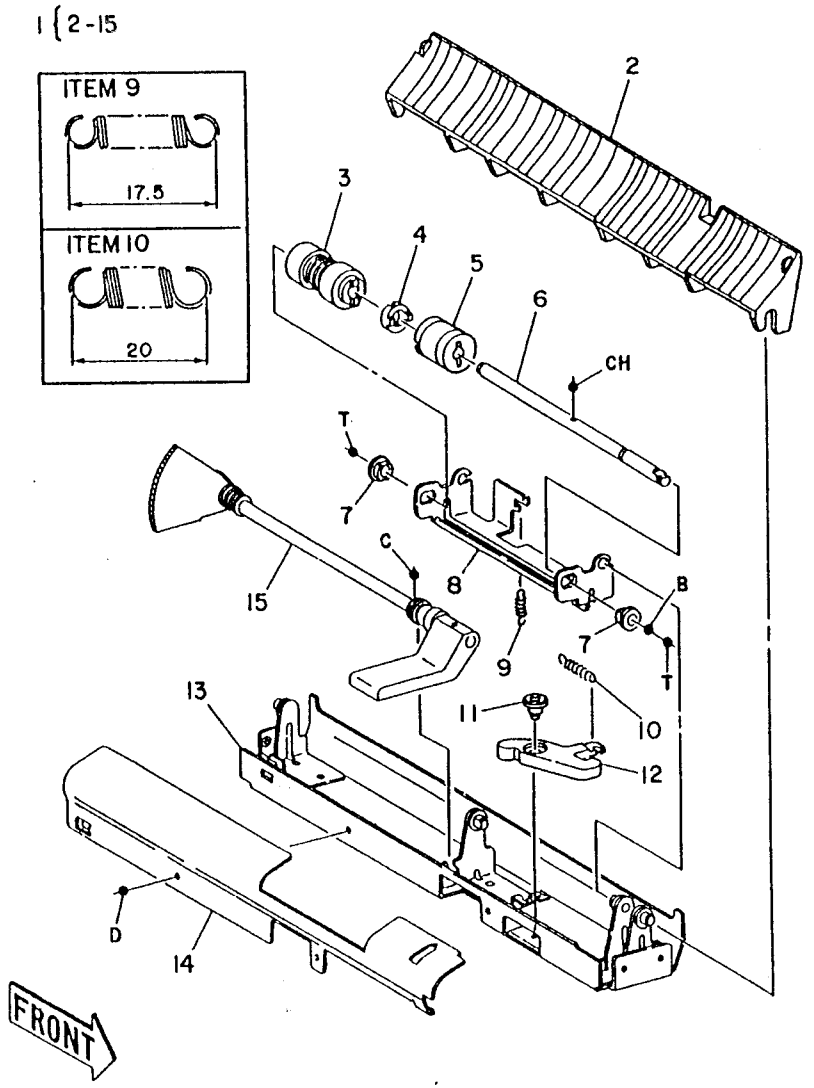

8-8-023-0

PL 4.8 Trays 2 and 3 Elevator Drive Assembly

Item	Part	Description
1	7K91895	ELEVATOR DRIVE ASSEMBLY
2	7E81530	GEAR (17/25T)
3	7E81540	GEAR (16T)
4	68K91983	ELEVATOR CLUTCH (REP 7.19) (CL07-015 TRAY 2) (CL07-025 TRAY 3)
5	9E84320	SPRING
6	68K71470	SLIDE SUPPORT ASSEMBLY
7	--	PLATE ASSEMBLY (P/O ITEM 1)
8	48E90010	COVER
9	7K91610	ONE WAY GEAR
10	--	DRIVE SHAFT (P/O ITEM 1)

1 {2-10

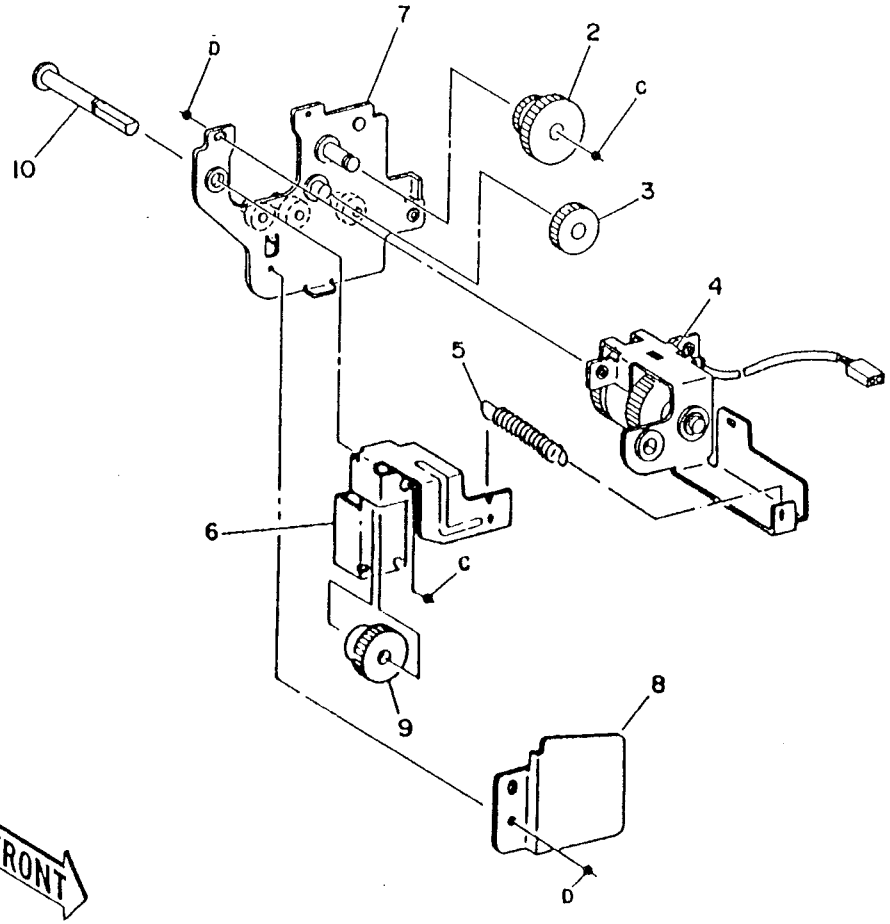

8-8-024-0

PL 4.9 Paper Tray Bypass

Item	Part	Description
1	22K26982	PAPER TRAY BYPASS FEEDER (REP 8.4)
2	9E84360	SPRING
3	--	LINK ASSEMBLY
4	7E24200	GEAR (18/28T)
5	--	RETARD PAD (REP 8.5) (P/O ITEM 14)
6	9E28850	SPRING
7	--	CHUTE (P/O ITEM 1)
8	68K9221	SUPPORT BRACKET
9	50K17211	PAPER TRAY BYPASS ASSEMBLY
10	--	BYPASS TRAY (P/O ITEM 9)
11	--	INSTRUCTION LABEL (SEE PL 17.2B)
12	--	SIZE LABEL (SEE PL 17.4)
13	--	MAX LABEL (SEE PL 17.2B)
14	600K36564	FEEDER REPAIR KIT

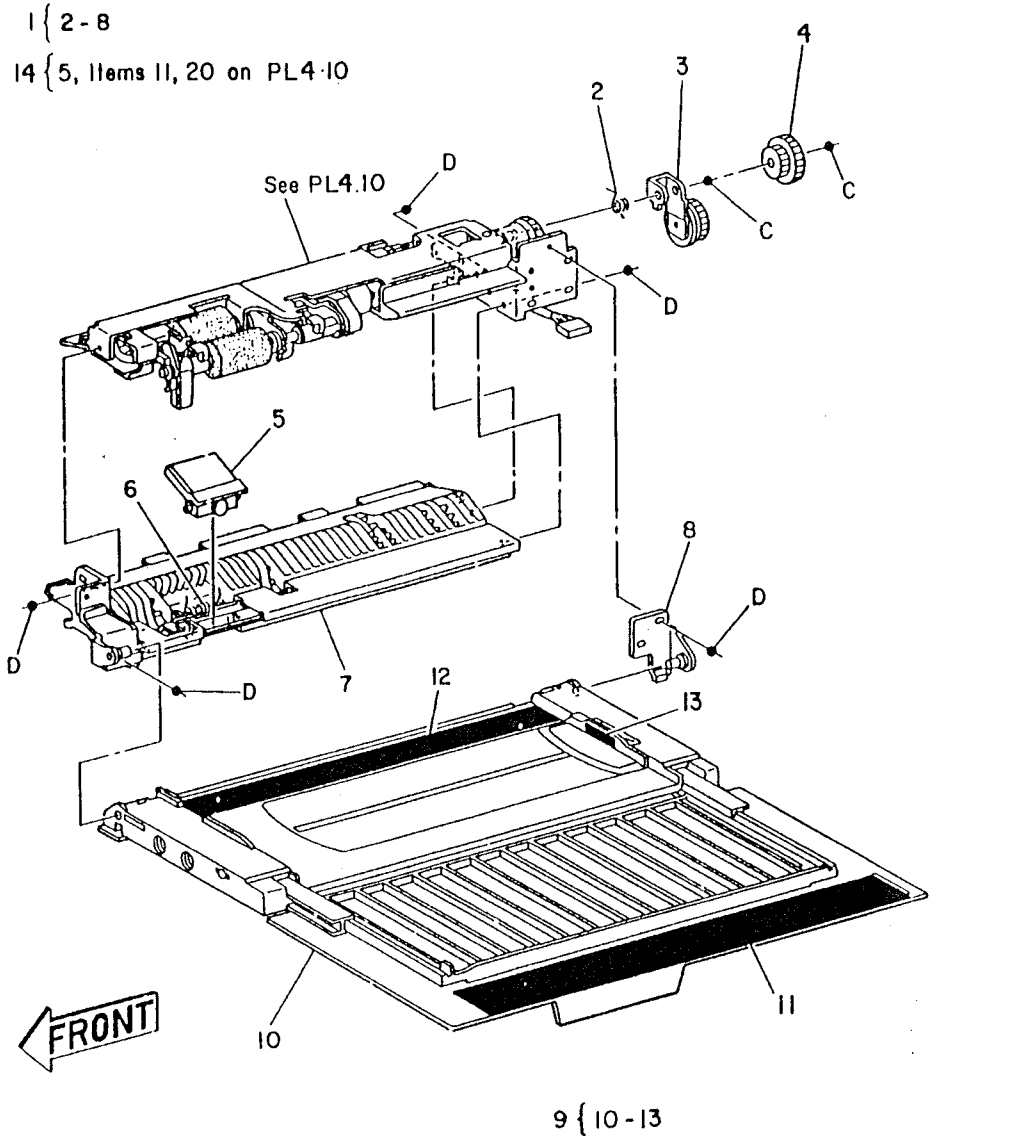

8-8-025-0

PL 4.10 Paper Tray Bypass Feeder

Item	Part	Description
1	121K94190	BYPASS FEED CLUTCH ASSEMBLY (CL08-090) (REP 8.6)
2	13P61260	BEARING
3	--	SHAFT (P/O ITEM 1 ON PL4.9)
4	--	COVER (P/O ITEM 1 ON PL4.9)
5	--	BRACKET (P/O ITEM 1 ON PL4.9)
6	50E9330	GATE
7	107K90391	BYPASS EMPTY SENSOR (Q07-385) (REP 7.18)
8	130K93270	BYPASS LENGTH SENSOR (Q07-387) (REP 7.17)
9	--	PAPER GUIDE (P/O ITEM 1 ON PL4.9)
10	13E90840	BEARING
11	--	FEED ROLL (REP 8.7) (P/O ITEM 14 ON PL 4.9)
12	5K90801	FRICTION CLUTCH ASSEMBLY
13	14E93270	SPACER
14	7E81591	GEAR (25T)
15	7E81610	GEAR (40T)
16	13E93040	BEARING
17	2E46670	GEAR COVER
18	--	NUDGER ROLL SUPPORT (P/O ITEM 1 ON PL4.9)
19	9E26550	SPRING
20	--	NUDGER ROLL (REP 8.7) (P/O ITEM 14 ON PL 4.9)
21	--	GATE
22	--	EMPTY ACTUATOR
23	7E81600	GEAR (30T)
24	13E90760	BEARING
25	--	BEARING (P/O ITEM 1 ON PL4.9)
26	--	SHAFT (P/O ITEM 1 ON PL4.9)

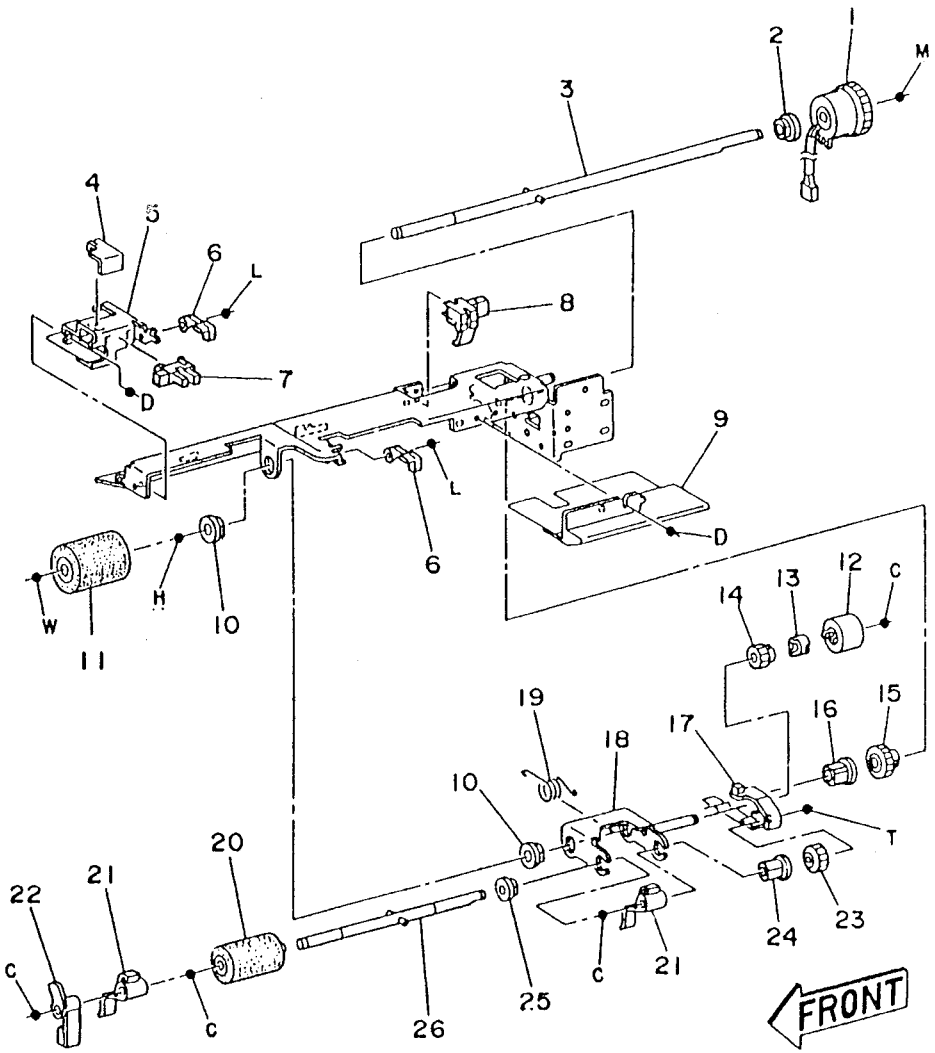

8-8-026-0

PL 4.11 Registration and Primary Drives

Item	Part	Description
1	--	COLLAR (P/O ITEM 1 ON PL4.12)
2	7E82910	GEAR (29T)
3	7E82920	GEAR (30T)
4	12K91100	LINK ASSEMBLY
5	130K93410	NIP SPLIT SENSOR (Q08-390) (REP 8.10)
6	127K80111	REGISTRATION SIDE SHIFT MOTOR ASSEMBLY (MOT08-075) (REP 8.8)
7	--	REGISTRATION SIDE SHIFT HOME SENSOR (Q08-380) (REP 8.9)
8	--	PLASTISLIP (SEE ITEM 9 ON PL 16.1)

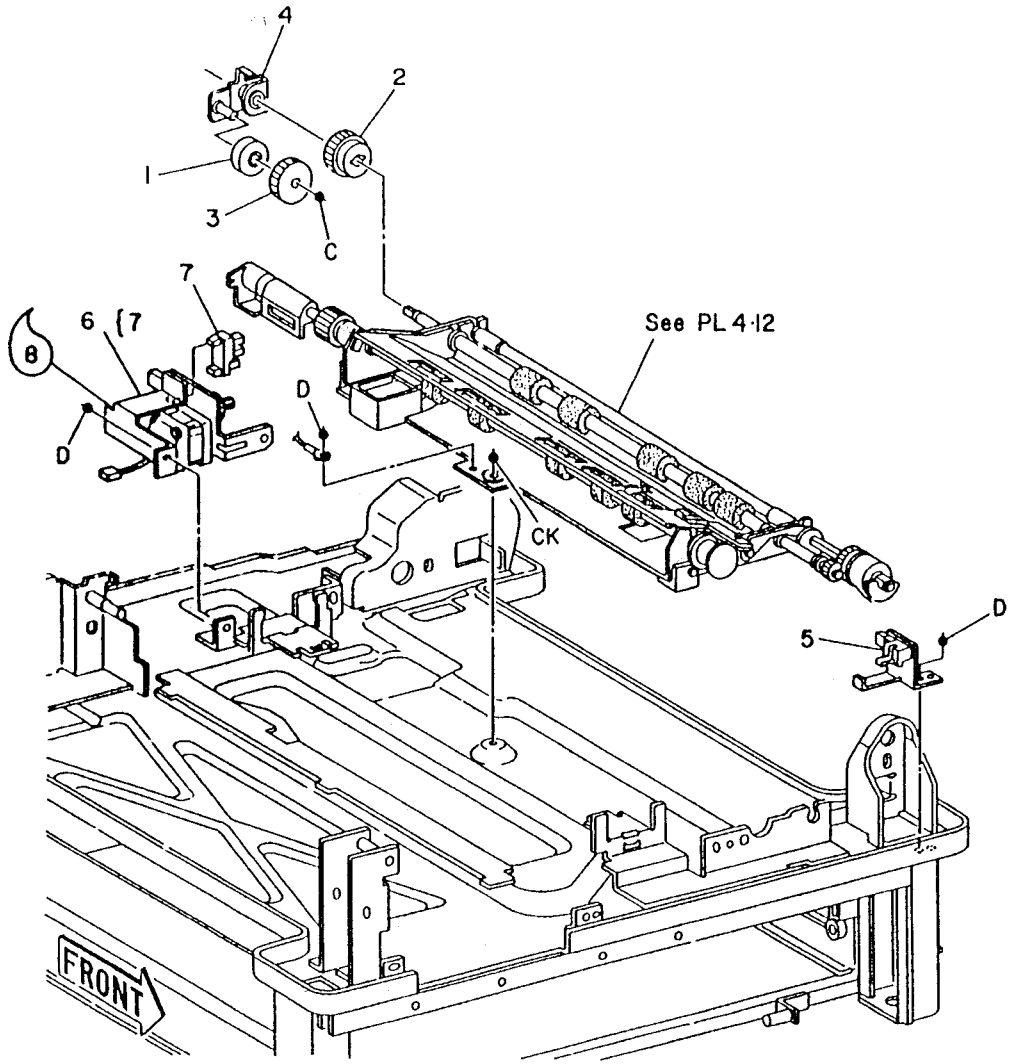

8-8-027-0

PL 4.12 Registration Paper Path Assembly

Item	Part	Description
1	54K2541	REGISTRATION PAPER PATH ASSEMBLY (REP 8.11)
2	5E91740	COLLAR
3	6E81580	SHAFT
4	13E93290	BEARING
5	59K90570	PRE-REGISTRATION ROLL
6	50K17420	REGISTRATION GATE (REP 8.15)
7	54K80981	REGISTRATION LOWER GUIDE
8	9E34030	SPRING
9	59K90950	REGISTRATION ROLL
10	5K90900	REGISTRATION CLUTCH
11	7E82900	RACK
12	7E82930	GEAR (21T)
13	5E91980	COLLAR
14	413W77559	BEARING
15	121K80140	REGISTRATION GATE SOLENOID (SOL08-070) (REP 8.14)
16	11E91430	LEVER
17	8E90810	PRE-REGISTRATION CAM
18	13E93280	BEARING
19	121K93710	NIP SPLIT CLUTCH (CL08-080) (REP 8.12)
20	7E82450	GEAR (18T)
21	120E92070	ACTUATOR
22	130K93440	TOP EDGE REGISTRATION SENSOR (Q08-385) (REP 8.17) (ADJ 8.3)
23	9E27190	FRONT TORSION SPRING
24	9E27200	REAR TORSION SPRING
25	13E90980	BEARING
26	55E92531	SHIELD
27	5E91910	COLLAR
28	130K93531	LEAD EDGE REGISTRATION SENSOR (Q08-150) (REP 8.16)
29	--	REAR SUPPORT
30	--	FRONT SUPPORT
31	413W75659	BEARING
32	9E29290	REGISTRATION SPRING
33	--	PLASTISLIP (SEE ITEM 9 ON PL 16.1)

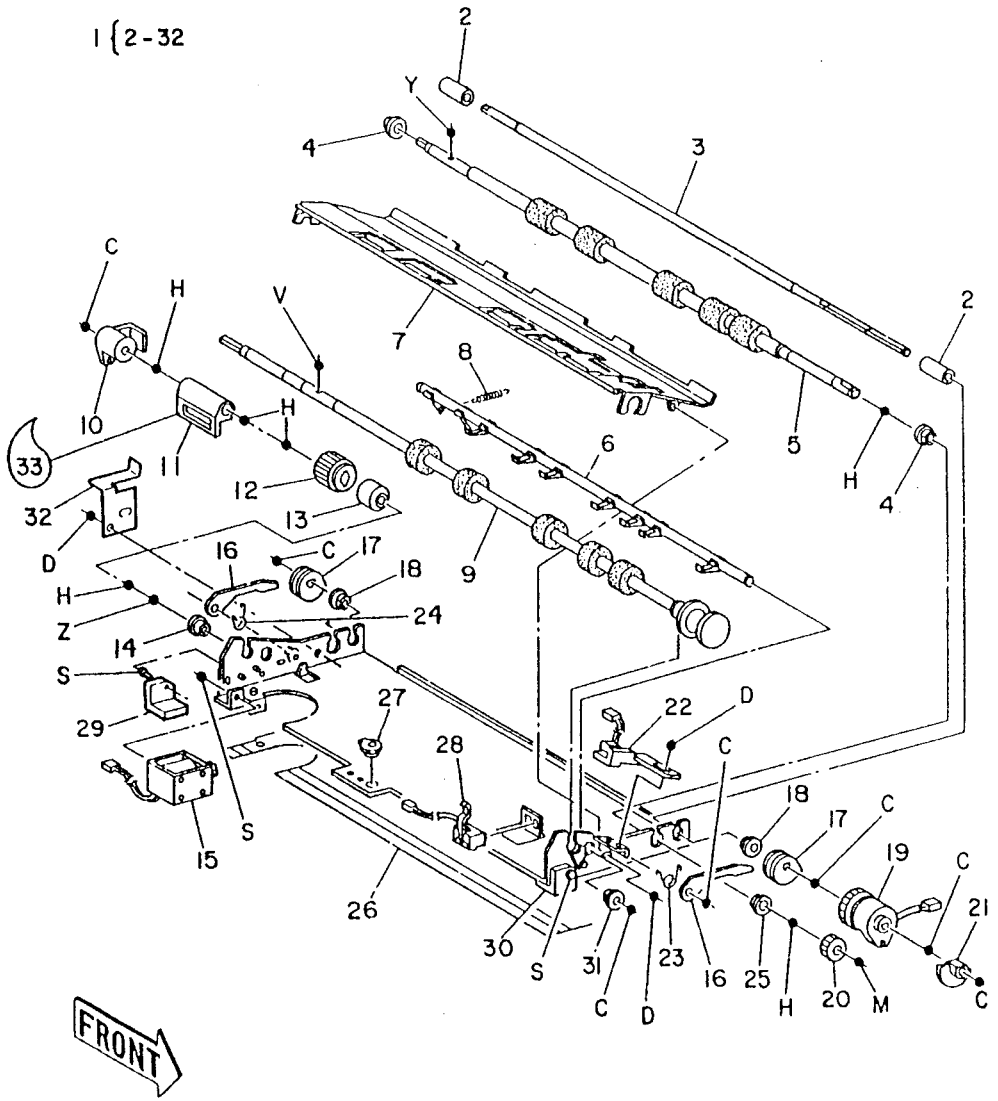

8-8-028-0

PL 4.13 Upper Registration Paper Path Assembly

Item	Part	Description
1	22K27350	UPPER REGISTRATION GUIDE ASSEMBLY (REP 8.11)
2	13P61270	BEARING
3	13E8262	BEARING PAD
4	9E27110	FRONT SPRING
5	9E27120	REAR SPRING
6	--	BRACKET (P/O ITEM 1)
7	--	SHAFT (P/O ITEM 1)
8	59K90580	PRE-REGISTRATION PINCH ROLL
9	59K91240	REGISTRATION PINCH ROLL
10	13E93720	BEARING
11	32E92170	GUIDE
12	54K2920	UPPER GUIDE
13	--	BRUSH CLEANER (P/O ITEM 12)

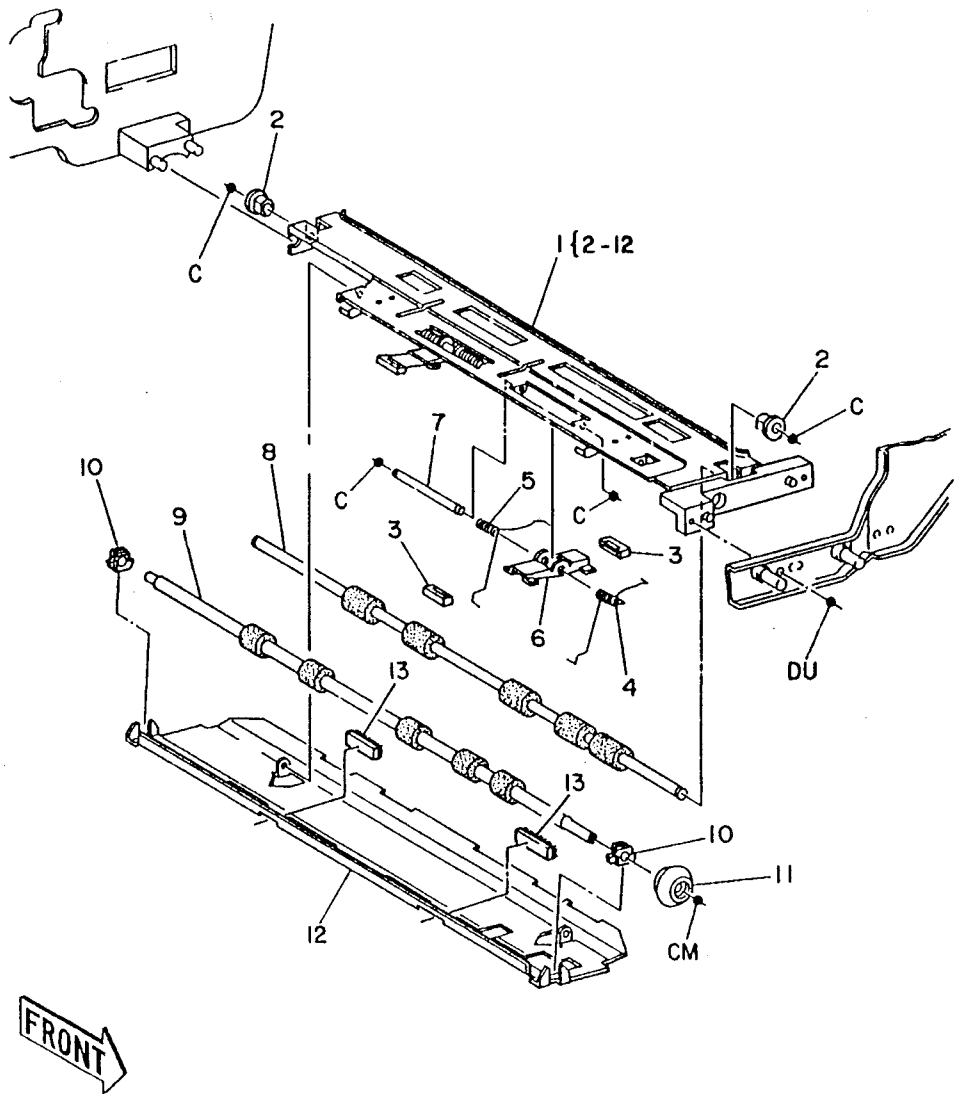

8-8-029-1

PL 4.14 Decurler and Inverter Assembly

Item	Part	Description
1	--	INVERTER COVER (P/O ITEM 2)
2	54K82371	INVERTER COVER
3	22K24860	PINCH ROLL
4	22K24870	PINCH ROLLER
5	9E28741	TORSION SPRING
6	50K81552	INVERTER GATE ASSEMBLY
7	--	LINK STOPPER PLATE (NOT SPARED)
8	110K91840	LH LOWER INTERLOCK SWITCH (S01-320)
9	68K92080	REAR BRACKET ASSEMBLY
10	68K2872	DUPLEX LATCH BRACKET ASSEMBLY
11	--	CLAMP (SEE PL 18.3)
12	22E93110	COVER ROLL SUPPORT
13	121E90450	MAGNET
14	9E84220	SPRING
15	11E91281	INVERTER LEVER
16	121K93560	INVERTER SOLENOID (SOL10-030)
17	12E91690	LINK STOPPER
18	105E92020	STATIC ELIMINATOR
19	19E91000	NYLON RIVET
20	--	GUIDE (NOT SPARED)
21	130E1893	DUPLEX LATCH SENSOR (Q07-374)

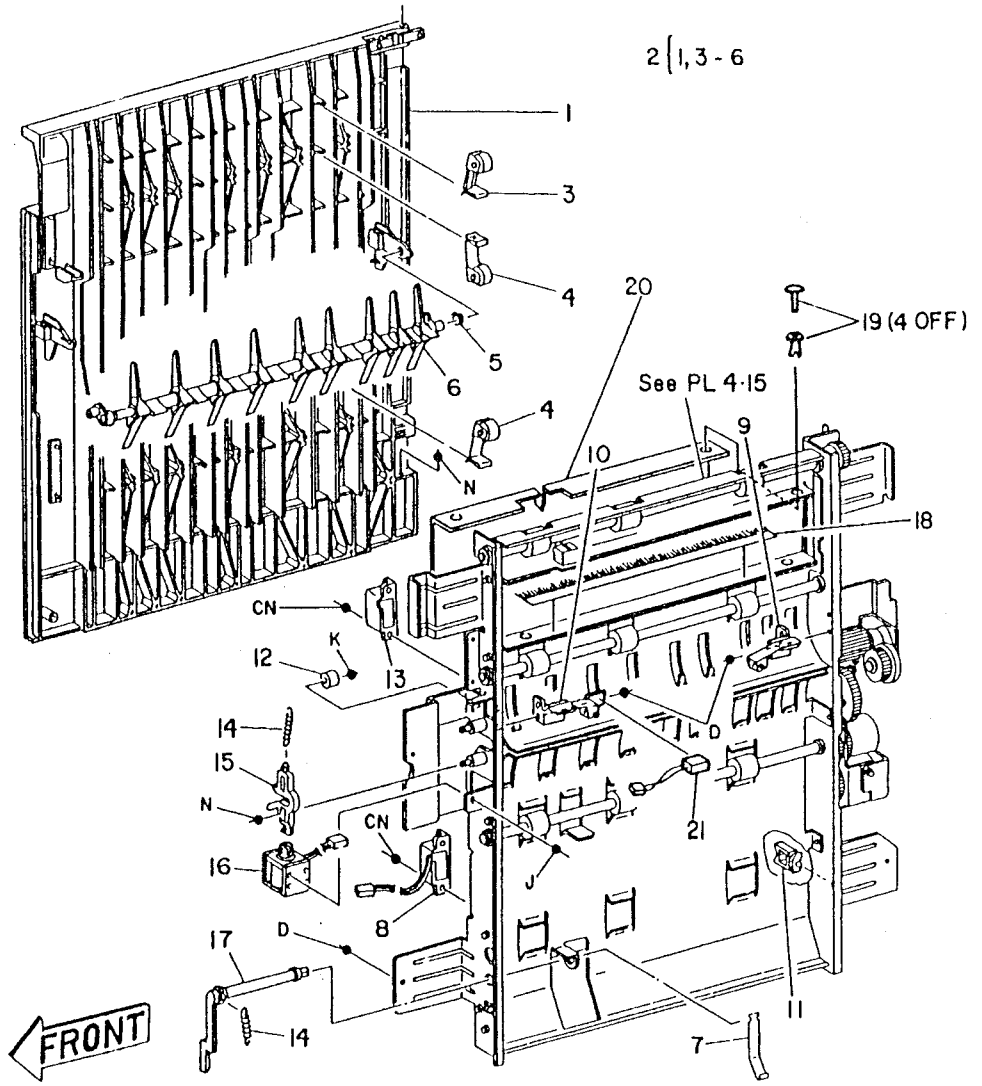

8-8-030-0

PL 4.15 Inverter Drive Assembly

Item	Part	Description
1	23E92150	INVERTER DRIVE BELT
2	5E92020	COLLAR
3	13E93080	BEARING
4	7E83290	GEAR PULLEY
5	7E81701	GEAR PULLEY
6	5E91630	COLLAR
7	22E93100	IDLER ROLLER
8	7E82870	GEAR (24T/8T)
9	7E81710	GEAR PULLEY
10	11K91160	LEVER ASSEMBLY
11	68K2870	BRACKET
12	7E82610	GEAR
13	7E82480	GEAR
14	9E84490	SPRING
15	121K93740	FORWARD AND REVERSE CLUTCH (CL10-040) (CL10-43)
16	30E76061	CLUTCH SUPPORT
17	6E81430	CLUTCH SHAFT
18	7E81670	GEAR (15T)
19	130K93210	VERTICAL SENSOR (Q10-110)
20	22K84790	SLIP ROLLER
21	22K84800	ROLLER ASSEMBLY
22	7E82620	GEAR (33T)

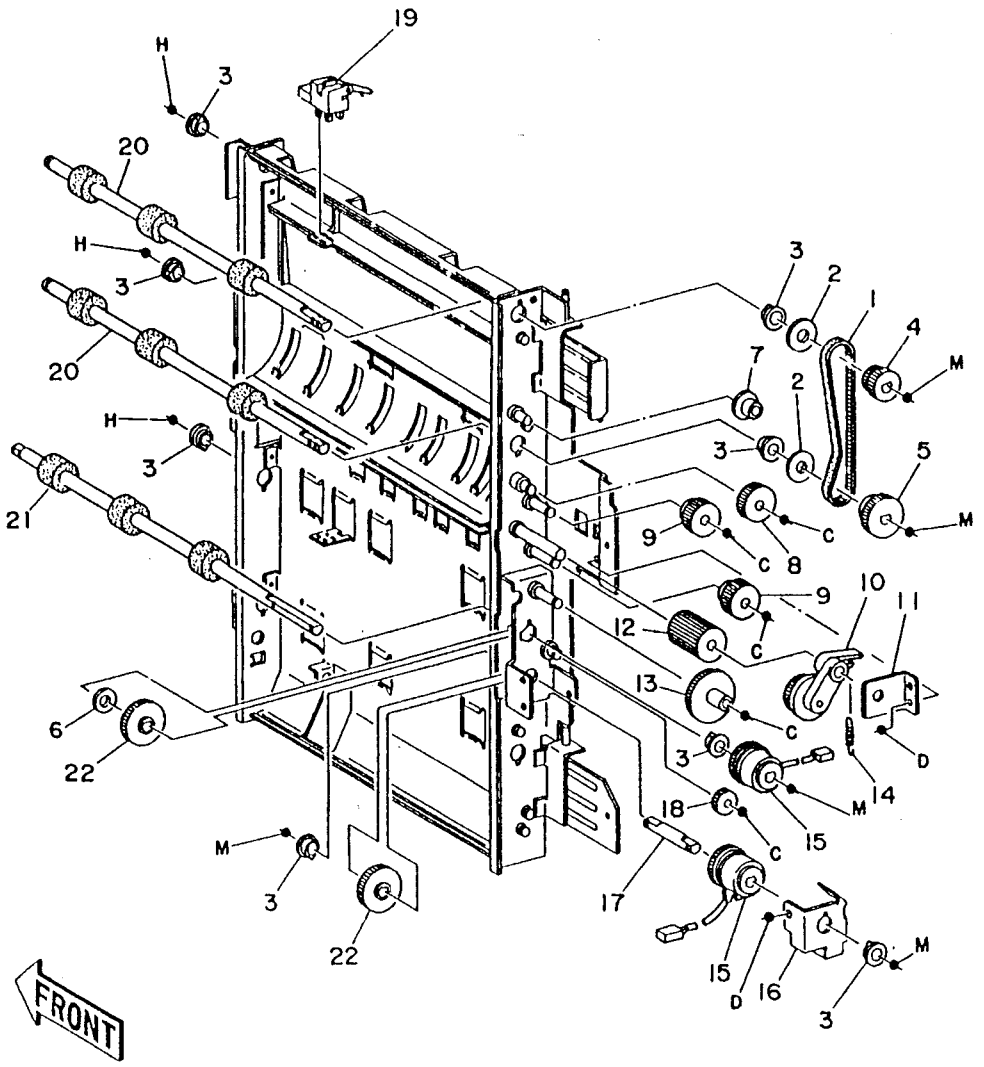

8-8-031-0

PL 4.16 Duplex Tray Slide

Item	Part	Description
1	--	SUPPORT PIN (NOT SPARED)
2	22E91140	DUPLEX SUPPORT ROLLER
3	110E90370	DUPLEX INTERLOCK SWITCH (S07-375)
4	14K80010	SLIDE PAD (REP 7.7)
5	22E93080	SLIDE ROLL
6	--	INSTRUCTION (DUPLEX TRAY) LABEL (SEE PL 17.2B)
7	--	INSTRUCTION (DUPLEX TRAY) LABEL (SEE PL 17.2B)

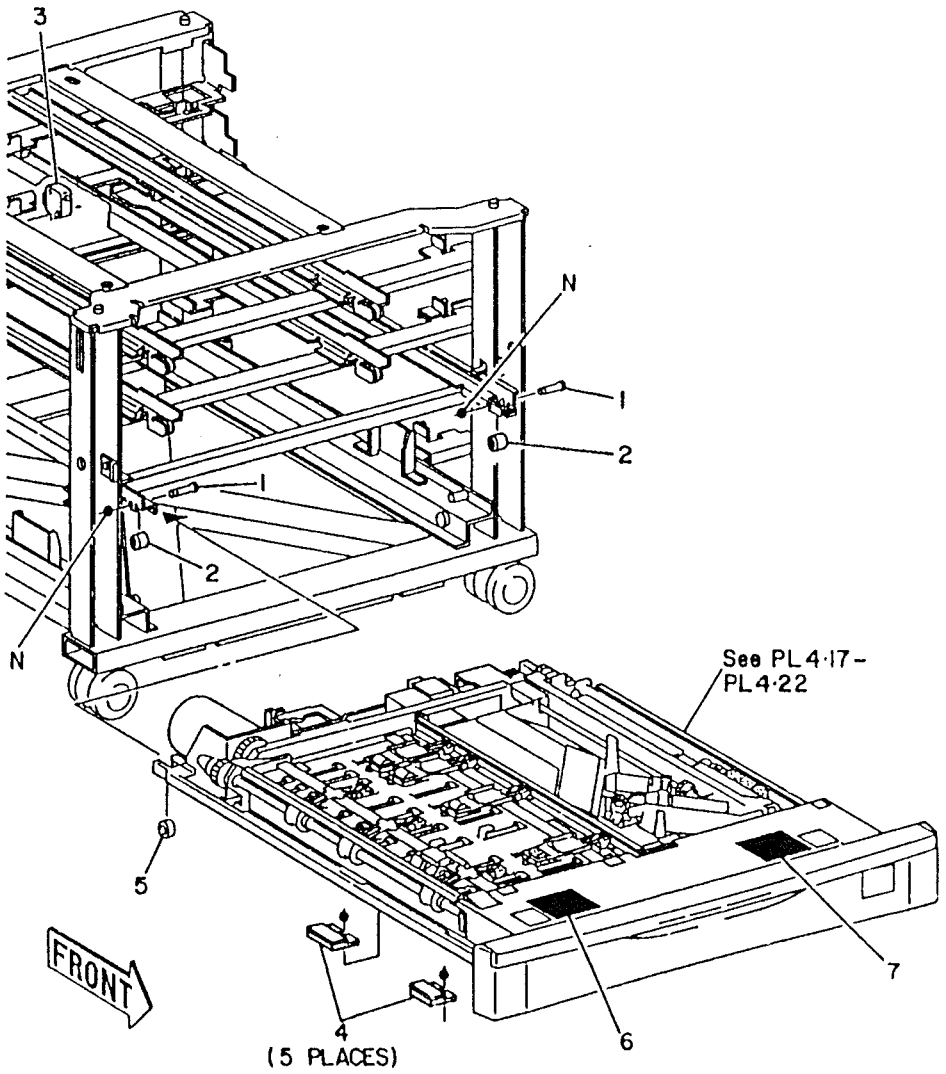

8-8-032-I

PL 4.17 Duplex Tray Drives

Item	Part	Description
1	127K94581	DUPLEX TRAY DRIVE MOTOR (MOT08-060) (REP 8.18)
2	7E83170	GEAR (40T)
3	68K91640	CONNECTOR BRACKET
4	121K93922	TRAY POSITIONING SOLENOID (SOL07-065)
5	12E91860	CAM FOLLOWER
6	5K90952	TRAY POSITIONING CLUTCH ASSEMBLY (REP 10.16)
7	68E5090	GEAR SUPPORT BRACKET
8	--	GEAR SHAFT (NOT SPARED)
9	7P61761	GEAR
10	--	SHOULDER SCREW
11	7E91730	GEAR
12	7E81731	GEAR
13	7E82570	GEAR (28T/28T)
14	7E82580	GEAR (14T/28T)
15	7E82870	GEAR (24T)
16	23E92180	TRANSPORT DRIVE BELT (195T)
17	--	BRACKET (P/O ITEM 18)
18	127K94571	DUPLEX TRAY DRIVE MOTOR ASSEMBLY (MOT08-060) (REP 8.18)
19	68K90910	IDLER ROLLER BRACKET
20	9E92110	SPRING
21	9E28550	SPRING
22	--	IDLER ROLLER ASSEMBLY (NOT SPARED)
23	22E80090	IDLER ROLLER
24	7K91821	GEAR (19T/23T)
25	7E82601	GEAR (13T/44T)
26	23E92190	FEEDER DRIVE BELT (237T)
27	121K91022	DUPLEX TRAY FEED CLUTCH (CL08-065) (REP 8.19)
28	9E26880	SPRING

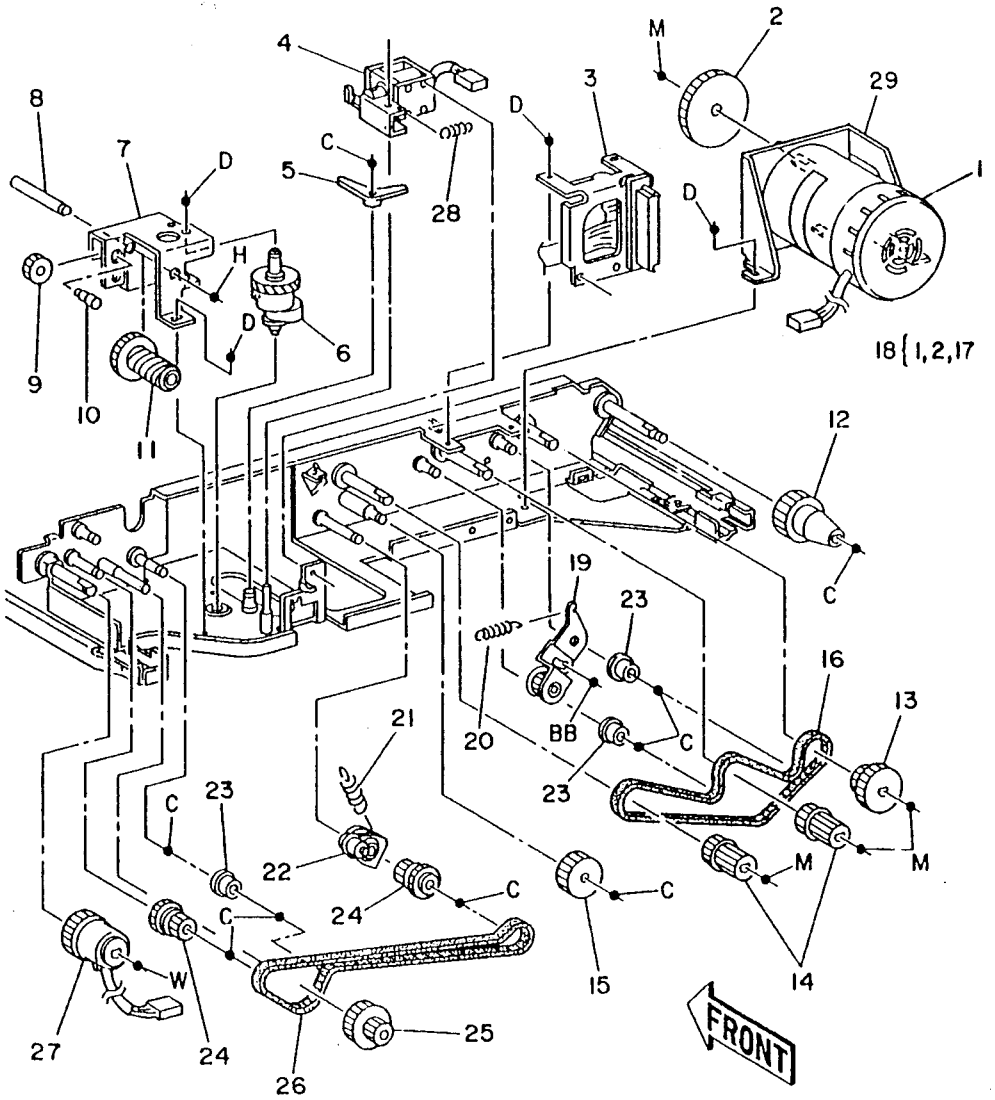

8-8-033-0

PL 4.18 Duplex Tray Feeder

Item	Part	Description
1	22K93360	FEED ROLL (REP 7.8)
2	6E82061	FEED ROLL SHAFT
3	7E82561	GEAR (24T)
4	--	RETARD PAD (REP 7.9) (P/O ITEM 14)
5	13E90660	BEARING
6	13E91220	BEARING
7	7E91860	GEAR (28T)
8	7E91850	GEAR (36T)
9	--	NUDGER ROLL (REP 7.10) (P/O ITEM 14)
10	--	NUDGER LINK (P/O ITEM 13)
11	121K80270	NUDGER ROLL SOLENOID (SOL07-055) (REP 7.11)
12	--	SHAFT (NOT SPARED)
13	121K93932	NUDGER ROLL SOLENOID ASSEMBLY (SOL07-055)
14	600K36570	FEEDER REPAIR KIT

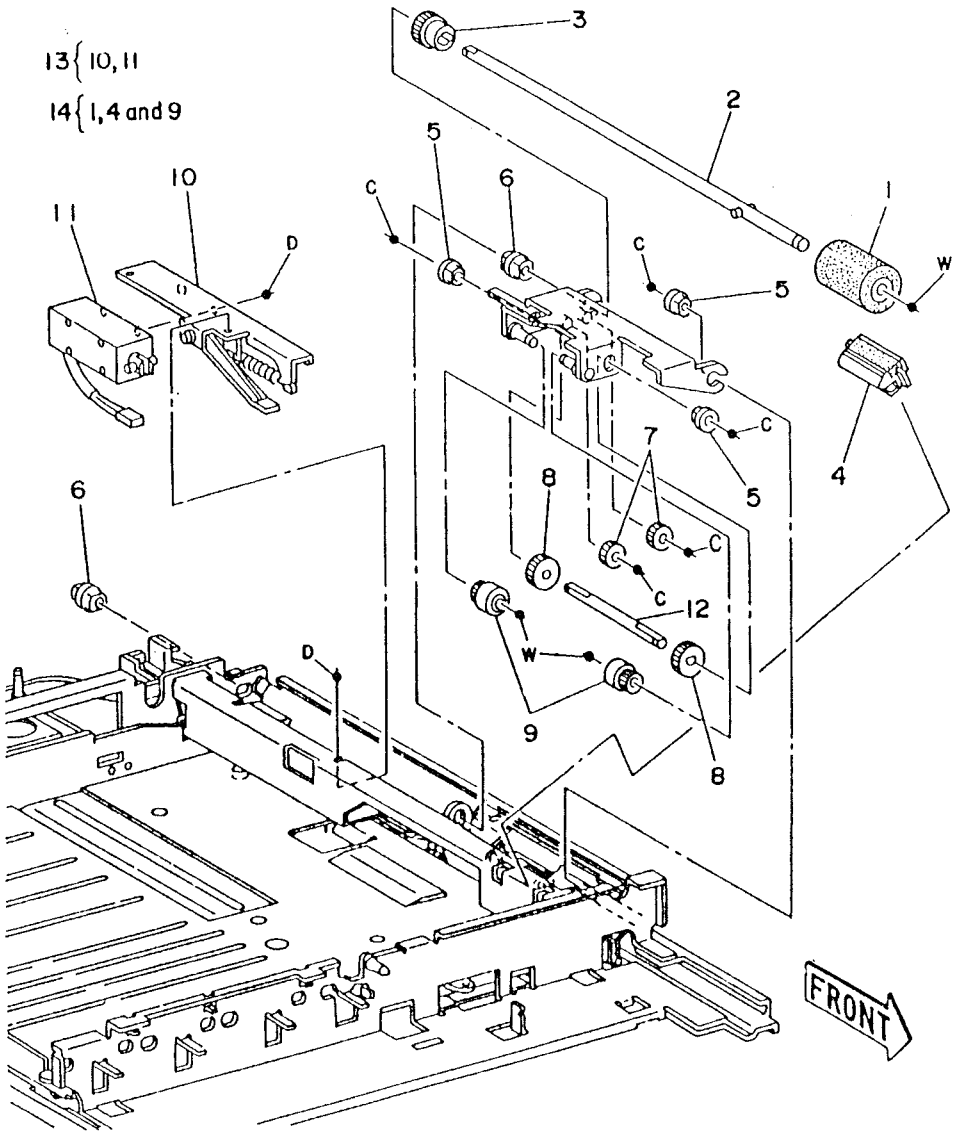

8-8-034-0

PL 4.19 Duplex Tray Paddle Wheel Assembly

Item	Part	Description
1	59K90784	PADDLE WHEEL ASSEMBLY
2	7E82750	GEAR (17T)
3	7E82790	GEAR (24T)
4	7E82740	GEAR (18T)
5	7E82780	GEAR (35T)
6	7K92460	GEAR (18T)
7	--	SHAFT (P/O ITEM 1)
8	--	SHAFT (P/O ITEM 1)
9	--	SHAFT (P/O ITEM 1)
10	12K91082	PADDLE WHEEL LINK
11	33K90210	PADDLE WHEEL (REP 7.12)
12	--	SHAFT (P/O ITEM 1)
13	--	SHAFT (P/O ITEM 1)
14	121K94161	PADDLE WHEEL SOLENOID (SOL07-060)
15	7E82800	GEAR (26T)
16	7E82760	GEAR (18T)
17	13E90660	BEARING
18	91E67740	HANDLE LABEL
19	107K90391	DUPLEX EMPTY SENSOR (Q07-377)
20	120E92120	EMPTY SENSOR ACTUATOR
21	--	PADDLE WHEEL GUIDE (P/O ITEM 1)
22	4E93130	DAMPER
23	55E92640	BAFFLE
24	12E91810	LINK
25	7E83150	GEAR (22T)
26	600K34790	PADDLE WHEEL KIT
27	--	RUBBER WASHER (P/O ITEM 6)

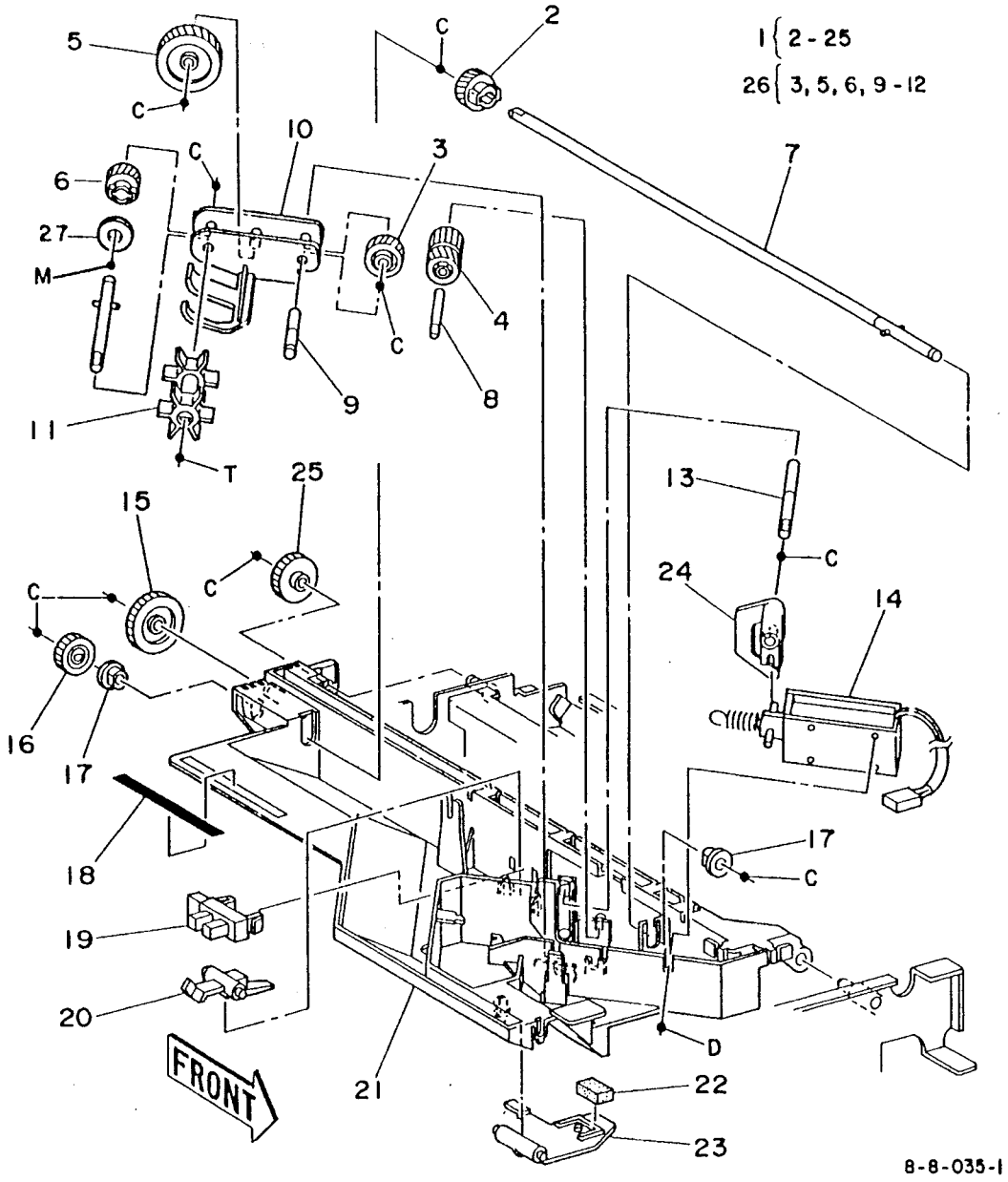

PL 4.20 Duplex Tray Side Guide Assembly

Item	Part	Description
1	--	SIDE GUIDE ASSEMBLY (NOT SPARED)
2	22E91171	SIDE GUIDE ROLLER
3	9E80180	SPRING
4	9E92640	SPRING
5	26E13670	SHOULDER SCREW
6	12E91800	LINK
7	26E92560	SHOULDER SCREW
8	9E31350	SPRING
9	127K80550	SIDE GUIDE MOTOR ASSEMBLY (MOT07-070)
10	--	TRAY SUPPORT LEVER (NOT SPARED)
11	--	ADJUSTER SCREW (NOT SPARED) (ADJ 7.3)
12	130K93470	SIDE GUIDE SENSOR (Q07-380)
13	3E80900	STOPPER
14	12K91140	SIDE GUIDE CABLE (REP 7.13)
15	9E28620	SIDE GUIDE CABLE SPRING

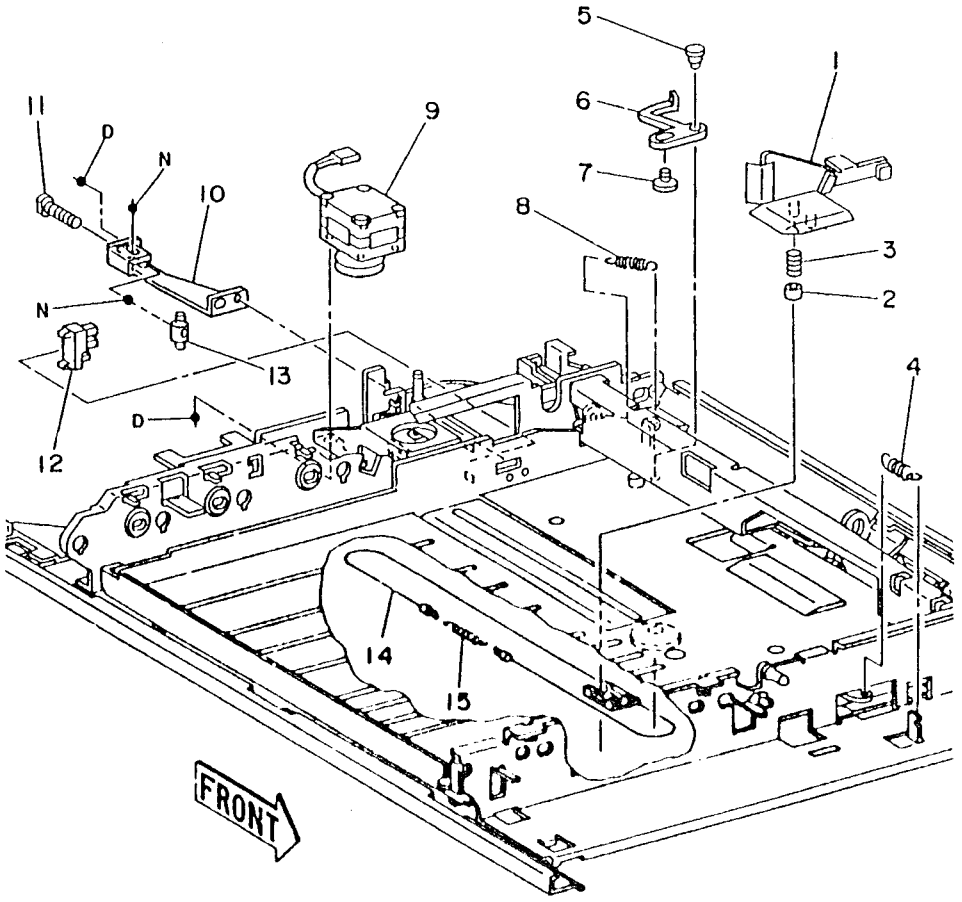

8-8-036-0

PL 4.21 Duplex Tray Entrance and Cover

Item	Part	Description
1	59K93950	PINCH ROLL ASSEMBLY
2	59K91530	PINCH ROLL ASSEMBLY
3	59K91471	PINCH ROLL ASSEMBLY
4	--	GATE LINK (NOT SPARED)
5	130K91180	DUPLEX ENTRY SENSOR (Q10-120)
6	54K2420	DUPLEX TRAY ENTRANCE GUIDE ASSEMBLY
7	9E33441	LATCH SPRING
8	12E92900	FRONT ENTRANCE GATE LINK
9	121K91220	ENTRANCE GATE SOLENOID (SOL10-050) (SOL10-053) (SOL10-055) (REP 10.15)
10	11E90420	LINK
11	3E80610	DUPLEX TRAY HANDLE
12	2K55390	DUPLEX TRAY COVER
13	--	STACK LABEL
14	--	DUPLEX TRAY GUIDE (P/O ITEM 6)
15	9E44551	LATCH SPRING
16	3E19581	INTERLOCK LATCH
17	68E44081	BRACKET
18	11E4641	LEVER
19	121K6680	DUPLEX LATCH SOLENOID (SOL07-080) (REP 7.14)
20	11E4651	LINK
21	--	BRACKET (P/O ITEM 22)
22	121K93950	ENTRANCE GATE SOLENOID ASSEMBLY (REP 10.15)

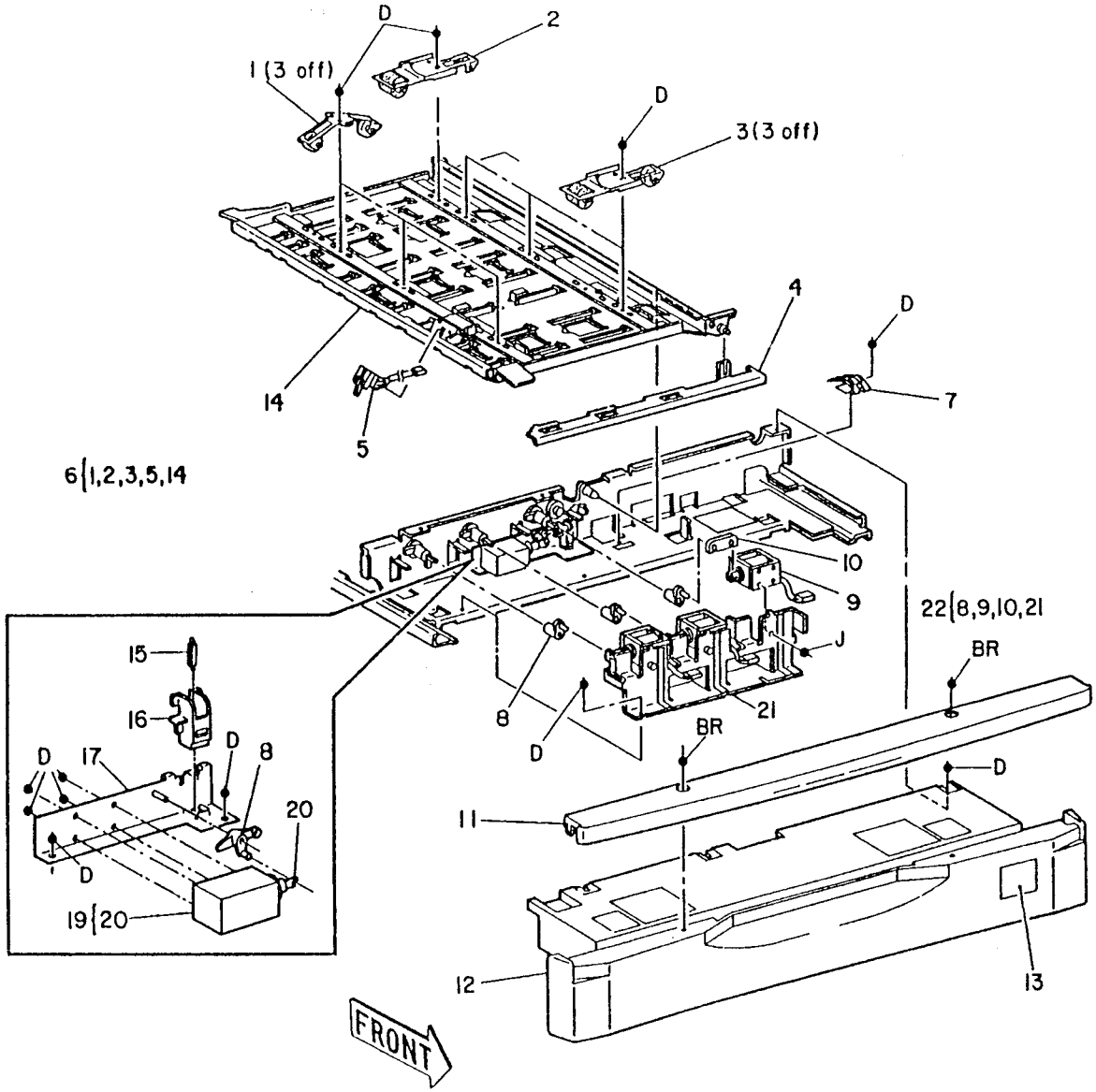

8-8-037-0

PL 4.22 Duplex Tray Entrance Transport

Item	Part	Description
1	59K91030	TRANSPORT ROLLER
2	50K84240	ENTRANCE GATE
3	38E80530	ENTRANCE GATE WEIGHT
4	59K91011	TRANSPORT ROLLER
5	50K84230	ENTRANCE GATE
6	59K91070	TRANSPORT ROLLER
7	59K93910	TRANSPORT ROLLER
8	13E90660	BEARING
9	13E90980	BEARING
10	13E9200	BEARING
11	--	FRONT GATE LINK

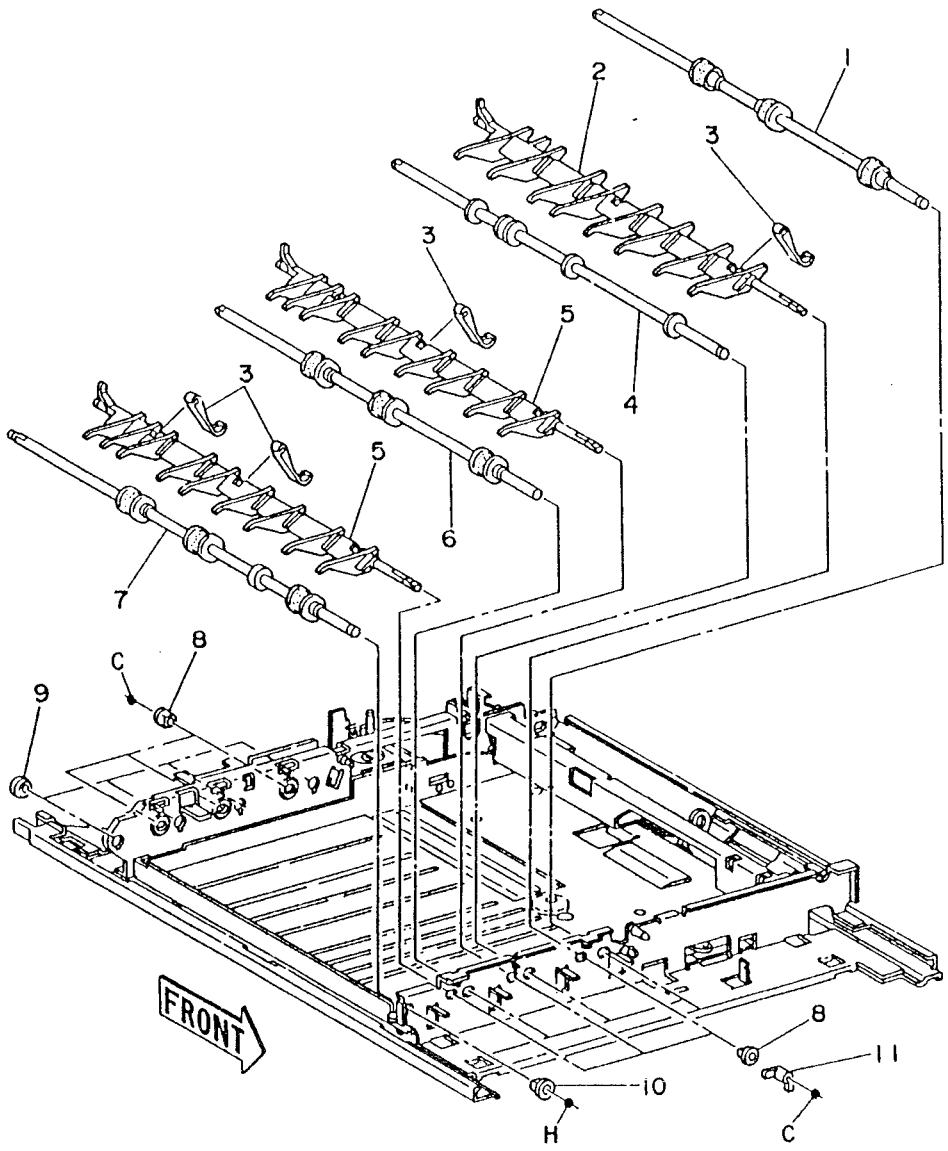

8-8-038-1

PL 4.23A HCF Feeder Assembly (1 of 3)

Item	Part	Description
1	413W29357	BEARING
2	5K90780	FRICTION CLUTCH
3	--	FEED ROLLER (P/O ITEM 10) (REP 7.24)
4	7K6300	RETARD GEAR
5	9E84340	SPRING
6	6E33570	SHAFT
7	7E81810	GEAR (15T)
8	13E8140	BEARING
9	--	PIN (P/O ITEM 17)
10	600K36000	FEEDER ROLLER KIT (REP 7.24)
11	--	NUDGER ROLLER (P/O ITEM 10) (REP 7.24)
12	68K90584	SUPPORT ASSEMBLY
13	117K14131	EARTH WIRE ASSEMBLY
14	130E1913	TRAY EMPTY SENSOR (Q07-366)
15	107K90391	STACK HEIGHT SENSOR (Q07-360)
16	115E3011	EARTH STRIP
17	30K46970	FEEDER SUPPORT ASSEMBLY

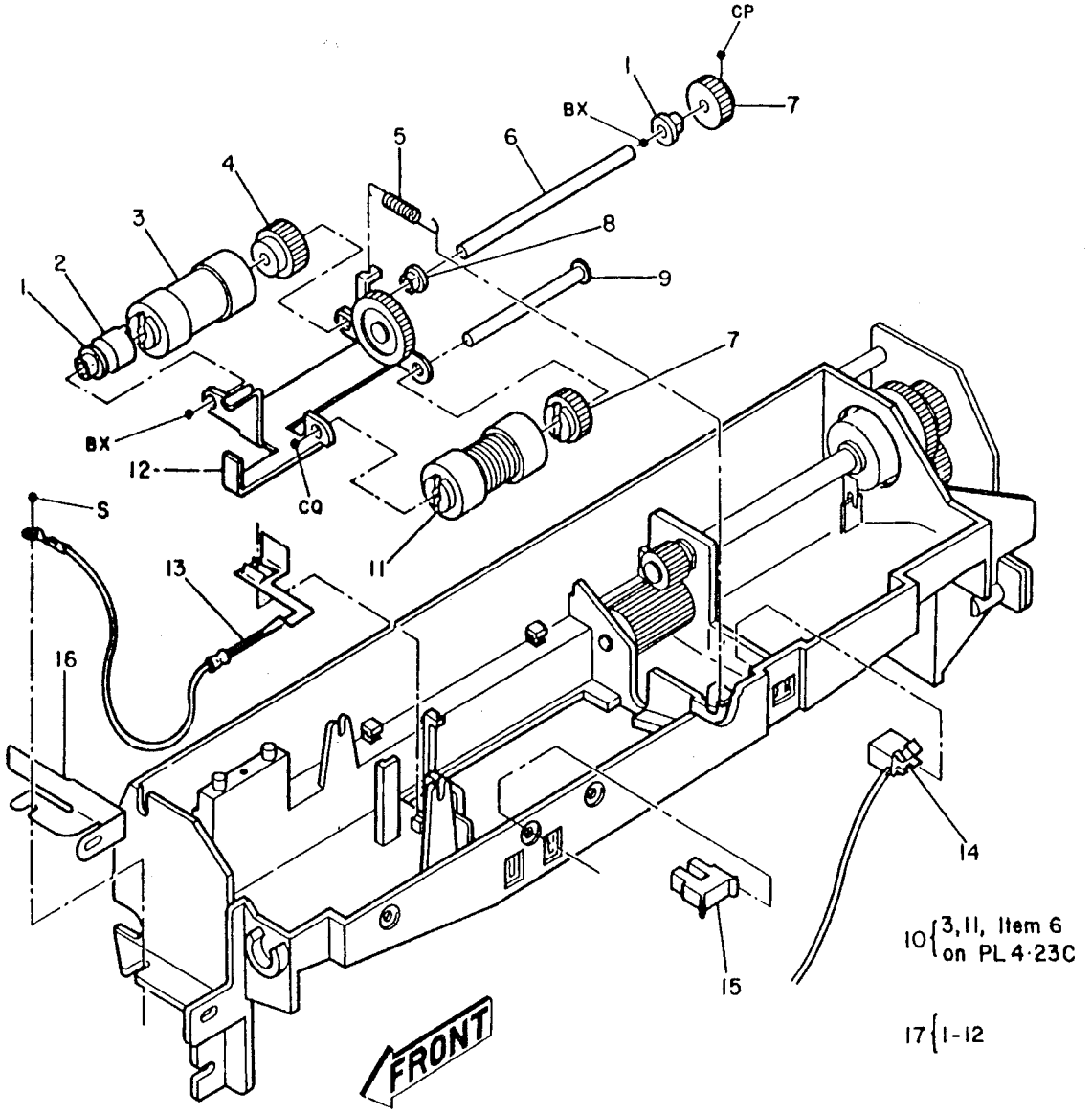

8-8-101-0

PL 4.23B HCF Feeder Assembly (2 of 3)

Item	Part	Description
1	--	GEAR SUPPORT BRACKET
2	--	BEARING
3	7E20161	GEAR (19T)
4	121K5682	HCF FEED CLUTCH (CL08-055) (REP 8.22)
5	6E28222	SHAFT (WITH TAG 11)
6	5K90920	ONE WAY CLUTCH (WITH TAG 11)
7	7E81820	GEAR (15T)
8	--	SHAFT
9	7E20170	GEAR (16T)
10	13E93340	BEARING
11	22K19032	NIP ROLL ASSEMBLY
12	7E18480	GEAR (16T/23T)
13	7E18812	GEAR (23T/24T)
14	5E7831	COUPLING
15	--	SHAFT
16	7E20731	GEAR (23T)
17	23E9621	DRIVE BELT (REP 7.25)
18	7E20240	GEAR (23T)
19	600K34770	HCF FEED CLUTCH (INCLUDE WASHER)
20	413W29457	BEARING

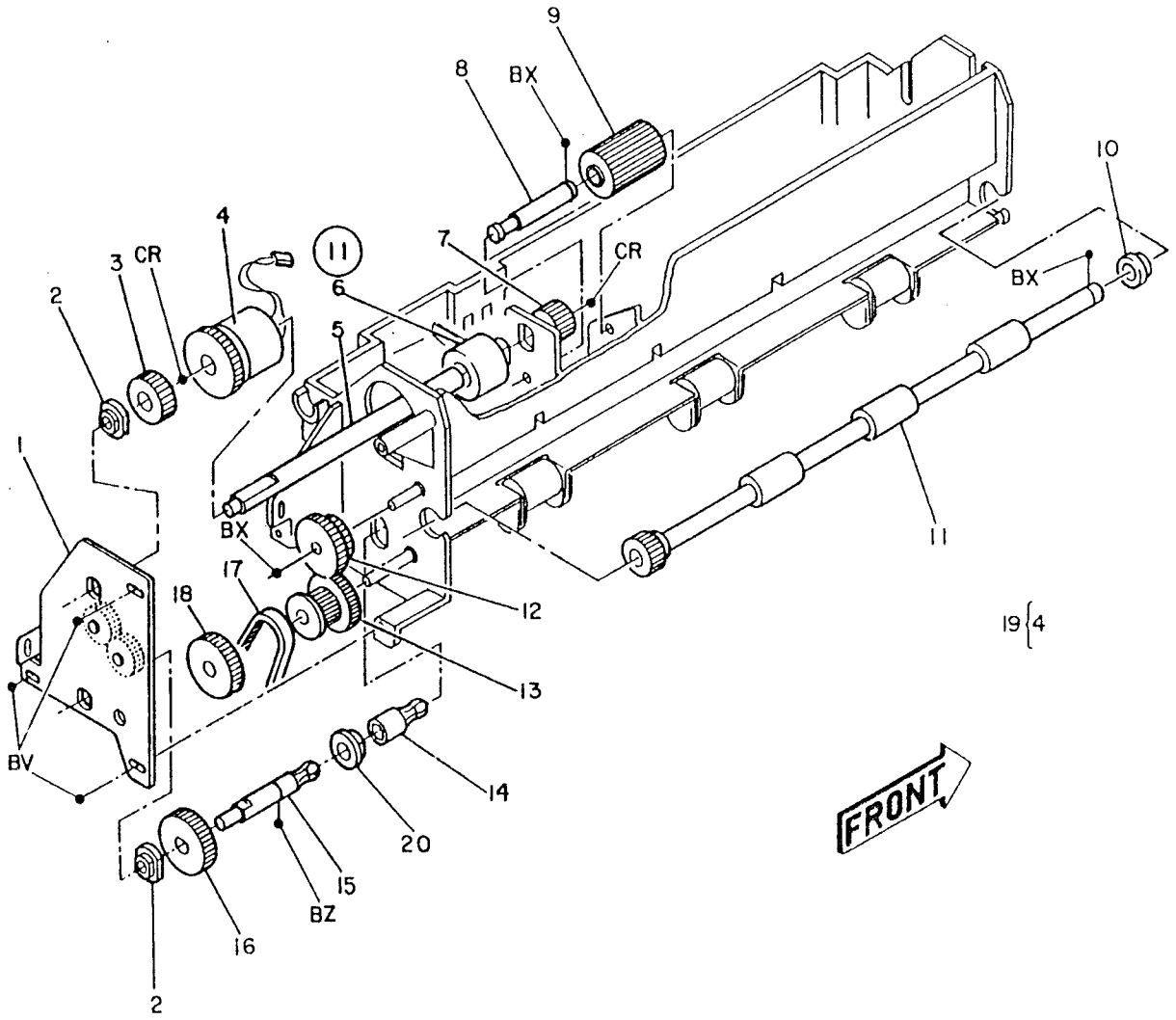

8-8-102-1

PL 4.23C HCF Feeder Assembly (3 of 3)

Item	Part	Description
1	--	LOWER SUPPORT
2	130K91180	FEED SENSOR (Q08-130)
3	13E92890	BEARING
4	--	RETARD SUPPORT
5	9E34212	SPRING
6	--	RETARD ROLLER (P/O ITEM 10 ON PL4.23A) (REP 7.23)
7	--	SPACER
8	5K90970	FRICTION CLUTCH
9	--	SHAFT
10	9E84900	SPRING
11	13E93440	BEARING
12	59K90720	ROLLER
13	5E7831	SLEEVE

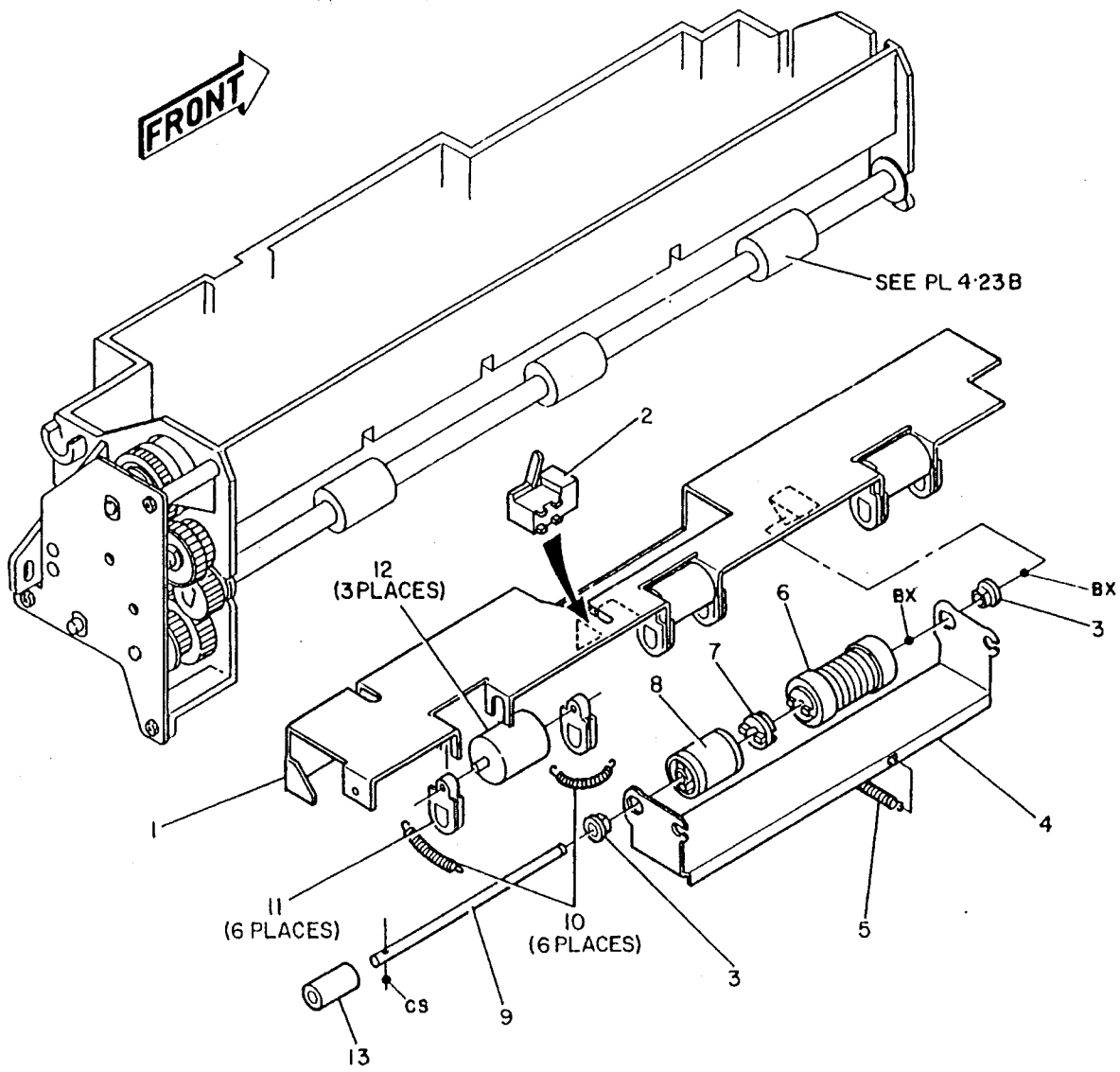

8-8-103-0

PL 5.1 Black Developer Holder Assembly

Item	Part	Description
1	6K92451	HINGE SHAFT ASSEMBLY
2	13K90461	BEARING
3	7E82090	GEAR (18T)
4	5E90542	DEVELOPER RETRACT CLUTCH (CL09-010) (REP 9.14)
5	13E93150	BEARING
6	30E73960	SUPPORT BRACKET
7	6E81490	RETRACT SHAFT
8	113K91031	HOLDER ASSEMBLY
9	10E90230	PLUNGER
10	9E84420	SPRING
11	113K90921	HOLDER
12	13E81130	BEARING PLATE
13	3K92190	KNOB
14	32K90950	DEVELOPER GUIDE ASSEMBLY
15	413W77559	BEARING

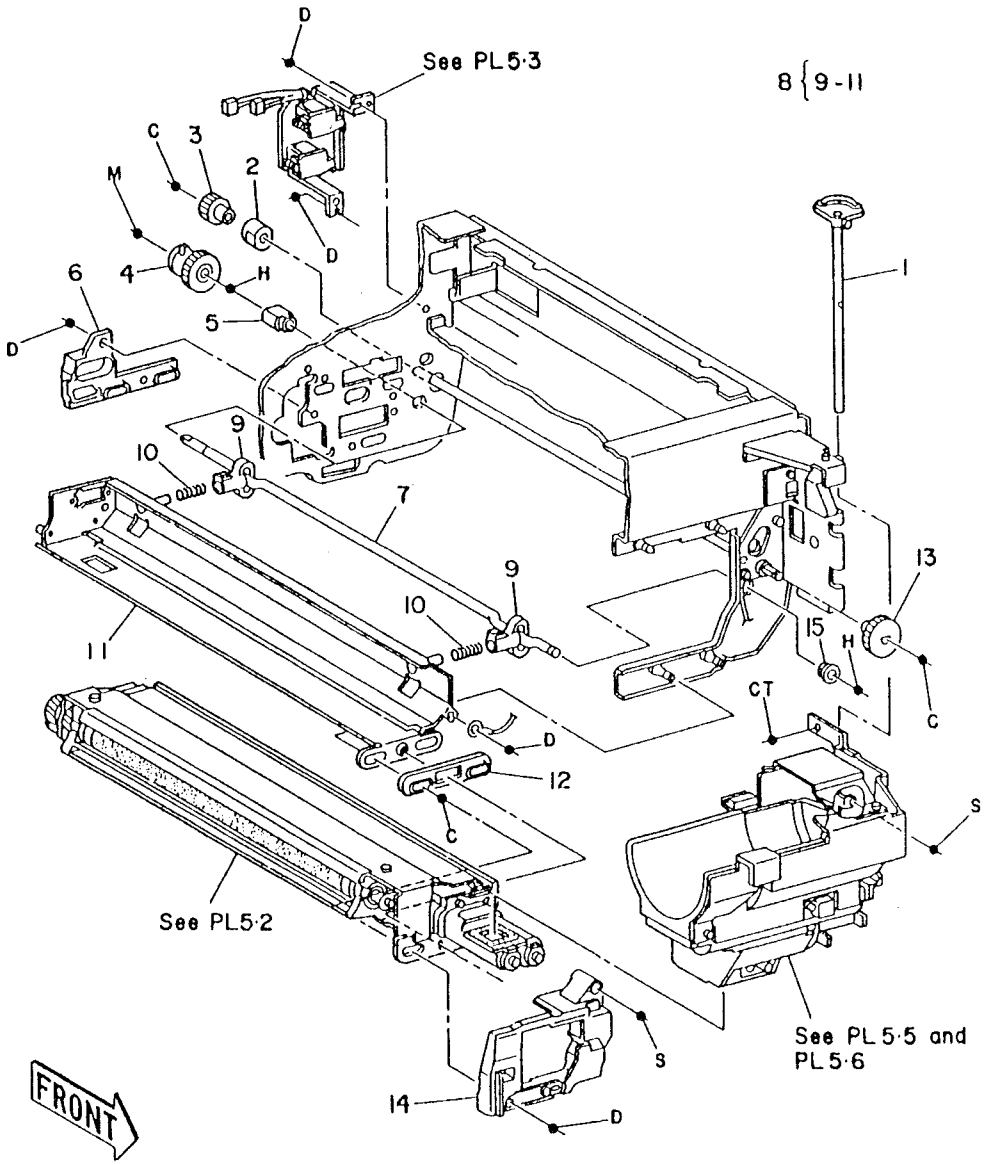

8-8-039-0

PL 5.2 Black Developer Assembly

Item	Part	Description
1	--	BLACK DEVELOPER ASSEMBLY (REP 9.7) (CQ 1.3) (SEE TABLE PL 5.7)
2	--	COVER PLATE (P/O ITEM 1)
3	7E82280	GEAR
4	--	BEARING (P/O ITEM 1)
5	15K94530	GEAR PLATE
6	7E82020	AUGER GEAR
7	7E82030	AUGER GEAR
8	7E82040	PADDLE GEAR
9	7E82050	MAGNET GEAR
10	--	BEARING (P/O ITEM 1)
11	5E91750	COLLAR
12	121K93570	CLEANING (ADJ 9.1)
13	49E90030	PLATE
14	--	DEVELOPER HOUSING (P/O ITEM 1)
15	59K90470	TRACKING ROLL
16	14E26142	SPACER (WITH TAG 13)
17	--	ROD (P/O ITEM 1)
18	--	DEVELOPER ROLL (P/O ITEM 1)
19	--	SEAL BAR (P/O ITEM 1)

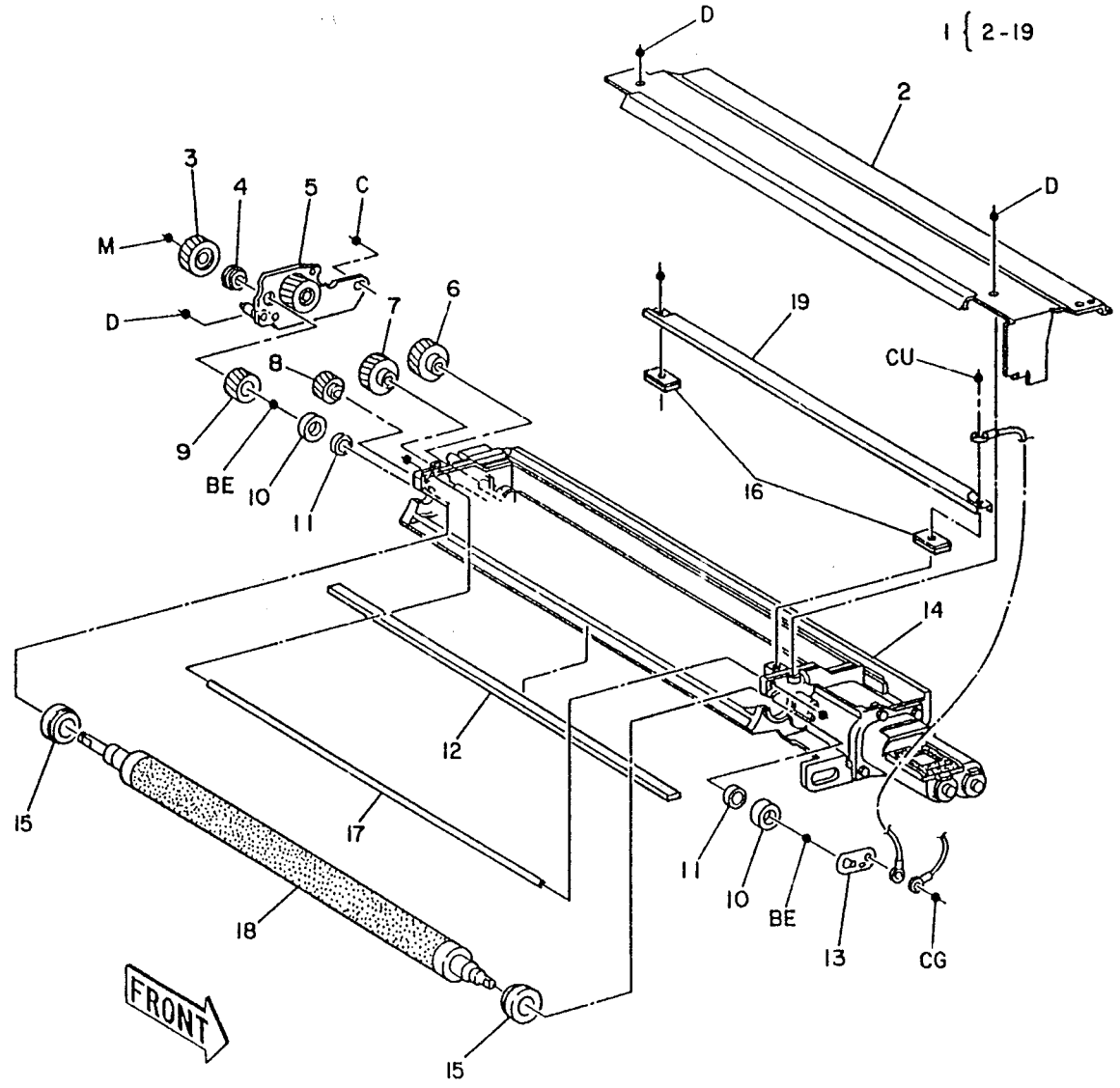

8-8-040-I

PL 5.3 Colour Toner Dispenser Motor and Developer Holder Assembly

Item	Part	Description
1	121E91300	DEVELOPER RETRACT SOLENOID (BLACK OR COLOUR) (SOL09-015) (REP 9.13)
2	13E93150	BEARING
3	5E90542	RETRACT CLUTCH (REP 9.14)
4	127K94480	COLOUR TONER DISPENSER MOTOR (MOT09-045) (REP 9.10)
5	13E93160	BEARING
6	13E93170	BEARING
7	6E81490	RETRACT SHAFT
8	10E90230	PLUNGER
9	9E84420	SPRING
10	113K90822	HOLDER
11	7E82440	GEAR
12	91E68770	LABEL
13	19E91020	CLIP
14	413W77559	BEARING

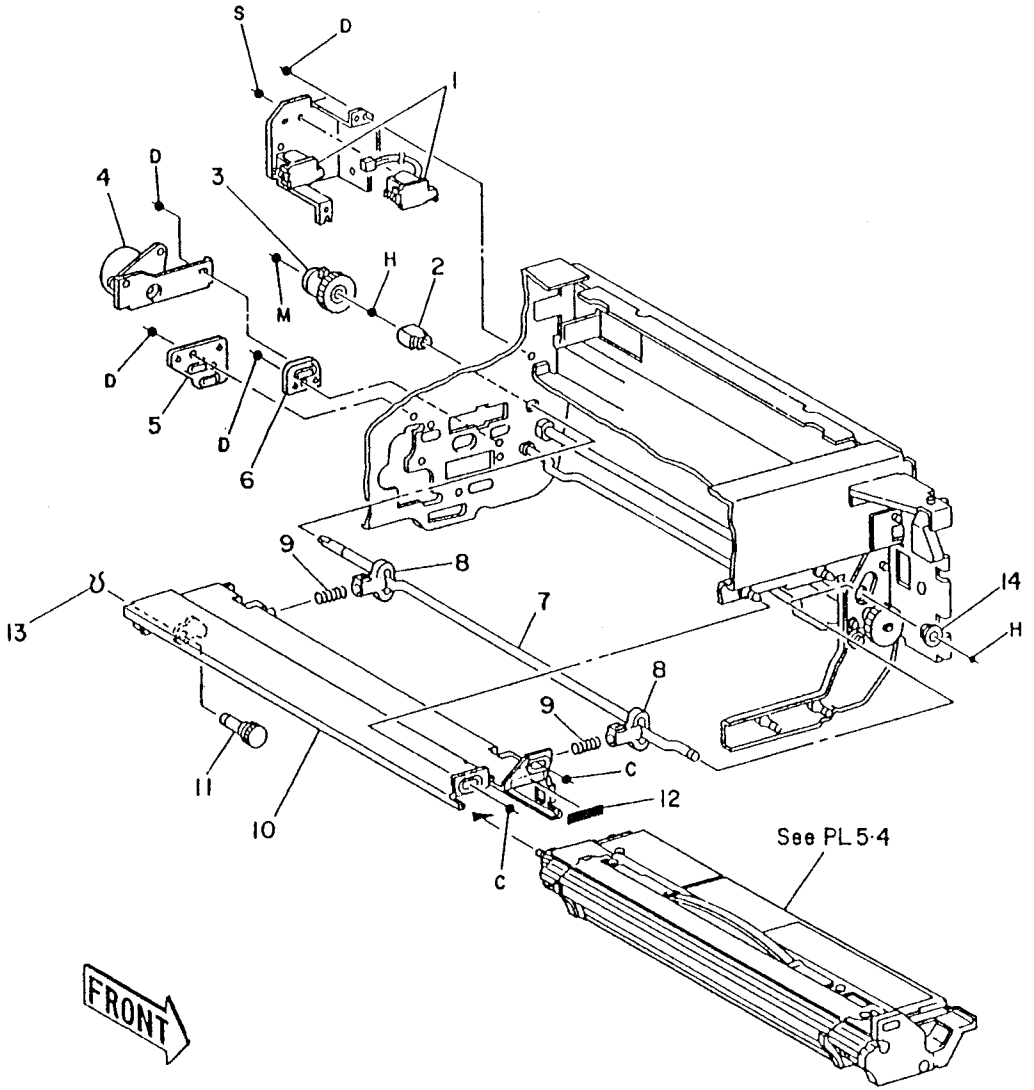

8-8-041-0

PL 5.4 Colour Developer Assembly

Item	Part	Description
1	--	COLOUR DEVELOPER ASSEMBLY (SEE TABLE PL 5.7)
2	3E80480	HANDLE
3	--	PLATE (P/O ITEM 1)
4	--	GEAR (P/O ITEM 1)
5	--	GEAR (30T/13T) (P/O ITEM 1)
6	--	GEAR (22T) (P/O ITEM 1)
7	--	GEAR (24T) (P/O ITEM 1)
8	--	GEAR (22T) (P/O ITEM 1)
9	--	GEAR (20T) (P/O ITEM 1)
10	--	COLLAR (P/O ITEM 1)
11	--	TRACKING ROLL (P/O ITEM 1)
12	121K93780	CLEANING BLADE (ADJ 9.1)
13	--	HANDLE BRACKET (P/O ITEM 1)
14	48K80470	LATCH ASSEMBLY
15	--	COVER (P/O ITEM 1)
16	--	PLATE (P/O ITEM 1)
17	130E91150	COLOUR LOW TONER SENSOR (Q09-320) (REP 9.11)
18	91E68770	LABEL
19	91E68820	LABEL
20	--	LABEL (BROWN)
-	--	LABEL (GREEN)
-	--	LABEL (BLUE)
-	91E68780	LABEL (RED)

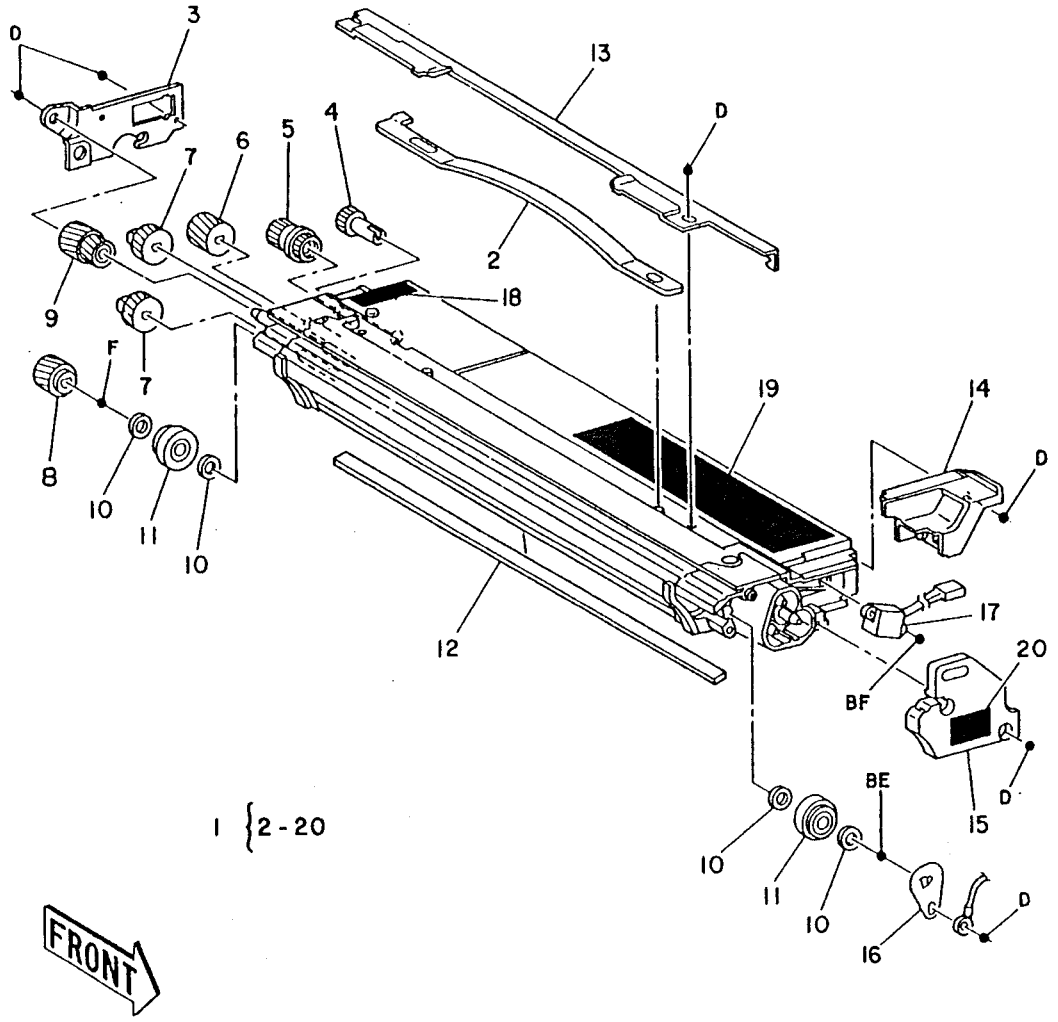

PL 5.5A Toner Housing Assembly (1 2)

Item	Part	Description
1	48K94875	TONER HOUSING ASSEMBLY
2	55K91012	SHUTTER ASSEMBLY
3	48K94842	TONER HOUSING COVER
4	--	TONER CARTRIDGE (BLACK) (SEE PL 5.7)
5	--	PADDLE (P/O ITEM 1)
6	--	AGITATOR GEAR (P/O ITEM 1)
7	--	PADDLE GEAR (P/O ITEM 1)
8	--	AGITATOR GEAR (P/O ITEM 1)
9	--	TONER DISPENSER GEAR (P/O ITEM 1)
10	127K91730	BLACK DISPENSER MOTOR (MOT09-040) (REP 9.9)
11	130E91150	LOW TONER SENSOR (Q09-310)
12	--	SPRING (P/O ITEM 1)
13	49E90482	SHUTTER PLATE
14	--	FRONT AGITATOR (P/O ITEM 1)
15	--	REAR AGITATOR (P/O ITEM 1)
16	59K90370	AUGER

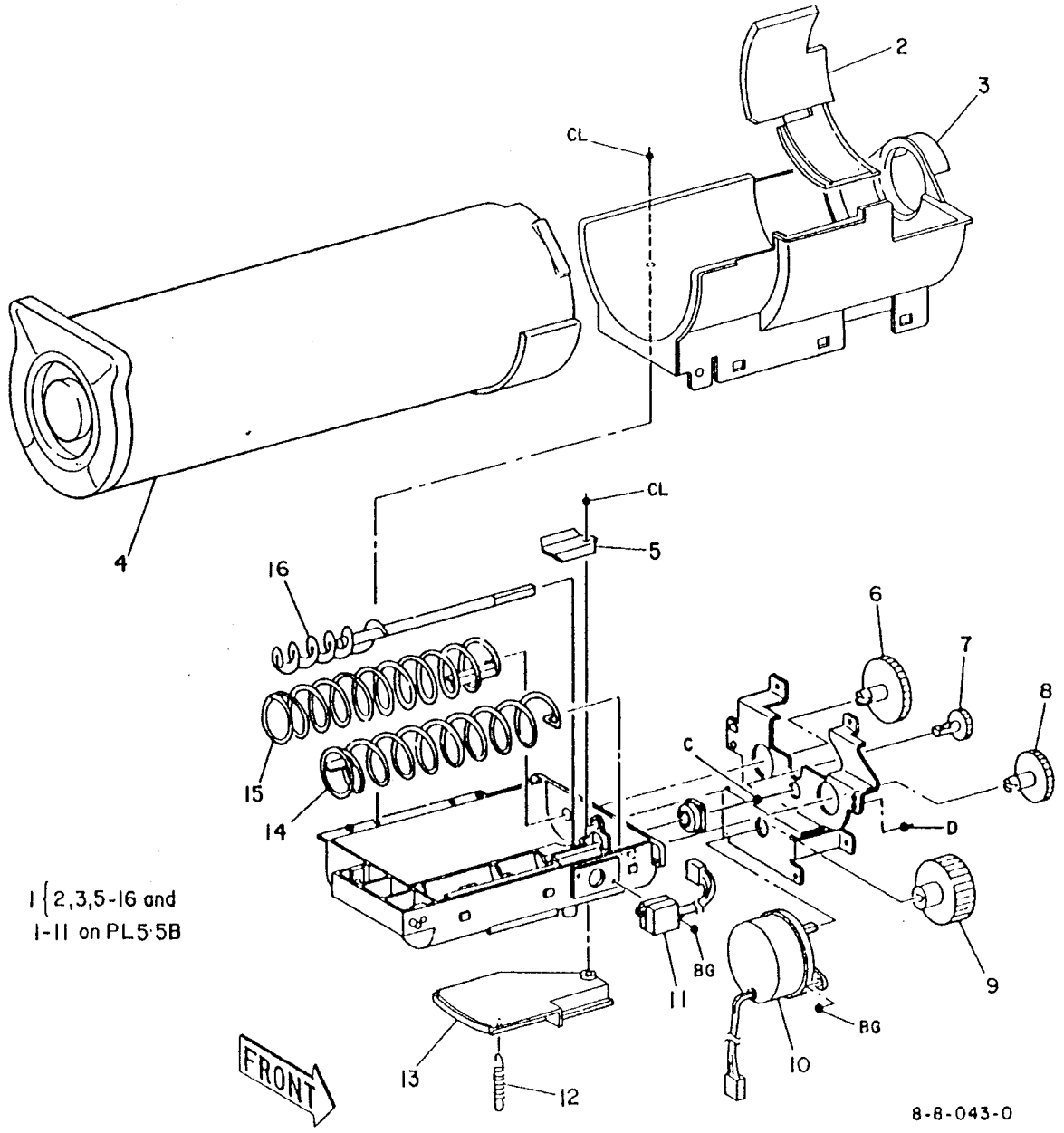

PL 5.5B Toner Housing Assembly (2 of 2)

Item	Part	Description
1	94K90288	TONER HOUSING ASSEMBLY
2	110K92241	TONER CARTRIDGE STATUS SWITCH (S09-315)
3	91E68170	LABEL
4	--	CARTRIDGE BRACKET (P/O ITEM 1)
5	7E82120	AUGER GEAR
6	--	BEARING (P/O ITEM 1)
7	--	TONER HOUSING (P/O ITEM 1 ON PL5.5A)
8	48E90511	TONER COVER
9	101K14870	TONER DISPENSER CONTROL SWITCH (S09-367)
10	48E90760	TONER HANDLE
11	68K90972	TONER CARTRIDGE SUPPORT ASSEMBLY
12	7K91800	AGITATOR GEAR ASSEMBLY
13	7E91250	GEAR (33T)
14	7E82150	GEAR (26/34T)
15	--	CARTRIDGE SUPPORT (P/O ITEM 11)

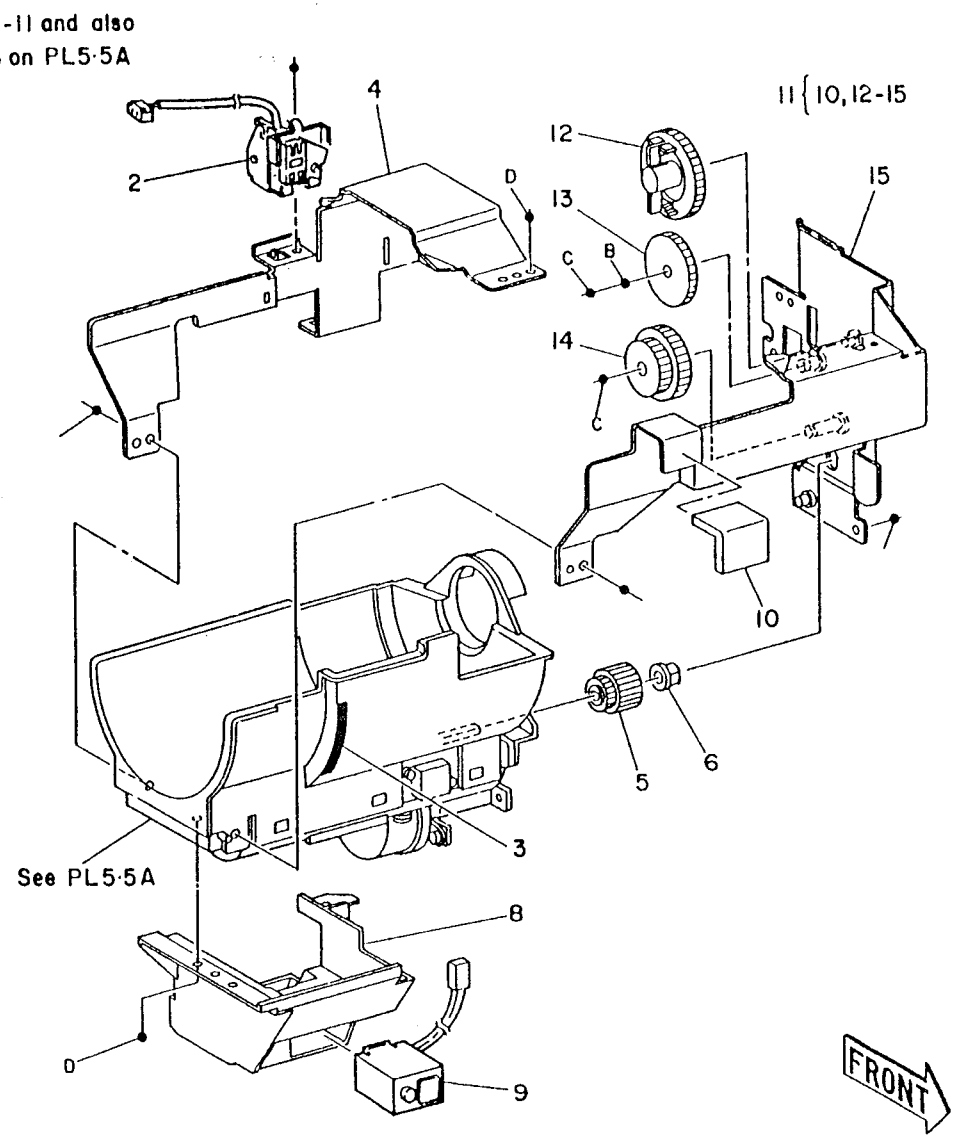

8-8-044-0

PL 5.6 Black Toner Developer Suction Motor

Item	Part	Description
1	52E90410	TUBE
2	53E3460	SUCTION FILTER (REP 9.16)
3	--	PLATE (NOT SPARED)
4	--	TAPE PAD
5	--	SUCTION FILTER BOX (NOT SPARED)
6	52E90680	SUCTION HOSE
7	54E3840	DUCT
8	127K9951	DEVELOPER SUCTION MOTOR (MOT09-032) (REP 9.15)

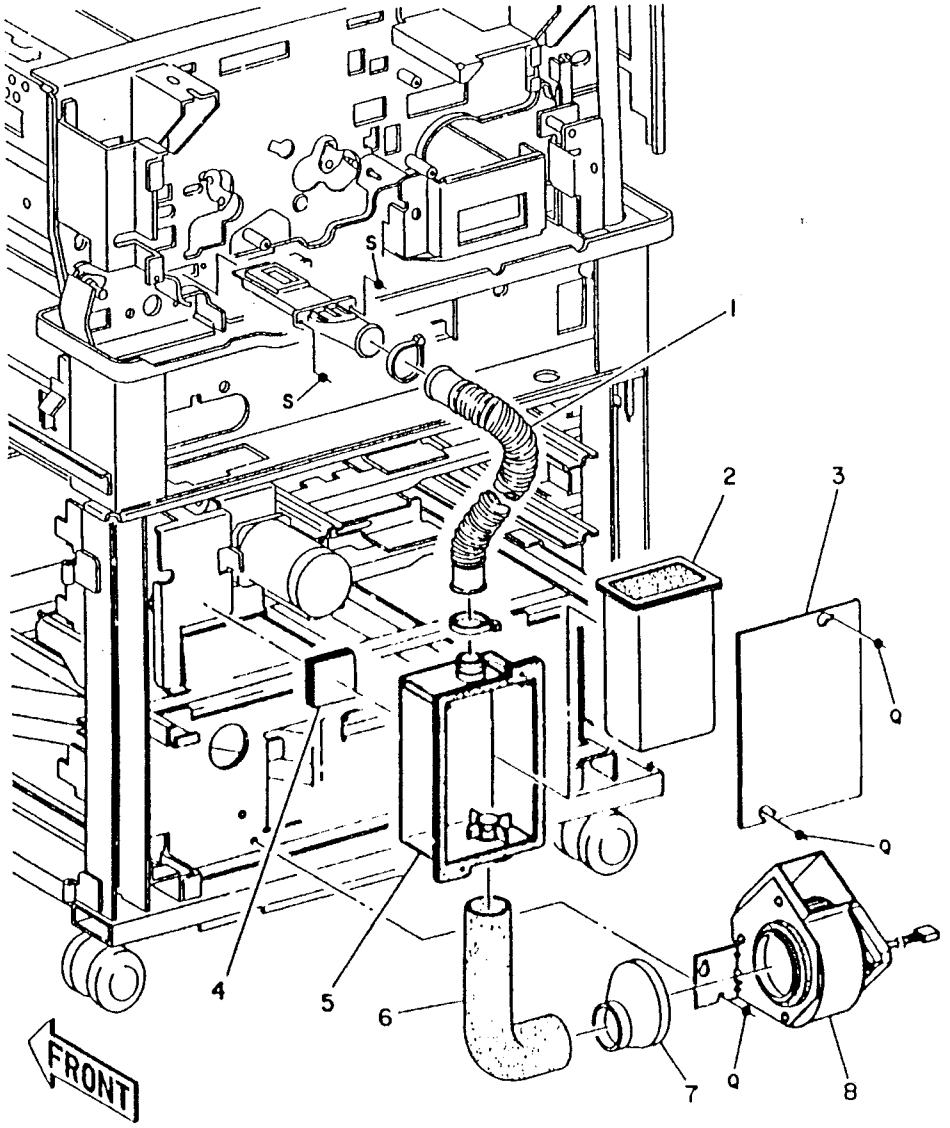

8-8-045-0

PL 5.7 Developer/Toner (Colour) Table

Description	Colour	Parts Number				Weight (grams)
		RX	USCO	XCL	XLA	
DEVELOPER	BLACK	5R90180	5R311	5R556	5R316	800g
TONER		6R90203	6R396	6R583	6R704	700g
DEVELOPER KIT		*NOT AVAILABLE	*NOT AVAILABLE	*NOT AVAILABLE	*NOT AVAILABLE	-
DEVELOPER ASSEMBLY		48K11941 (WITH TAG 13)	48K11941 (WITH TAG 13)	48K11941 (WITH TAG 13)	48K11941 (WITH TAG 13)	-
DEVELOPER	RED	5R206	5R206	5R538	5R285	360g
TONER		6R90183	6R365	6R550	6R375	50g
DEVELOPER KIT		*NOT AVAILABLE	*NOT AVAILABLE	*NOT AVAILABLE	*NOT AVAILABLE	-
DEVELOPER ASSEMBLY		2K33575	2K33494	2K33534	2K33575	-
DEVELOPER	BLUE	5R90163	5R207	5R539	5R286	360g
TONER		6R90184	6R366	6R551	6R376	50g
DEVELOPER KIT		97K91520	97K91480	97K91560	-	-
DEVELOPER ASSEMBLY		2K33584	2K33504	2K33544	2K33584	-
DEVELOPER	GREEN	5R90164	5R208	5R540	5R287	360g
TONER		6R90185	6R367	6R552	6R377	50g
DEVELOPER KIT		97K91530	97K91490	97K91570	-	-
DEVELOPER ASSEMBLY		2K33594	2K33514	2K33554	2K33594	-
DEVELOPER	BROWN	5R90165	5R209	5R541	5R288	360g
TONER		6R90186	6R368	6R553	6R378	50g
DEVELOPER KIT		97K91540	97K91500	97K91580	-	-
DEVELOPER ASSEMBLY		2K33604	2K33524	2K33564	2K33604	-

***NOTE:-** NO KIT FOR BLACK AND RED AS SUPPLIED WITH ALL MACHINES.

8-8-105-1

PL 6.1 ISIL, Erase Lamps, Transfer, Detack Corotrons and ADC Sensor

Item	Part	Description
1	122K90791	ISIL ARRAY (REP 9.6) (ADJ 9.4)
2	--	ISIL ARRAY PLATE (NOT SPARED)
3	113K16000	CHARGES COROTRON LEADS
4	117K16470	TRANSFER/DETACK COROTRON LEADS
5	122K90820	ERASE LAMP
6	68K91852	PRE-TRANSFER LAMP
7	--	BRACKET (NOT SPARED)
8	92E8350	LABEL
9	15E34820	COPY CARTRIDGE LATCH
10	1K19841	COPY CARTRIDGE GUIDE RAIL ASSEMBLY
11	68K90662	GEAR ASSEMBLY
12	130E91010	WASTE TONER SENSOR (Q09-350)
13	15E18740	EARTH PLATE
14	91E69150	LABEL
15	130K93550	ADC SENSOR (Q09-360) (CQ 1.3)
16	20K6330	WHEEL BRACKET ASSEMBLY (WITH TAG 12)
17	--	WHEEL BRACKET (P/O ITEM 16)
18	--	BRACKET
19	--	BEARING
20	--	SHAFT
21	68E68942	COPY CARTRIDGE LATCH BRACKET

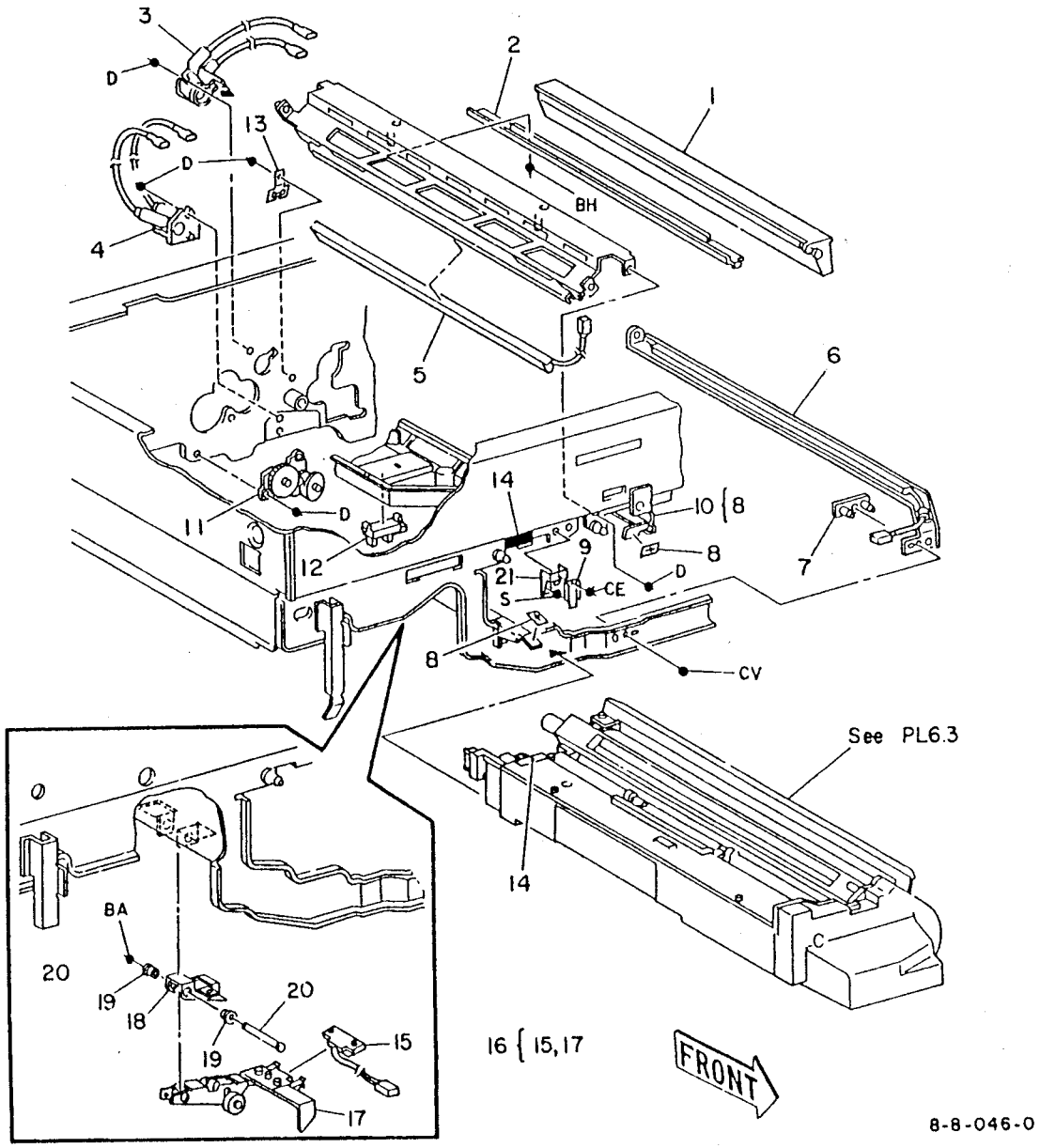

PL 6.2 Transfer Corotron and Detack Corotron Assembly

Item	Part	Description
1	125K2010	TRANSFER AND DETACK COROTRON ASSEMBLY (REP 9.5)
2	55E92870	FRONT ARC SHIELD
3	91E71050	LABEL
4	55E92860	REAR ARC SHIELD
5	32E92301	TRANSFER AND DETACK COROTRON GUIDE
6	9E31760	COROTRON WIRE SPRING
7	117K92100	COROTRON WIRE (REP 9.5)
8	--	FRONT INSULATOR BLOCK (P/O ITEM 1)
9	--	REAR INSULATOR BLOCK (P/O ITEM 1)
10	--	SHIELD (P/O ITEM 1)
11	9E93060	REAR SPRING
12	9E93070	FRONT SPRING
13	54K81340	DUCT ASSEMBLY

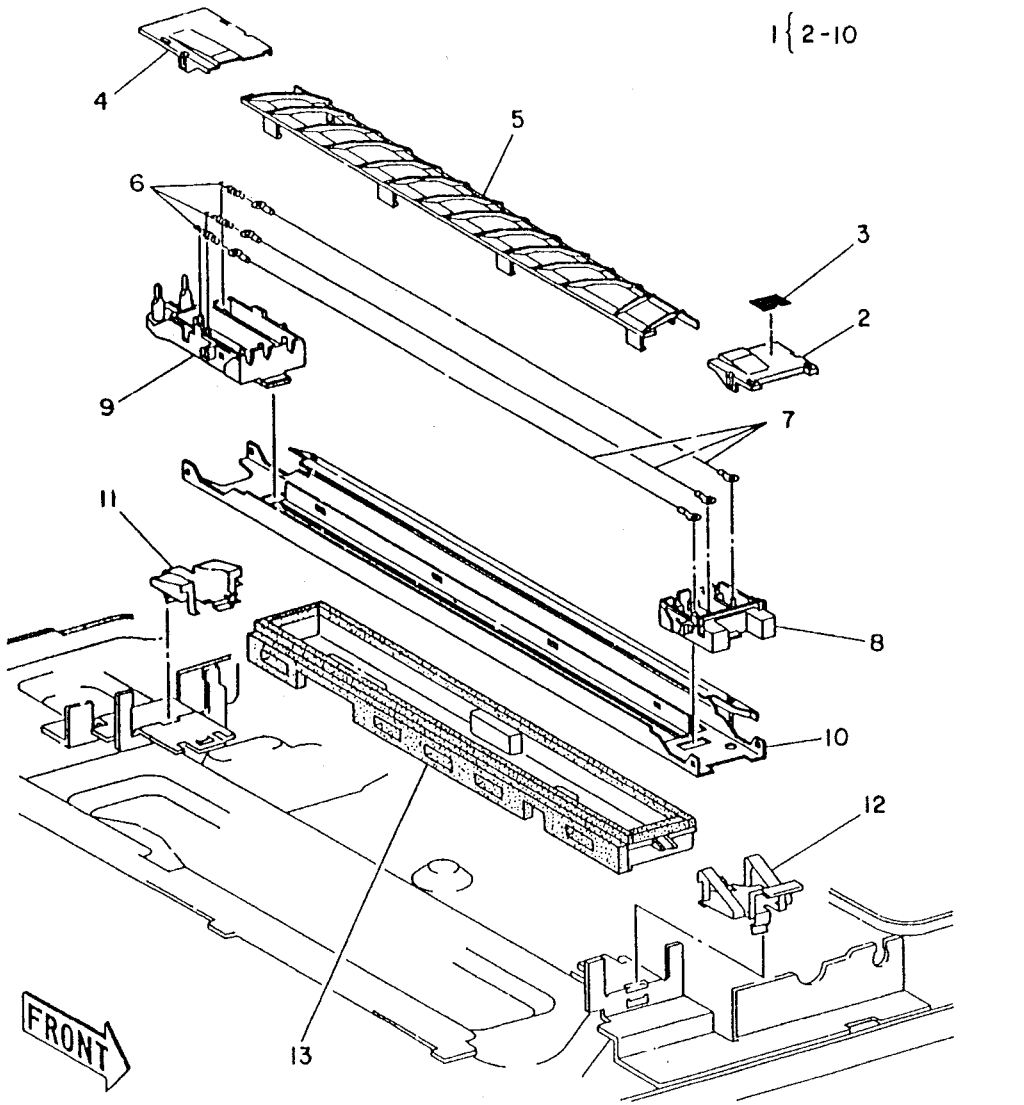

8-8-047-0

PL 6.3 Copy Cartridge and Charge Scorotron Assembly

Item	Part	Description
1	13H71	COPY CARTRIDGE ASSEMBLY (REP 9.2) (CQ 1.3)
2	125K90803	CHARGE SCOROTRON ASSEMBLY (REP 9.4)
3	--	CHARGE SCOROTRON SHIELD (P/O ITEM 2)
4	--	REAR INSULATOR BLOCK (P/O ITEM 2)
5	--	FRONT INSULATOR BLOCK (P/O ITEM 2)
6	55K12910	REAR ARC SHIELD
7	--	FRONT ARC SHIELD (P/O ITEM 2)
8	117K93000	SCOROTRON WIRE (REP 9.4)
9	--	SPRING
10	19K91054	STRIPPER FINGER (REP 9.3) (ADJ 9.1)
11	--	STIPPER FINGER ASSEMBLY (P/O ITEM 1) (REP 9.3)
12	55K12210	SCOROTRON SCREEN
13	152K70820	HARNESS ASSEMBLY (J612/P175)
14	48K80462	TOP COVER ASSEMBLY
15	--	CLEANING BLADE (ADJ 9.1)

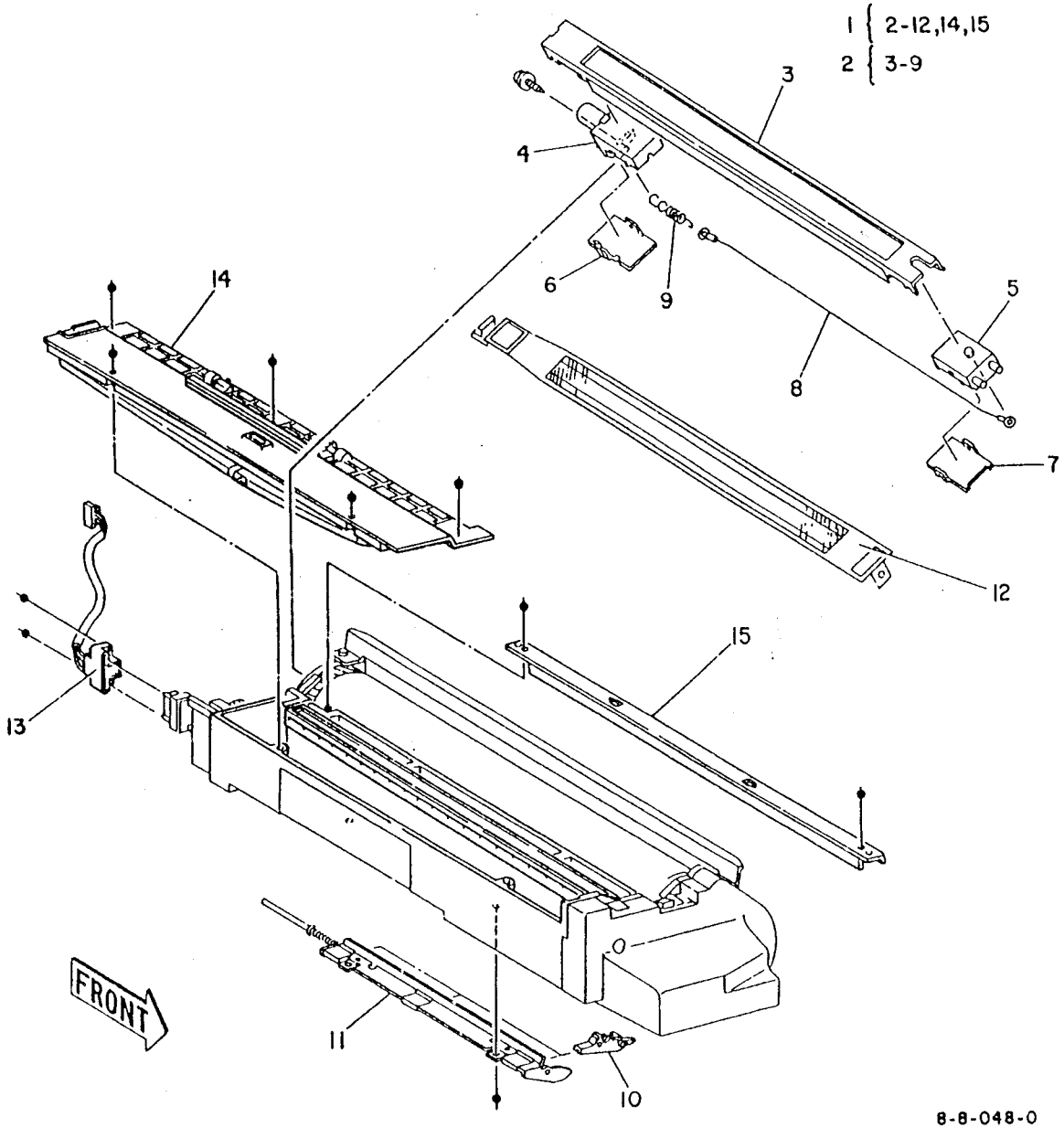

PL 7.1 Vacuum Motor and Duct Assembly

Item	Part	Description
1	54K2350	DUCT
2	--	SEAL (NOT SPARED)
3	54K2380	VACUUM TRANSPORT DUCT
4	54K2360	VERTICAL DUCT ASSEMBLY
5	53E90600	PARTICLE FILTER (REP 10.11)
6	53K90361	OZONE FILTER (REP 10.11)
7	48K94850	FILTER COVER
8	127K10120	VACUUM TRANSPORT MOTOR (MOT10-065) (REP 10.12)

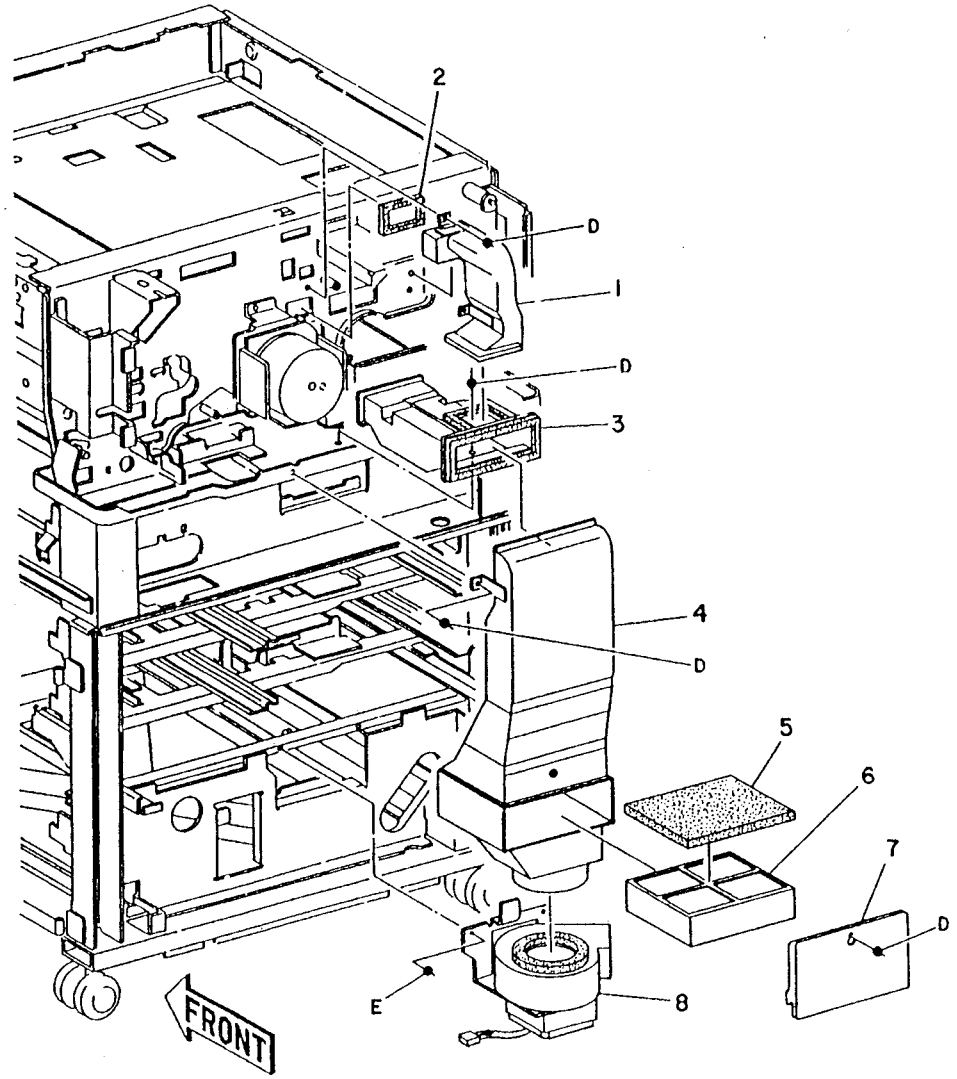

8-8-049-0

PL 7.2 Vacuum Transport Assembly

Item	Part	Description
1	54K81722	VACUUM TRANSPORT ASSEMBLY (REP 10.1)
2	6K92490	SHAFT
3	7E82880	GEAR (25T)
4	13E80040	BEARING
5	13P61393	SNAP BEARING
6	22E94180	IDLER ROLL
7	600K90360	TRANSPORT BELT KIT (QTY.3)
8	--	DUCT PLATE (P/O ITEM 1)
9	413W75959	BEARING
10	6E83260	SHAFT
11	--	VACUUM TRANSPORT HOUSING (P/O ITEM 1)

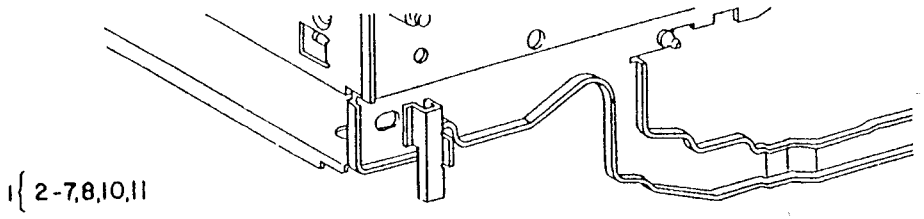

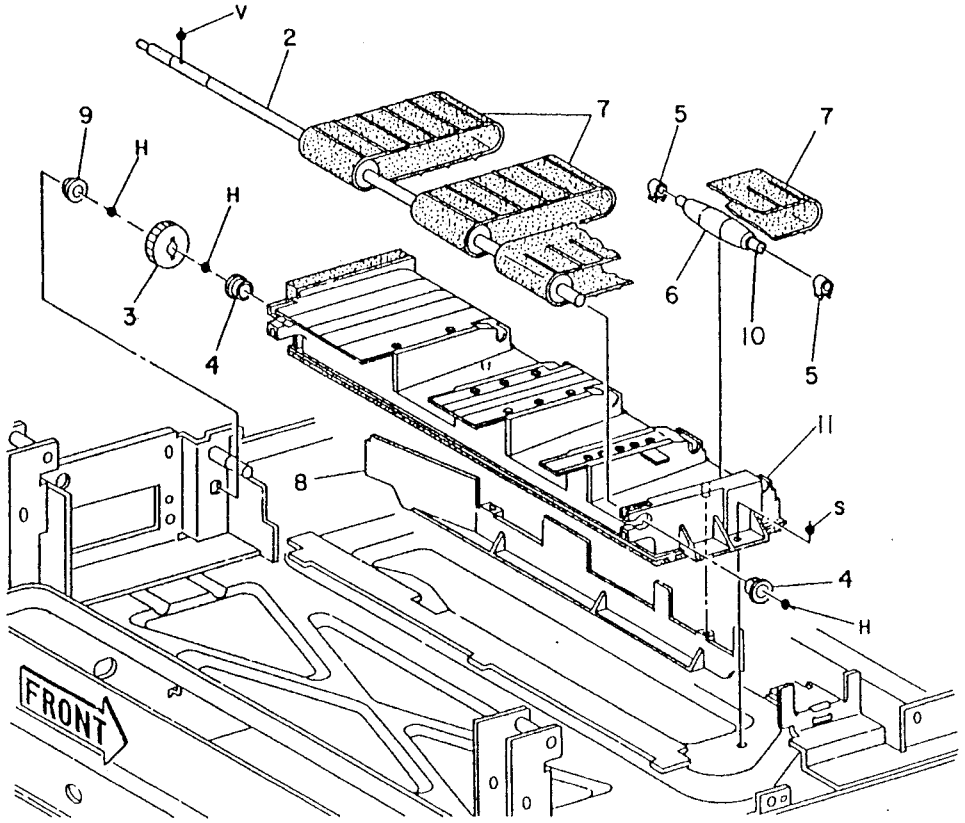

8-8-050-0

PL 7.5 Fuser Web Assembly

Item	Part	Description
1	48K94461	WEB COVER ASSEMBLY
2	9E84380	SPRING
3	13E93060	BEARING
4	11K90992	LEVER ASSEMBLY
5	91P65908	LABEL
6	9E84390	TORSION SPRING
7	48K94612	WEB COVER
8	130K93020	WEB SENSOR (Q10-320) (REP 10.4)
9	91P65793	LABEL
10	--	LABEL
11	59K90322	ROLL
12	8R3913	WEB CASSETTE ASSEMBLY

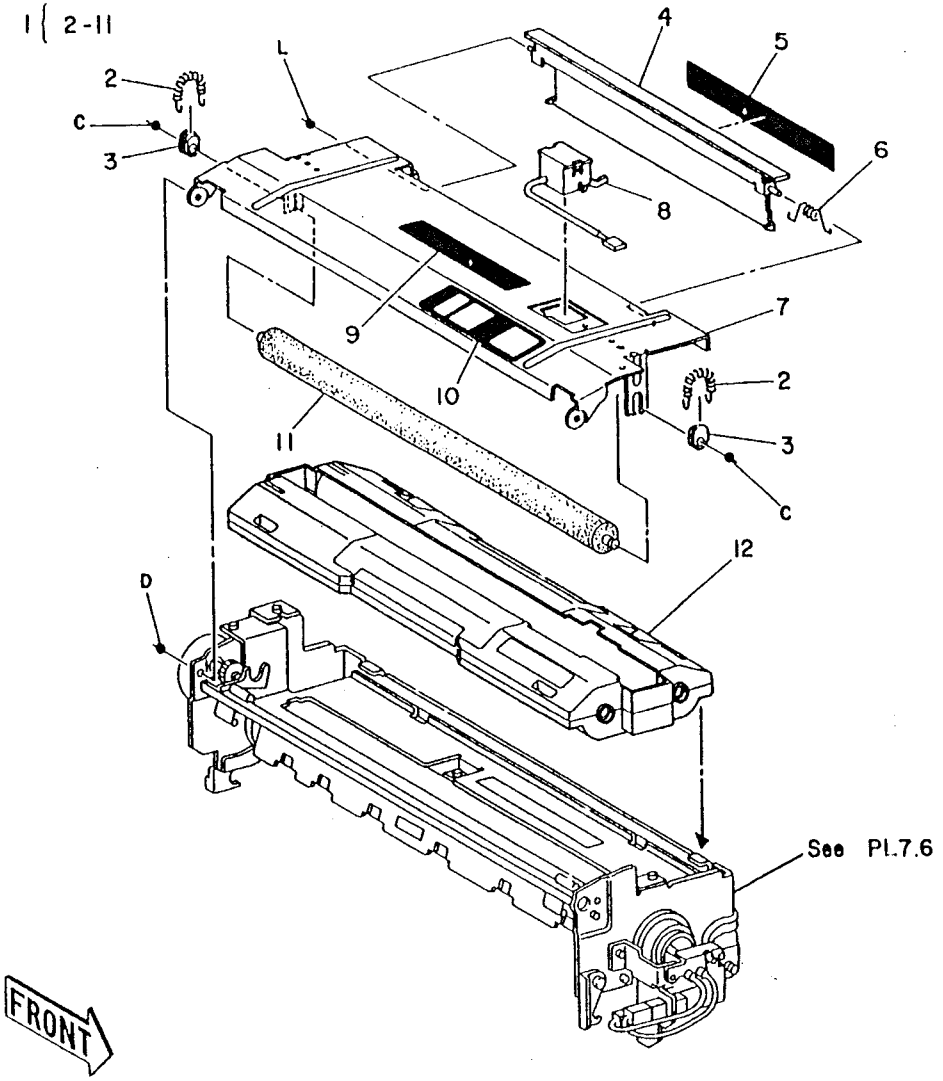

8-8-053-0

PL 7.6 Fuser Drive and Heat Roll

Item	Part	Description
1	127K9322	FUSER WEB MOTOR (MOT10-020) (RX) (REP 10.3)
-	127K9701	FUSER WEB MOTOR (MOT10-020) (USCO/XCL/XLA) (REP 10.3)
2	2K35450	INLET COVER ASSEMBLY
3	48K81620	HEAT ROLL COVER
4	130K93010	OVER HEAT TEMPERATURE SENSOR (Q10-315) (REP 10.8)
5	130K93001	TEMPERATURE SENSOR (Q10-300) (REP 10.8)
6	130E90711	THERMAL CUT OUT (TC10-001) (REP 10.8)
7	--	LABEL
8	91E82530	LABEL
9	7E82390	GEAR (14T)
10	7E82810	UPPER IDLER GEAR
11	7E82820	LOWER IDLER GEAR
12	3E80040	REAR LOCK BRACKET
13	9E27040	PLATE SPRING
14	3E80030	FRONT LOCK BRACKET
15	13E93250	BEARING
16	22K20570	HEAT ROLL ASSEMBLY
17	--	HEAT ROLL GEAR (P/O ITEM 16)
18	--	HEAT ROLL BEARING (P/O ITEM 16)
19	--	HEAT ROLL (P/O ITEM 16) (REP 10.6)
20	--	HEAT ROLL COLLAR (P/O ITEM 16)
21	126E851	HEATER (HTR2) (REP 10.5) (115V)
-	126E871	HEATER (HTR2) (REP 10.5) (230V)
-	126E930	HEATER (HTR2) (REP 10.5) (125V)
22	126E861	HEATER (HTR1) (REP 10.5) (115V)
-	126E881	HEATER (HTR1) (REP 10.5) (230V)
-	126E940	HEATER (HTR1) (REP 10.5) (125V)
23	--	STAR WHEEL ASSEMBLY (P/O ITEM 2) (ADJ 10.3)

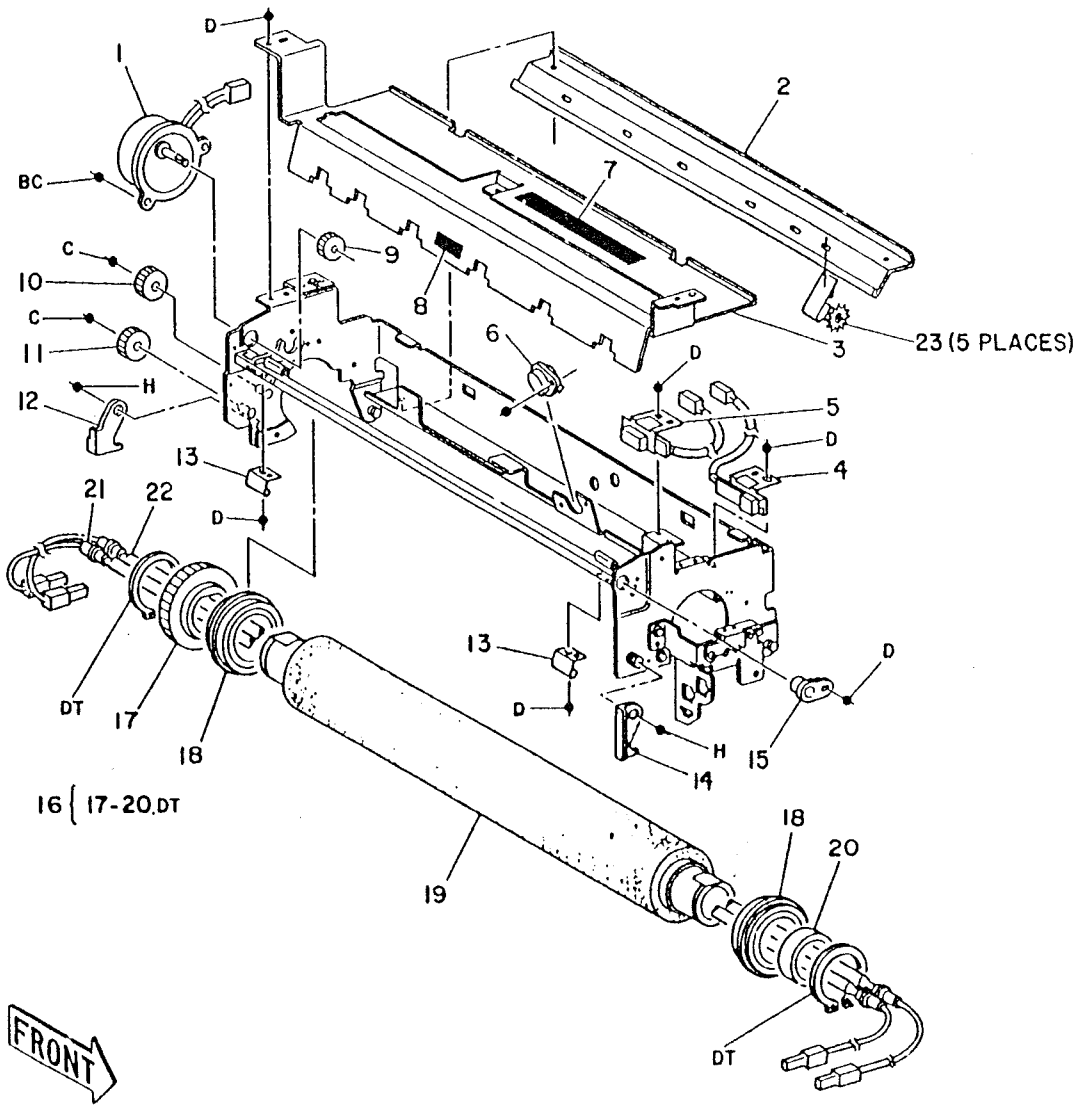

8-8-054-0

PL 7.3 Fuser Module Assembly and Fuser Interlock Switch

Item	Part	Description
1	9K90521	SPRING ASSEMBLY
2	1K20550	FUSER RAIL
3	126K2770	FUSER MODULE ASSEMBLY (115V USCO/XCL) (REP 10.2)
-	126K2780	FUSER MODULE ASSEMBLY (230V RX/XLA) (REP 10.2)
-	126K3140	FUSER MODULE ASSEMBLY (125V XLA) (REP 10.2)
4	710W1370	FUSER INTERLOCK SWITCH (Q10-350)

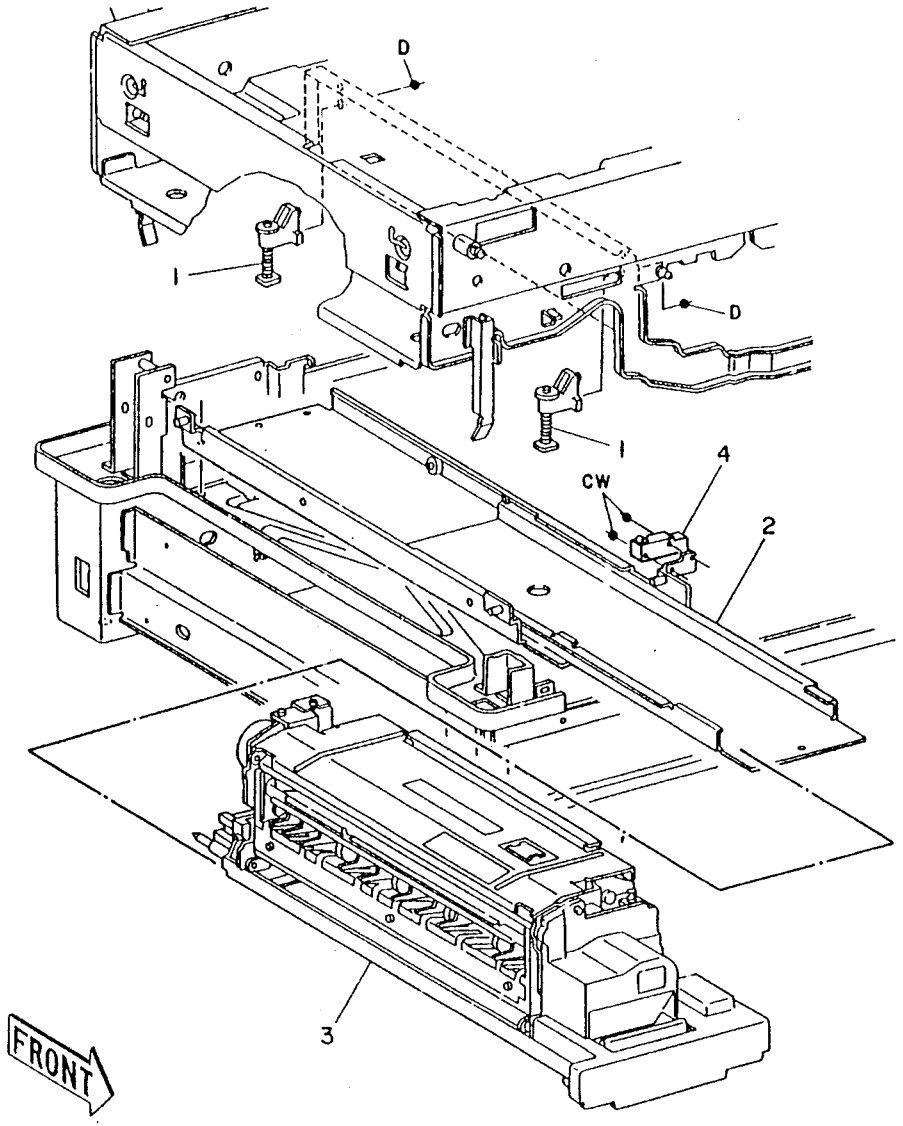

8-8-051-0

PL 7.4 Fuser Module Covers and Harness Assembly

Item	Part	Description
1	2E40991	FRONT HEATER COVER
2	--	LABEL (P/O ITEM 1)
3	21E90900	REAR HEATER CAP
4	--	CONNECTOR BRACKET (P/O ITEM 3 ON PL 7.3)
5	--	FUSER HARNESS ASSEMBLY (P/O ITEM 3 ON PL 7.3)

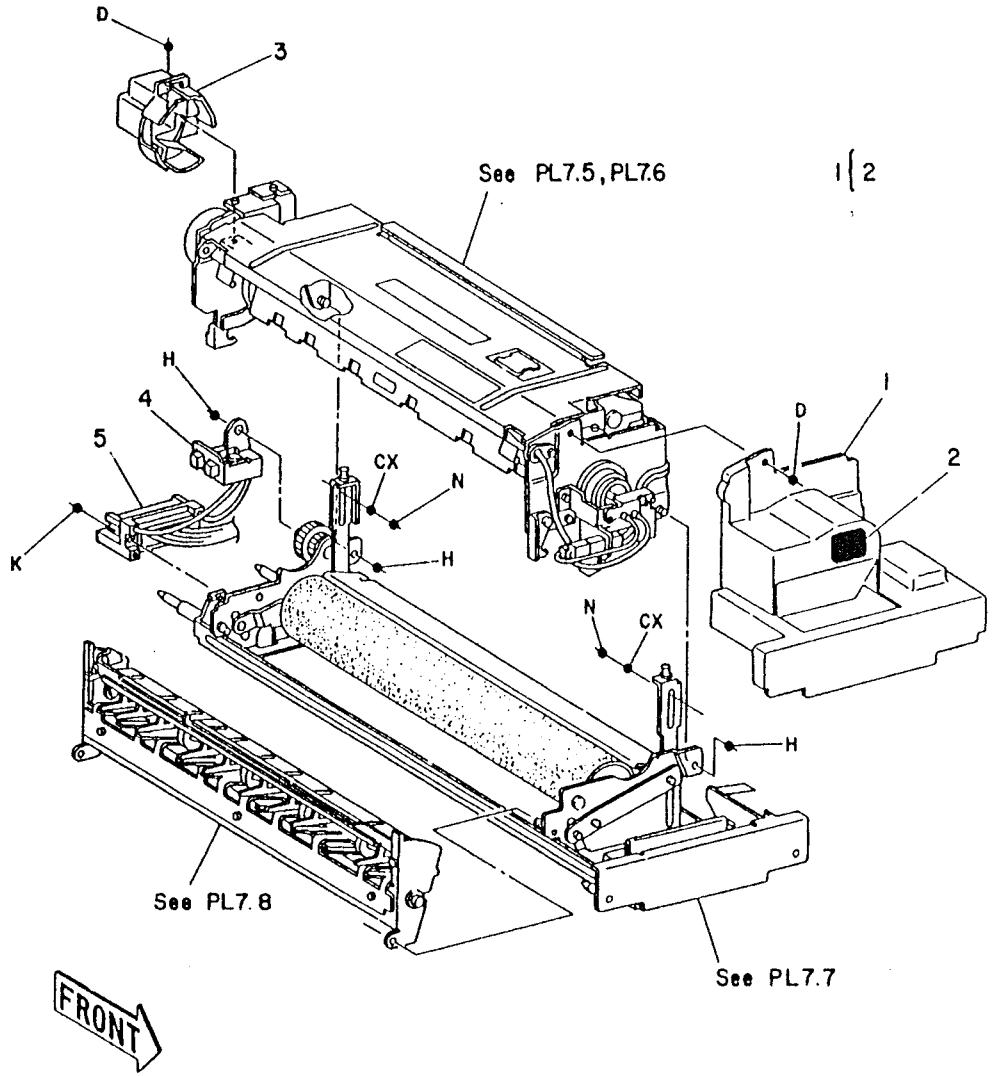

8-8-052-0

PL 7.7 Fuser Pressure Roll

Item	Part	Description
1	22K32191	PRESSURE ROLL (REP 10.7)
2	7E82830	GEAR (30/22T)
3	--	INLET GUIDE
4	--	REAR LIFT LEVER (P/O ITEM 3 ON PL7.3)
5	11E91340	LEVER
6	9E84140	SPRING
7	3E80070	FUSER INNER LOCK
8	--	FRONT LIFT LEVER (P/O ITEM 3 ON PL7.3)
9	3K91720	FUSER LOCK ASSEMBLY
10	9E84150	SPRING
11	3E80060	FUSER HANDLE
12	6E81350	LOCK SHAFT
13	--	FUSER BASE PLATE (P/O ITEM 3 ON PL 7.3)

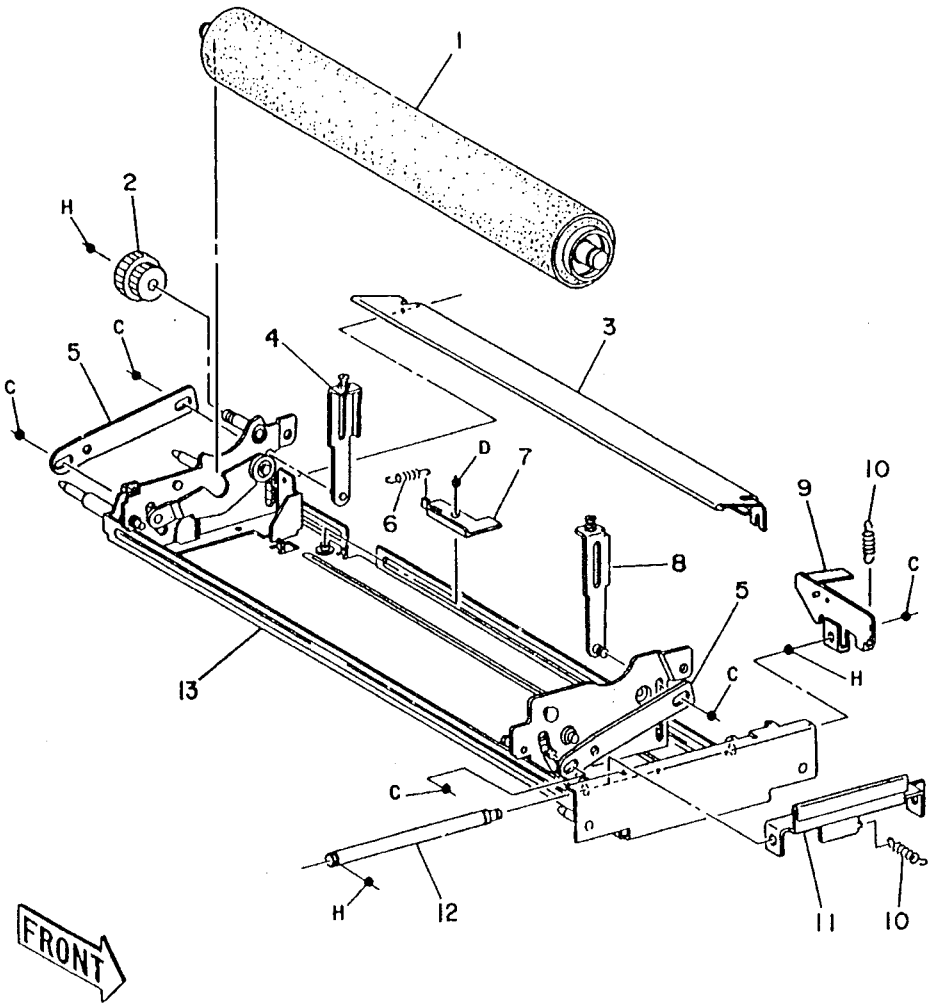

8-8-055-0

PL 7.8 Feedout Guides

Item	Part	Description
1	--	FEEDOUT GUIDE (P/O ITEM 3 ON PL7 3)
2	9E27030	REAR TORSION SPRING
3	3E80970	REAR LOCK BRACKET
4	3K91730	LOCK BRACKET
5	3E80960	FRONT LOCK BRACKET
6	9E27020	FRONT TORSION SPRING
7	15K94410	PLATE ASSEMBLY
8	9E84150	SPRING
9	--	PLATE (P/O ITEM 1)
10	110K91850	COPY OUTPUT SWITCH (S10-100) (REP 10.10)
11	--	CLAMP (SEE ITEM 2 ON PL18.3)
12	9P61902	SPRING
13	600K36680	HEAT ROLL STRIPPER FINGER (REP 10.9) (QTY.5)
14	22S63112	NIP ROLL
15	9P61903	SPRING
16	59K90140	INNER NIP ROLL
17	9E93240	SPRING
18	7E81840	GEAR (18T)
19	--	FRAME (P/O ITEM 1)
20	54K80551	FEEDOUT GUIDE ASSEMBLY
21	9E82320	SPRING
22	600K36690	PRESSURE ROLL STRIPPER FINGER (REP 10.9) (QTY.6)
23	--	PIN (P/O ITEM 1)
24	--	FEEDOUT GUIDE (P/O ITEM 1)

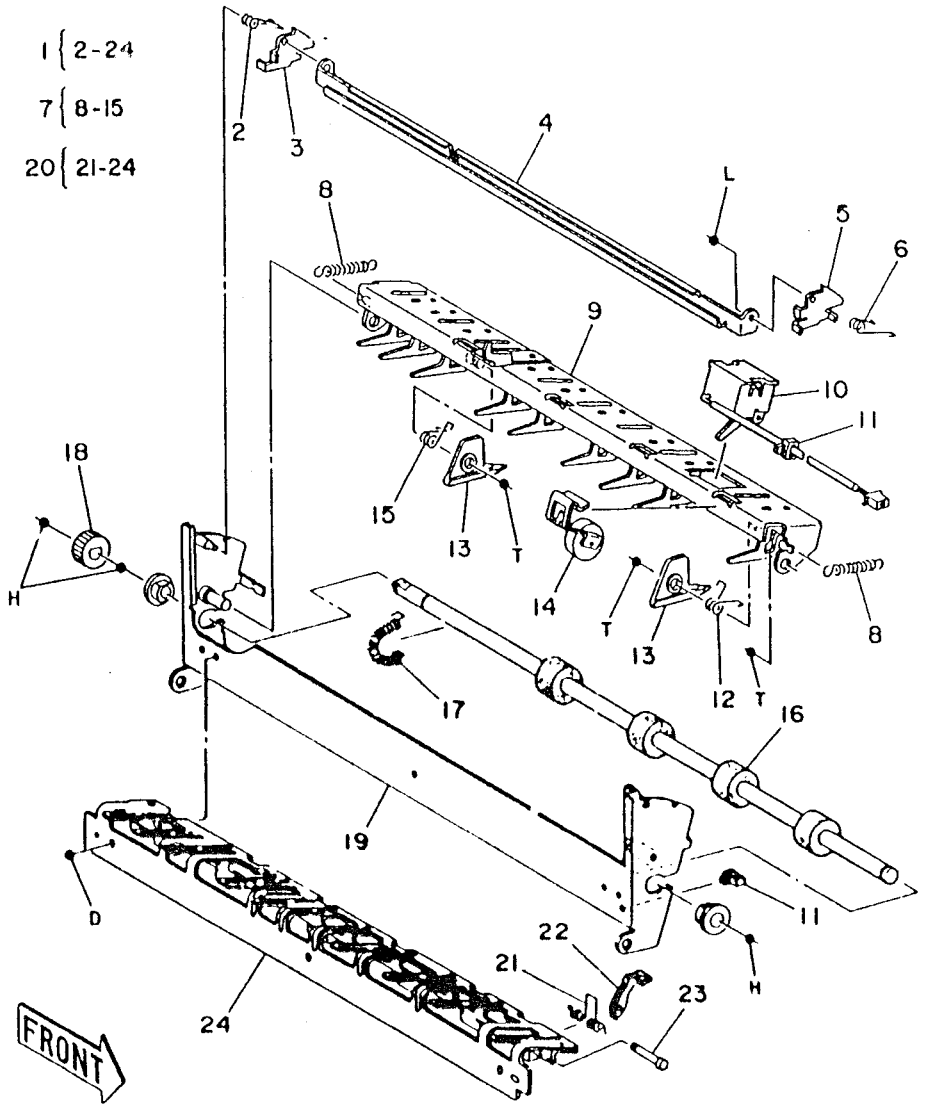

PL 7.9A Decurler Assembly (1 of 3)

Item	Part	Description
1	54K2771	UPPER OUTPUT GUIDE ASSEMBLY
2	59K93940	NIP ROLL
3	105E92020	STATIC ELIMINATOR
4	19E93161	PAD
5	--	UPPER OUTPUT GUIDE (P/O ITEM 1)
6	2K61272	COVER
7	121E8860	MAGNET INTERLOCK
8	--	SAFETY PLATE (NOT SPARED)
9	22K27511	OUTPUT TRANSPORT ASSEMBLY (REP 10.13)
10	50K101623	OUTPUT TRAY
11	29E91880	PIN
12	12E92160	PLATE

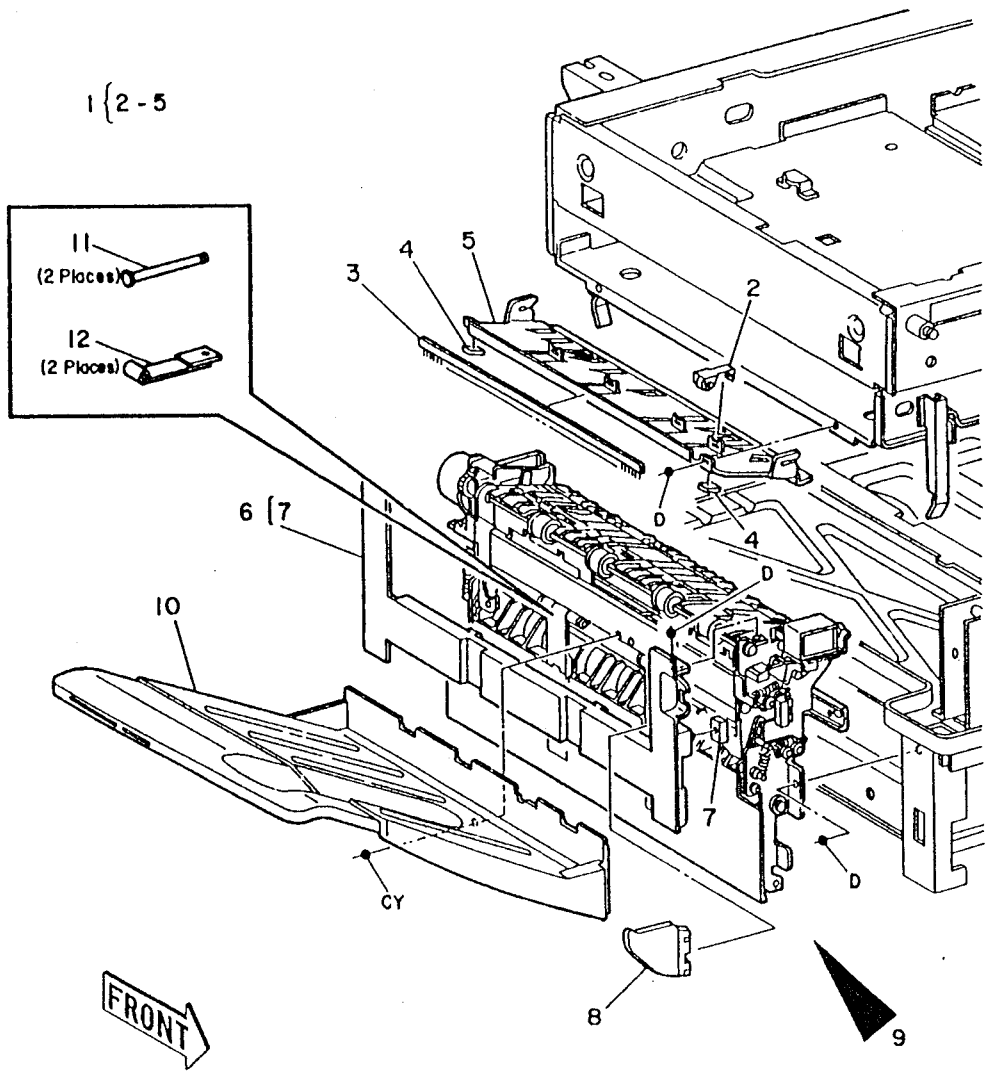

8-8-057-0

PL 7.9B Decurler Assembly (2 of 3)

Item	Part	Description
1	48E91391	OUTPUT GUIDE COVER
2	--	OUTPUT ROLL SHAFT (P/O ITEM 9 ON PL7.9A)
3	413W77559	BEARING
4	600K34800	EXIT DRIVE REPAIR KIT
5	9E32280	SPRING
6	7E81640	GEAR
7	9E36580	SPRING
8	--	COLLAR (P/O ITEM 9 ON PL7.9A)
9	13E93370	BEARING
10	3E80981	LATCH
11	11E91380	LINK ARM
12	9E29450	REAR SPRING
13	9E29460	FRONT SPRING
14	50E92021	OUTPUT GATE
15	92E81940	LABEL
16	92E18320	LABEL
17	13E93090	BEARING
18	--	CLUTCH ASSEMBLY (P/O ITEM 4)
19	7E86700	GEAR
20	--	EXIT JOINT (P/O ITEM 4)

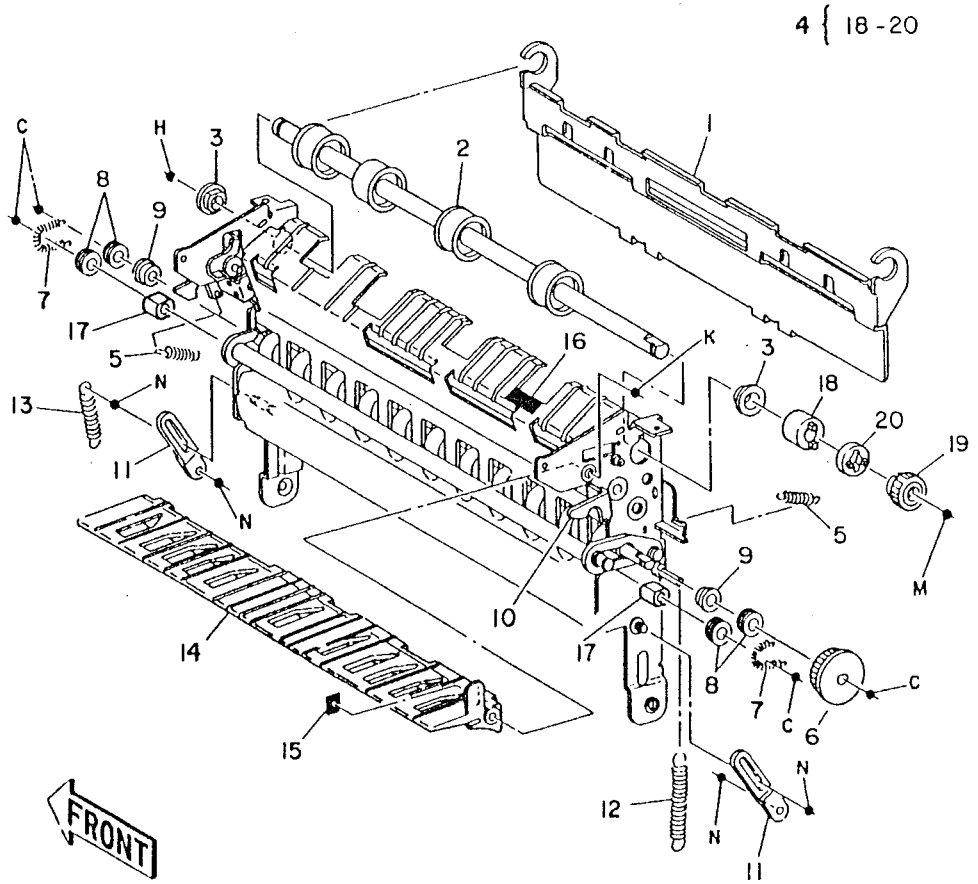

8-8-058-0

PL 7.9C Decurler Assembly (3 of 3)

Item	Part	Description
1	121K93530	DIVERTER SOLENOID (SOL10-035)
2	12K91040	DIVERTER GATE LINK ASSEMBLY
3	54K80701	GUIDE COVER ASSEMBLY
4	--	GUIDE COVER (P/O ITEM 3)
5	22K24200	PINCH ROLLER
6	9E84490	SPRING
7	127K94600	EXIT MOTOR (MOT10-001)
8	7E81690	GEAR
9	7E83210	GEAR
10	7E83220	GEAR
11	7E81670	GEAR
12	13E93370	BEARING
13	11K91010	GEAR LEVER
14	--	COLLAR
15	20E92940	PULLEY
16	23E92380	BELT
17	14E93330	SPACER
18	--	COLLAR (P/O ITEM 9 ON PL7.9A)
19	--	GEAR/PULLEY (P/O ITEM 9 ON PL7.9A)
20	13E93080	BEARING
21	9E36580	SPRING
22	--	COLLAR (P/O ITEM 9 ON PL7.9A)
23	--	ROLLER ASSEMBLY (P/O ITEM 9 ON PL7.9A
24	19E93161	PAD
25	20E18050	PULLEY
26	13E93090	SPACER
27	23E92390	BELT
28	--	COLLAR (P/O ITEM 9 ON PL7.9A)
29	9E84800	SPRING
30	110E91300	DECURLER INTERLOCK SWITCH (S01-315)
31	14E23070	SPACER
32	--	PLASTISLIP GREASE (SEE ITEM 9 ON PL16.1)

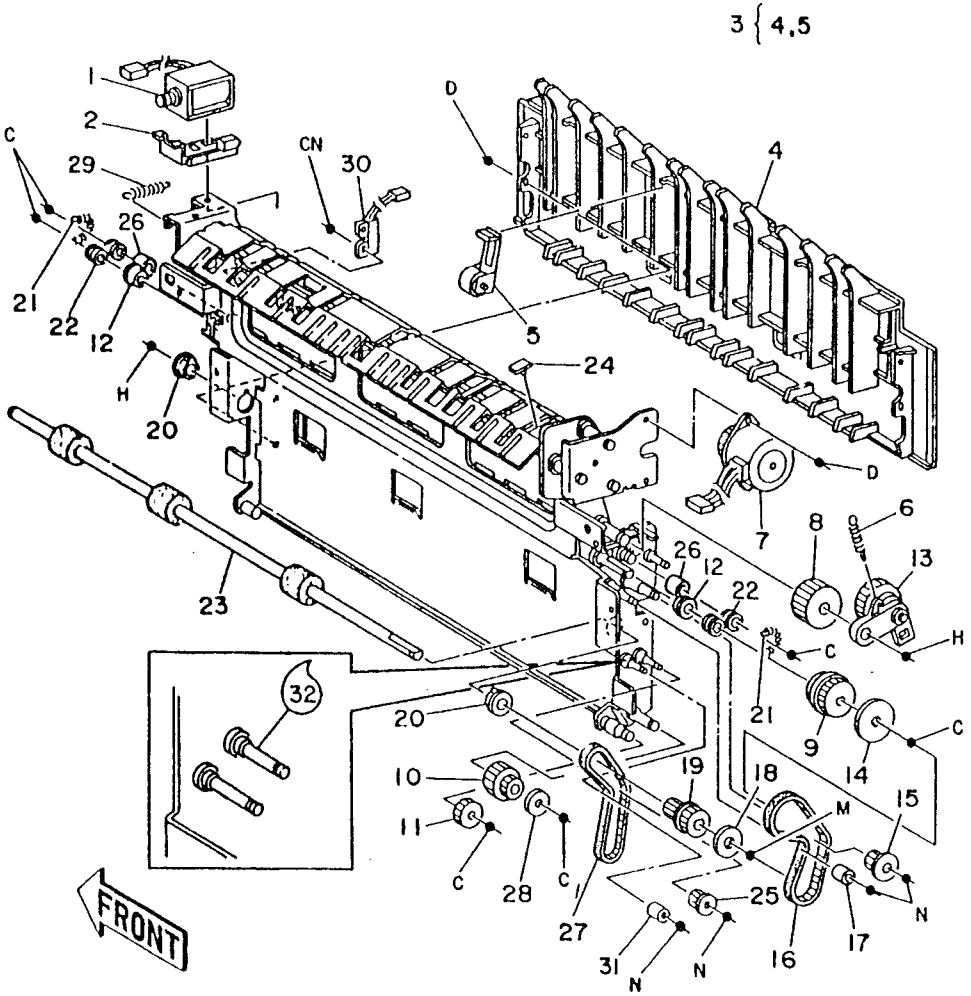

8-8-059-1

PL 8.1 HVPS, LVPS 1, Duplex Tray 4 PWB and SSR

Item	Part	Description
1	105K8234	HVPS (REP 9.1)
2	--	INSULATOR (NOT SPARED)
3	140K31220	EXIT MOTOR DRIVE PWB
4	9E82450	SPRING
5	105K8062	LVPS 1 (230V RX/XLA)
-	105K8072	LVPS 1 (115V USCO/XCL)
6	140K52521	DUPLEX AND TRAY 4 PWB
7	109E90230	SOLID STATE RELAY (115V USO/XCL)
-	109E1590	SOLID STATE RELAY (230V RX/XCL)
8	105K8202	BIAS PWB (ADJ 9.8)

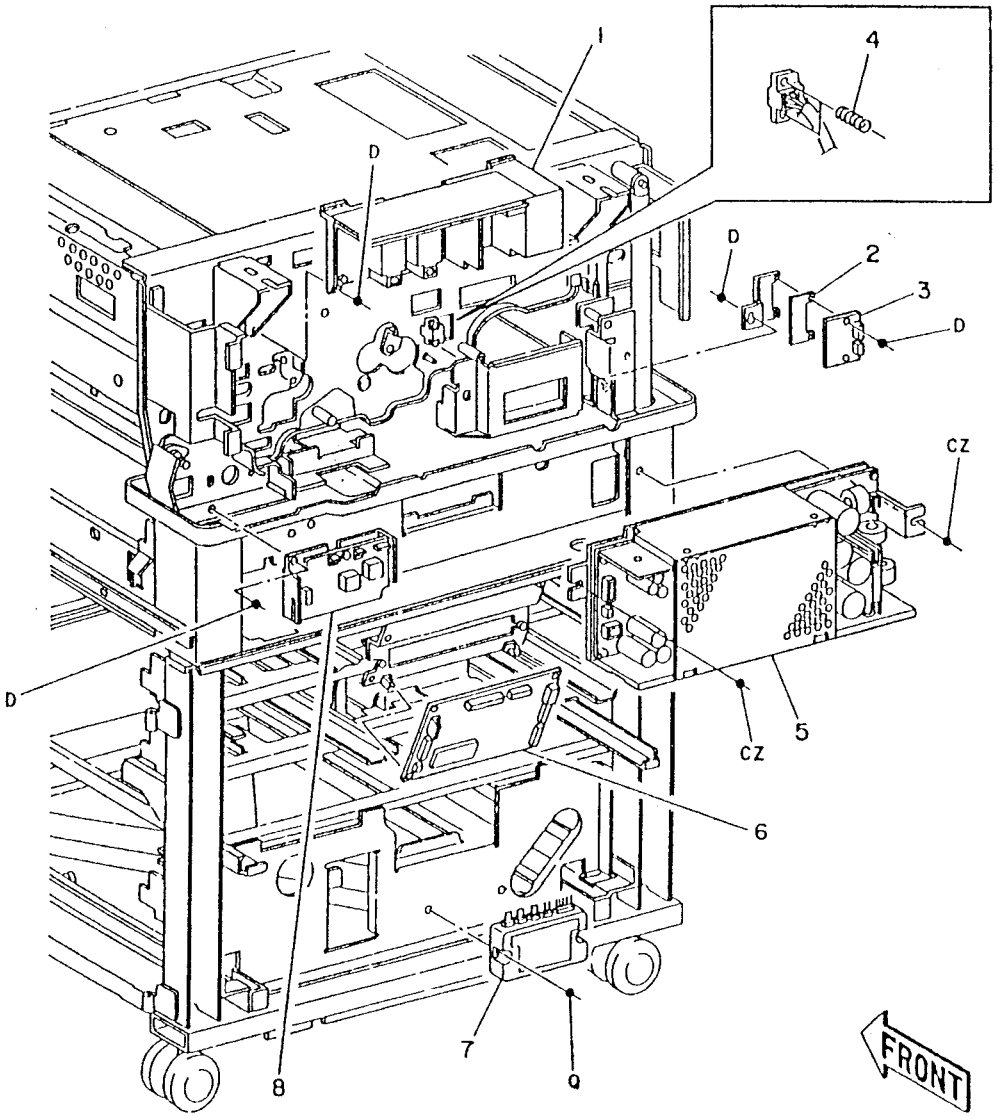

8-8-060-1

PL 8.2 PWB's for LLM, IOT, Optics, Relay, and AC Drive

Item	Part	Description
1	140K61400	IOT PWB (WITH TAG 3) (ADJ 3.1) (CQ 1.3)
2	140K51122	LLM PWB (WITH TAG 6) (CQ 1.3)
3	140K45751	OPTICS CONTROL PWB
4	108E90880	FUSE (125V 5A)
5	140K49376	AC PWB (RX) (REP 1.1) (WITH TAG 7)
-	140K49366	AC PWB (USCO/XCL) (REP 1.1) (WITH TAG 7)
-	140K48836	AC PWB (125V XLA) (REP 1.1) (WITH TAG 7)
6	142E1210	RFI FILTER (230V RX/XLA)
-	142E1390	RFI FILTER (115/125V USCO/XCL/AOS)
7	152S5104	POWER CORD (EUROPE)
-	152S5105	POWER CORD (UK)
-	152S5106	POWER CORD (DENMARK)
-	152S5107	POWER CORD (SWISS)
-	117K14380	POWER CORD - (115/125V USCO/XCL/AOS)
8	108E2282	GFP UNIT (WITH TAG 5)
9	114K511	AC SUPPLY INPUT ASSEMBLY
10	109E1470	THERMAL OVERCURRENT BREAKER (60HZ)
-	109E1232	THERMAL OVERCURRENT BREAKER (50HZ)
11	140K49463	POWER DISTRIBUTION PWB (WITH TAG 2)
-	--	FUSE (F1) (230V 2A)
12	105K8123	LVPS 2 (230V RX/XLA) (SEE NOTE 1)
-	105K8133	LVPS 2 (115V USCO/XCL) (SEE NOTE 1)
13	108E920	FUSE (F2-F8,F10,F11) (125V 3A)
14	108E2160	FUSE (F1,F9) (125V 4A) (SLOW-BLOW)

NOTE 1: Only installed on DADF configuration m/c's

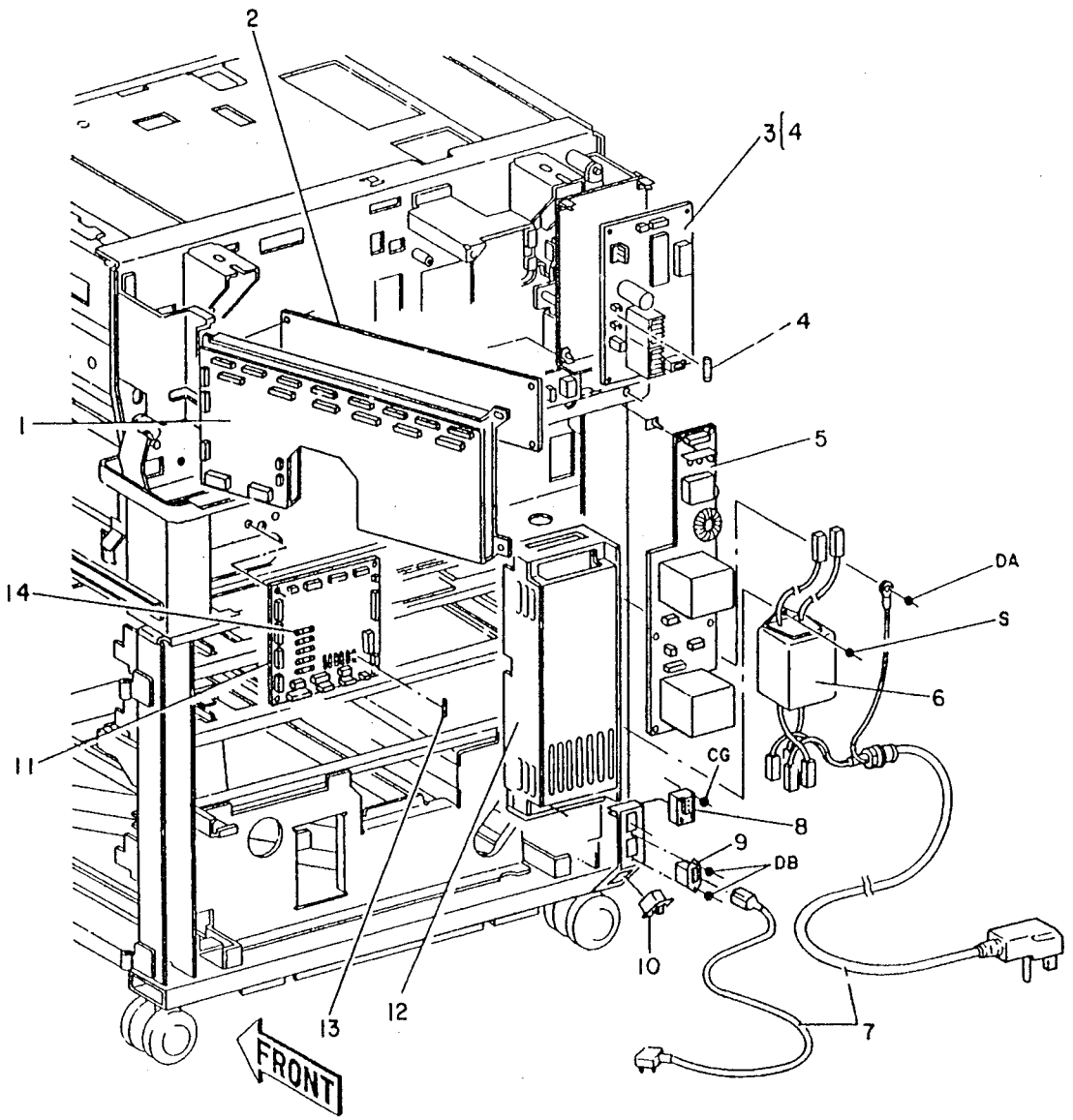

8-8-06I-1

PL 8.3 ADC PWB, ISIL Control PWB and Backlight PS PWB

Item	Part	Description
1	140K45770	ADC PWB
2	140K45832	ISIL CONTROL PWB
3	110K91380	FRONT INTERLOCK SWITCH (S01-300)
4	110K91960	ON/OFF SWITCH (S01-400) (60HZ)
-	110E5560	ON/OFF SWITCH (S01-400) (50HZ)
5	2E39782	SAFETY INNER COVER
6	--	SAFETY SWITCH COVER
7	105K7780	BACKLIGHT POWER SUPPLY PWB (WITHOUT TAG 8)
-	105K9100	BACKLIGHT POWER (WITH TAG 8)
8	--	GROUND WIRE ASSEMBLY

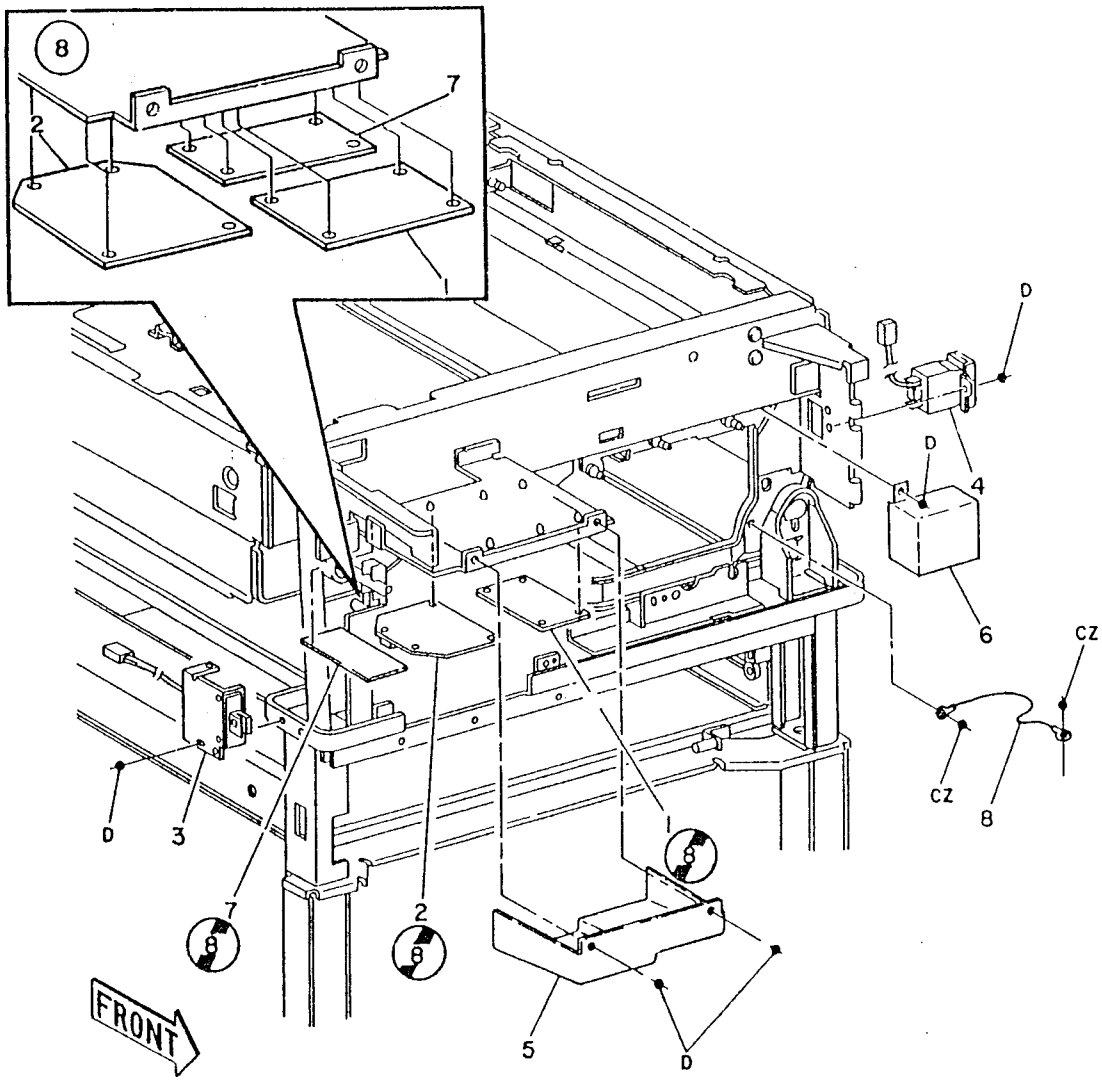

8-8-062-I

PL 8.4 EPROMS

Item	Part	Description
1	537E30343	IOT EPROM (U10)
2	133E7701	IOT NVM (U9) (ADJ 3.1) 537K43260
3	538E2281	HCF CONTROL ROM (U1)
4	538E2290	DUPLEX/TRAY 4 ROM (U1)
5	537E34771	LLM NVM CHIP (U3) (ADJ 3.1)
6	537E37322	LLM EPROM (U5)
7	538E30131	SORTER CONTROL EPROM (U1/U2)
8	538E2261	DADF CONTROL OTP (U2)
9	538E2274	SORTER/STAPLER CONTROL OTP (U1)
10	537E30350	OPTICS CONTROL EPROM (U2)
11	41S2300	USER INTERFACE CONTROL LANGUAGE EPROM (U16/U17) (ENGLISH)
-	41S2301	EPROM (FRENCH)
-	41S2302	EPROM (DUTCH)
-	41S2303	EPROM (SWEDISH)
-	41S2304	EPROM (FINNISH)
-	41S2305	EPROM (DANISH)
-	41S2306	EPROM (NORWEGIAN))
-	41S2307	EPROM (GERMAN)
-	41S2308	EPROM (ITALIAN)
-	41S2309	EPROM (SPANISH/LATIN)
-	41S2310	EPROM (PORTUGUESE)
-	41S2311	EPROM (GREEK)
-	41S2312	EPROM (BELGIUM)
-	41S2313	EPROM (SWISS)
-	537E38570	EPROM (LANGUAGE/ENGLISH) (XCL)
-	537E38580	EPROM (FRENCH/LANGUAGE) (XCL)
12	537E36302	USER INTERFACE CONTROL EPROM (U15)
13	537E30360	EPROM (U4)

NOTE: The installation of any chip will require completing Adjustment 3.1

NOTE: The position of the pin 1 on both NVM chips is identifed by a small circular depression on the top of the chips.

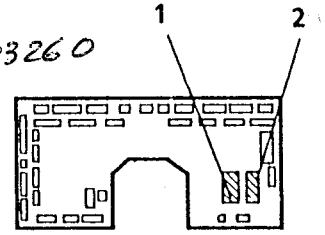

IOT PWB

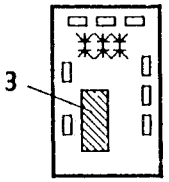

HCF PWB

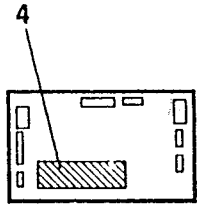

DUPLEX AND TRAY 4 PWB

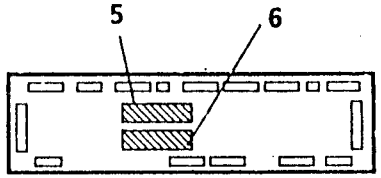

LLM PWB

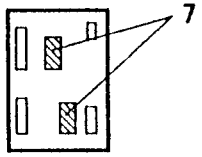

SORTER CONTROL PWB

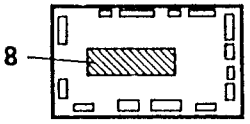

DADF CONTROL PWB

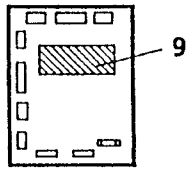

SORTER / STAPLER CONTROL PWB

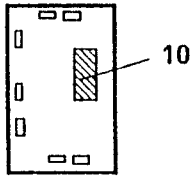

OPTICS CONTROL PWB

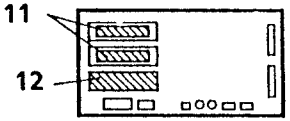

USER INTERFACE CONTROL PWB

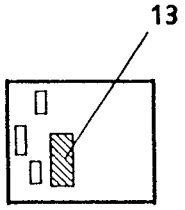

ISIL CONTROL PWB

8-8-112-1

PL 9.1 Latch and Gas Spring

Item	Part	Description
1	600K35110	GAS SPRING KIT (PLATEN - REAR)
2	3E81350	STOPPER (PLATEN)
3	600K35100	GAS SPRING KIT (DADF - FRONT)
-	600K35090	GAS SPRING KIT (PLATEN - FRONT / DADF - REAR)
4	3E80572	LATCH HANDLE
5	3E80580	LATCH
6	3E24900	STOPPER
7	9E84720	LATCH SPRING
8	6E81661	LATCH SHAFT
9	3K7040	LATCH HANDLE ASSEMBLY
10	3K6770	LOCK ASSEMBLY (60HZ)
-	3K6731	LOCK ASSEMBLY (50HZ)
11	3P1007	MASTER KEY (60HZ)
-	3S90108	MASTER KEY (50HZ)

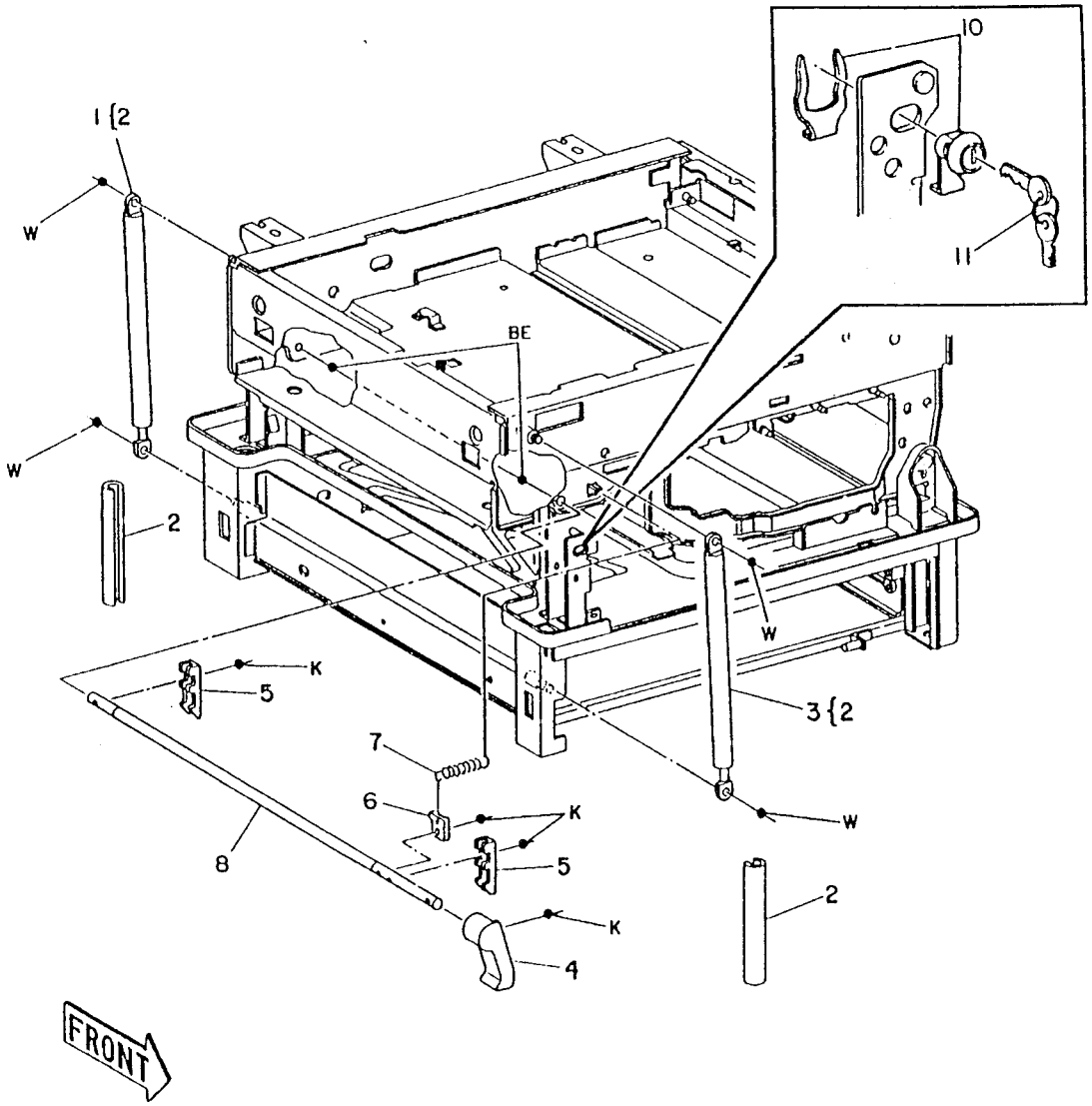

8-8-063-0

PL 9.2 Document Cover, Top Cover and Control Panel

Item	Part	Description
1	48K81491	DOCUMENT COVER (SEE NOTE 1)
2	4E94050	REFLECTOR PAD ASSEMBLY
3	2E74880	DADF HINGE COVER
4	48E90370	DOCUMENT POCKET COVER
5	92E94150	BLANK LABEL
6	2E54652	TOP COVER (REP 6.2)
7	140K48843	OPTIONS KEYBOARD PWB
8	53E90581	RH OPTICS FILTER
9	110E5081	PLATEN INTERLOCK SWITCH (S05-341)
10	152K59381	UI/TOUCH SCREEN HARNESS (WITH TAG 8)
11	56K1480	CONTROL PANEL ASSEMBLY (WITH TAG 8)
11A	21K1354	KEYCAP ASSEMBLY (NOT SHOWN ON ILLUSTRATION)
12	140K59271	USER INTERFACE PWB (WITH TAG 4) (ADJ 3.1)
13	152K52421	CONTROL PANEL HARNESS
14	140K48851	NUMERIC KEYBOARD PWB
15	123K2381	TOUCH SCREEN PWB (WITHOUT TAG 8)
-	123K2640	TOUCH SCREEN PWB (WITH TAG 8)
16	48E90360	COVER HOLDER
17	3E81000	HINGE

NOTE 1: For Document Cover installation kit see PL 15.1

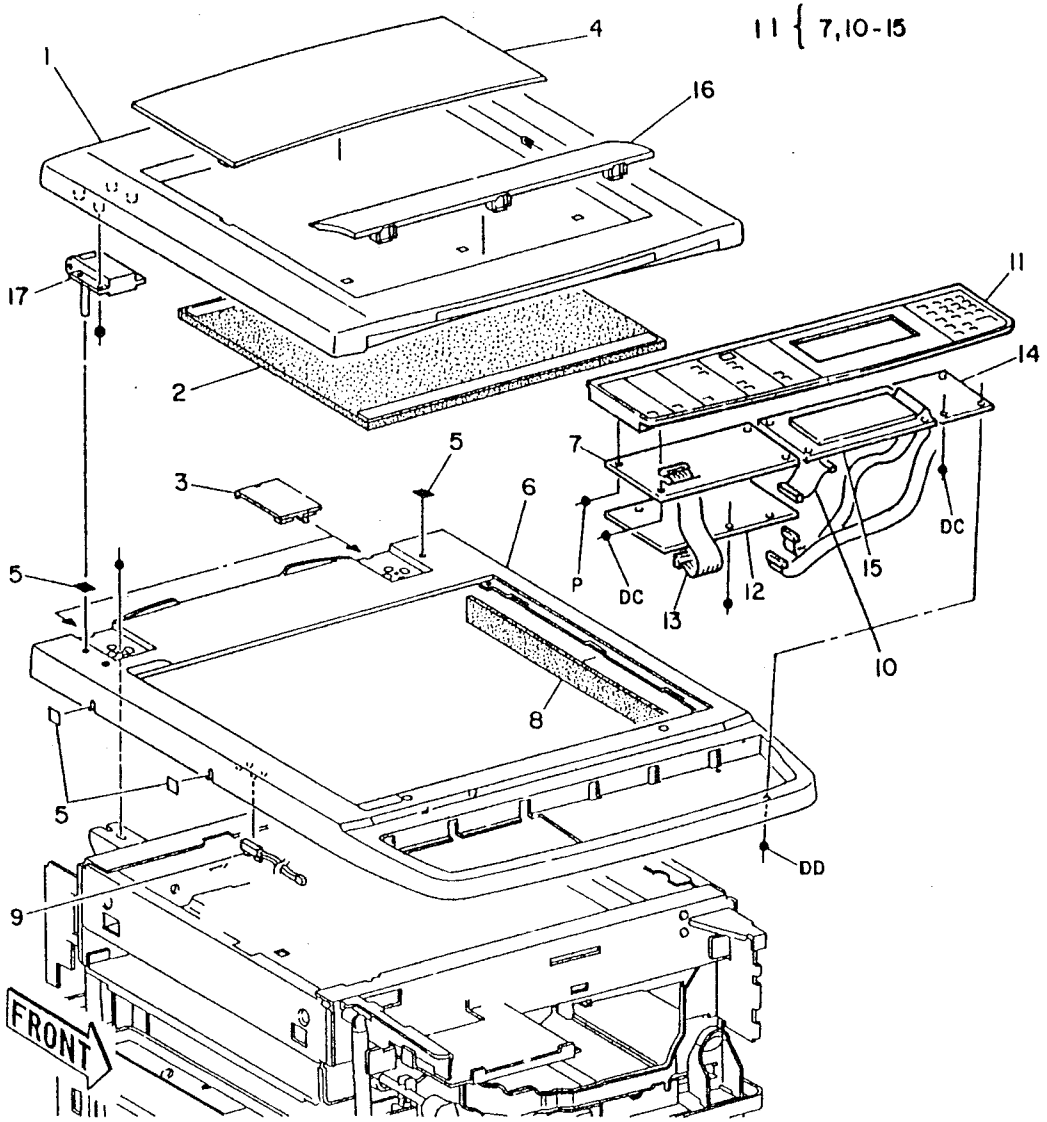

PL 9.3 Front/LH Covers and Castors

Item	Part	Description
1	2K58091	LH UPPER COVER
2	53E90710	LH OPTICS FILTER
3	2E74921	FRONT LOWER COVER (NON-HCF)
4	48E91010	INTERLOCK COVER
5	--	PWB COVER
6	2E58840	SWITCH COVER
7	12E5723	FRONT COVER LINK
8	3E80861	HINGE
9	48E90750	LH REAR BLANK COVER
10	48E90740	LH FRONT BLANK COVER
11	2E46971	LH REAR LOWER COVER
12	2E42661	LH FRONT LOWER COVER
13	2K44487	FRONT COVER
14	92E80870	LABEL
15	92E80880	LABEL
16	--	FRONT LOWER COVER (HCF ONLY)
17	17E90620	REAR FREE CASTOR
18	17E90630	FRONT LOCKING CASTOR
19	98K16250	WORK ORGANISER KIT (OPTION ONLY) (SEE NOTE 1)

NOTE 1: The Work Organiser kit is applicable to all 5340/5350 m/c's, except those fitted with a sorter/auto stapler or a manual stapler.

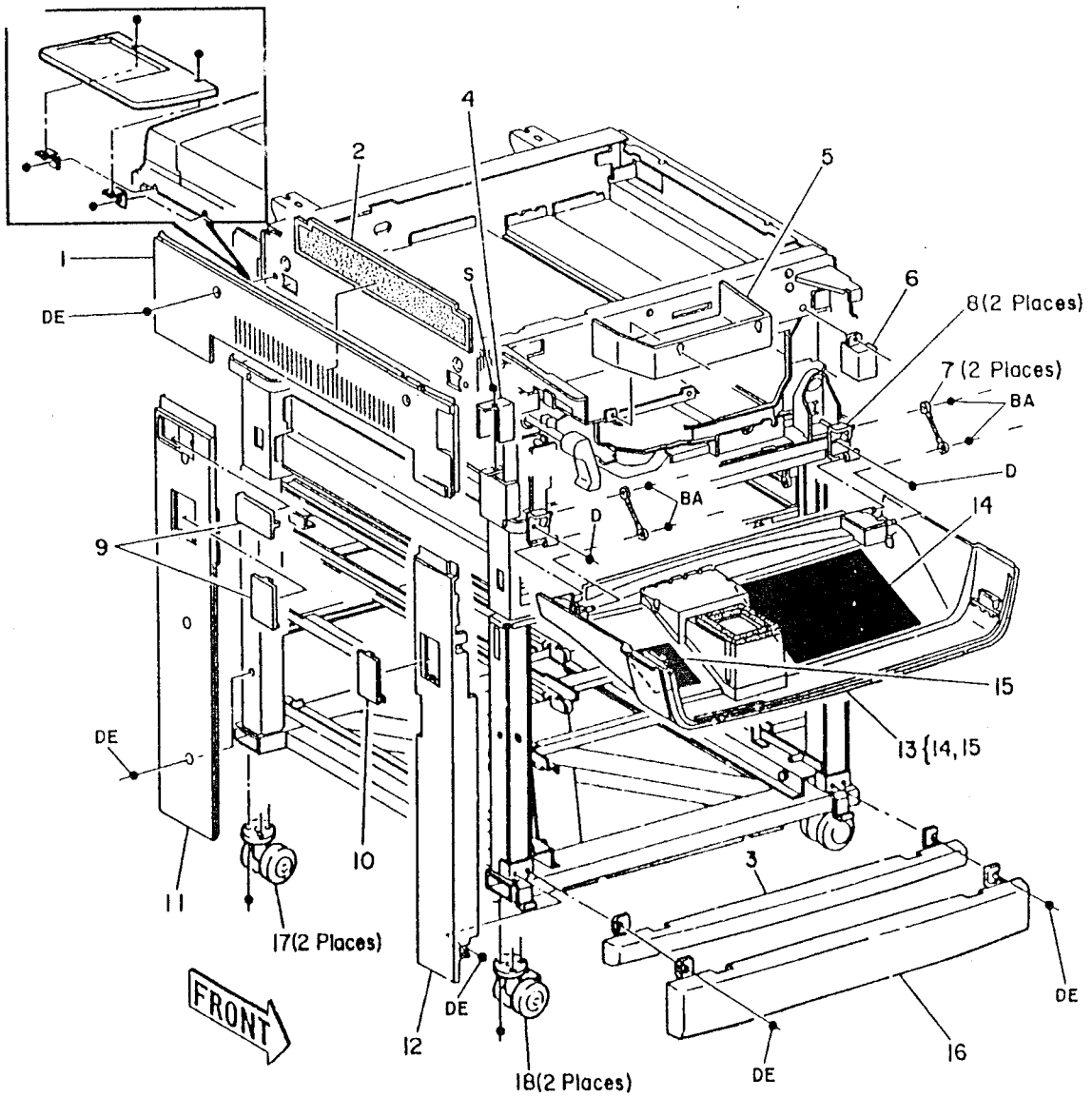

8-8-065-I

PL 9.4 Rear/RH Covers

Item	Part	Description
1	48E90682	RH UPPER COVER (WITH OUT HCF)
1A	2E39243	RH UPPER COVER (HCF ONLY)
2	92E94160	LABEL
3	48K113	REAR LOWER COVER (WITH TAG 14)
4	2E40092	RH FRONT LOWER COVER
4A	2E40104	RH FRONT LOWER COVER (HCF ONLY)
5	2E40113	RH REAR LOWER COVER
5A	2E40124	RH REAR LOWER COVER (HCF ONLY)
6	48K104	REAR UPPER COVER
7	2E46605	DOCUMENT HOLDER
8	2E46613	DOCUMENT DOOR
9	2K61632	DOCUMENT HOLDER ASSEMBLY
10	117K17290	EARTH WIRE (WITH TAG 14)

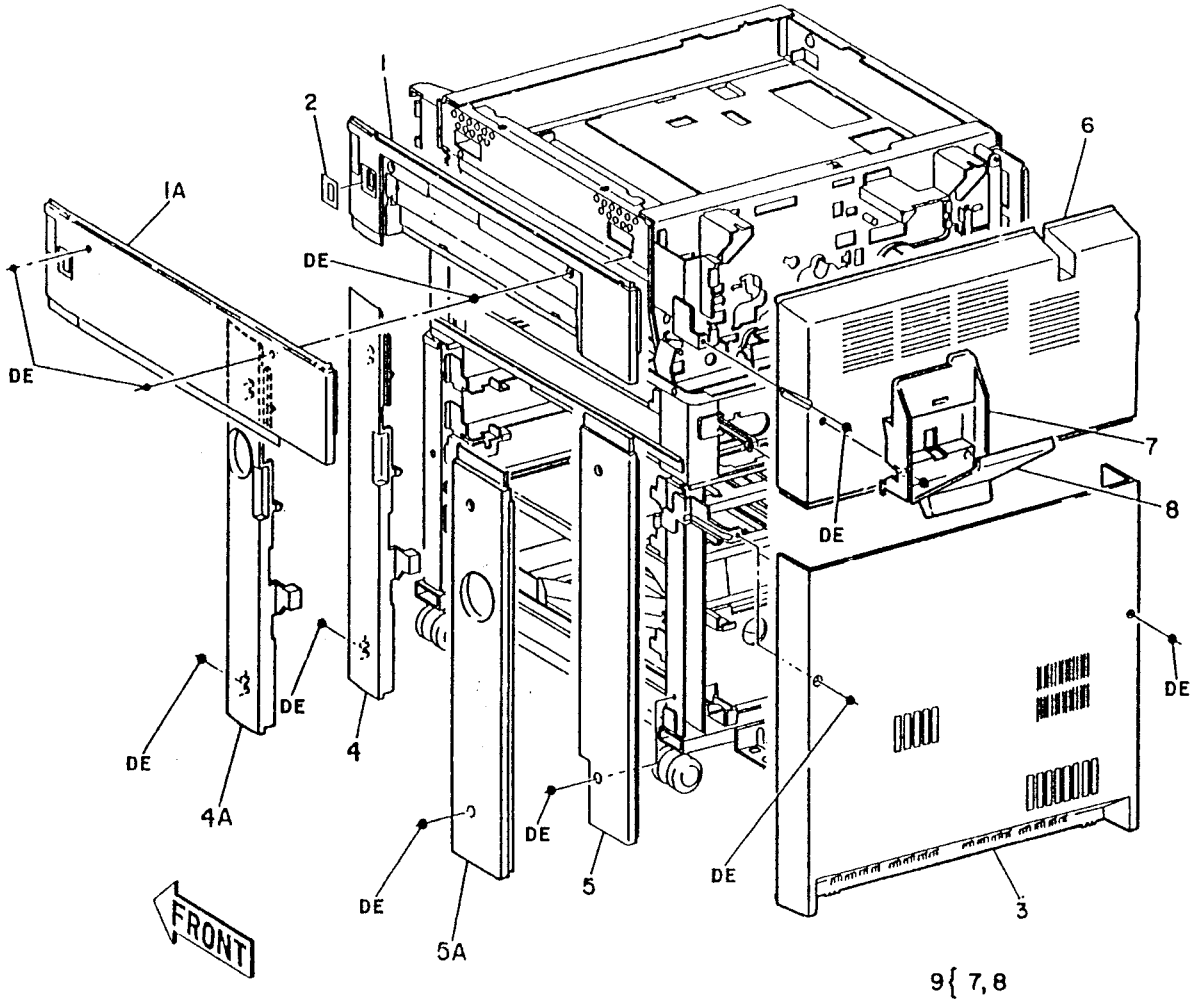

8-8-066-0

PL 10.1 Front Fuser Fan and Optics Fan

Item	Part	Description
1	127K94270	FRONT FUSER FAN (MOT10-007)
2	54K80912	DUCT ASSEMBLY
3	54K80930	DUCT
4	--	DUCT (NOT SPARED)
5	127K94200	OPTICS FAN (MOT06-010)

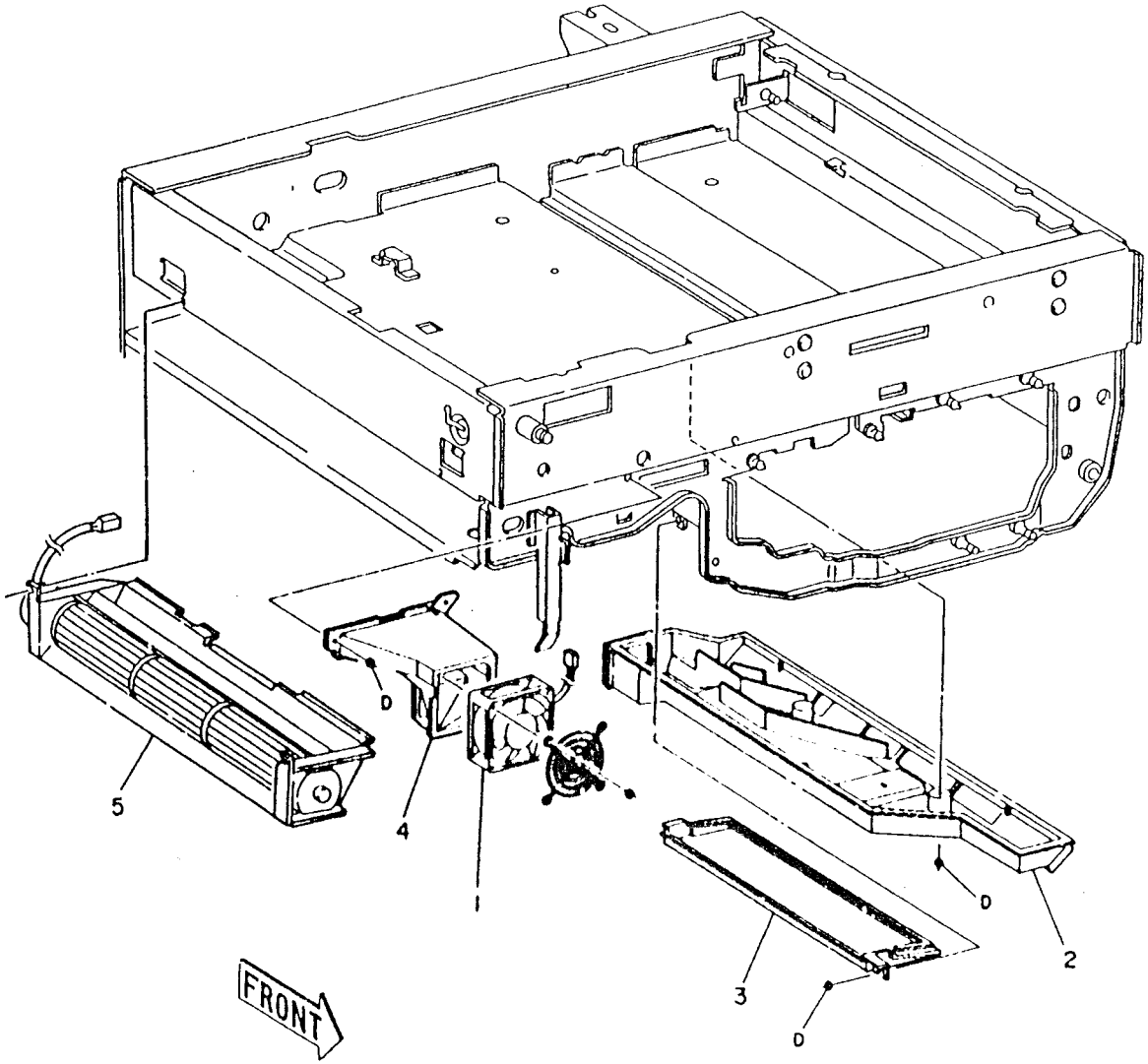

8-8-067-0

PL 10.2 Fuser Cooling Motor and LVPS Cooling Motor

Item	Part	Description
1	127K94251	REAR COOLING FAN ASSEMBLY
2	--	BRACKET (P/O ITEM 1)
3	--	DUCT (P/O ITEM 1)
4	127K94562	REAR FUSER FAN (MOT10-005)
5	--	DUCT (P/O ITEM 1)
6	127K94270	LVPS COOLING FAN MOTOR
7	54K2350	DUCT
8	--	SEAL
9	54K2380	VACUUM TRANSPORT DUCT
10	--	DUCT
11	--	BRACKET (NOT SPARED)

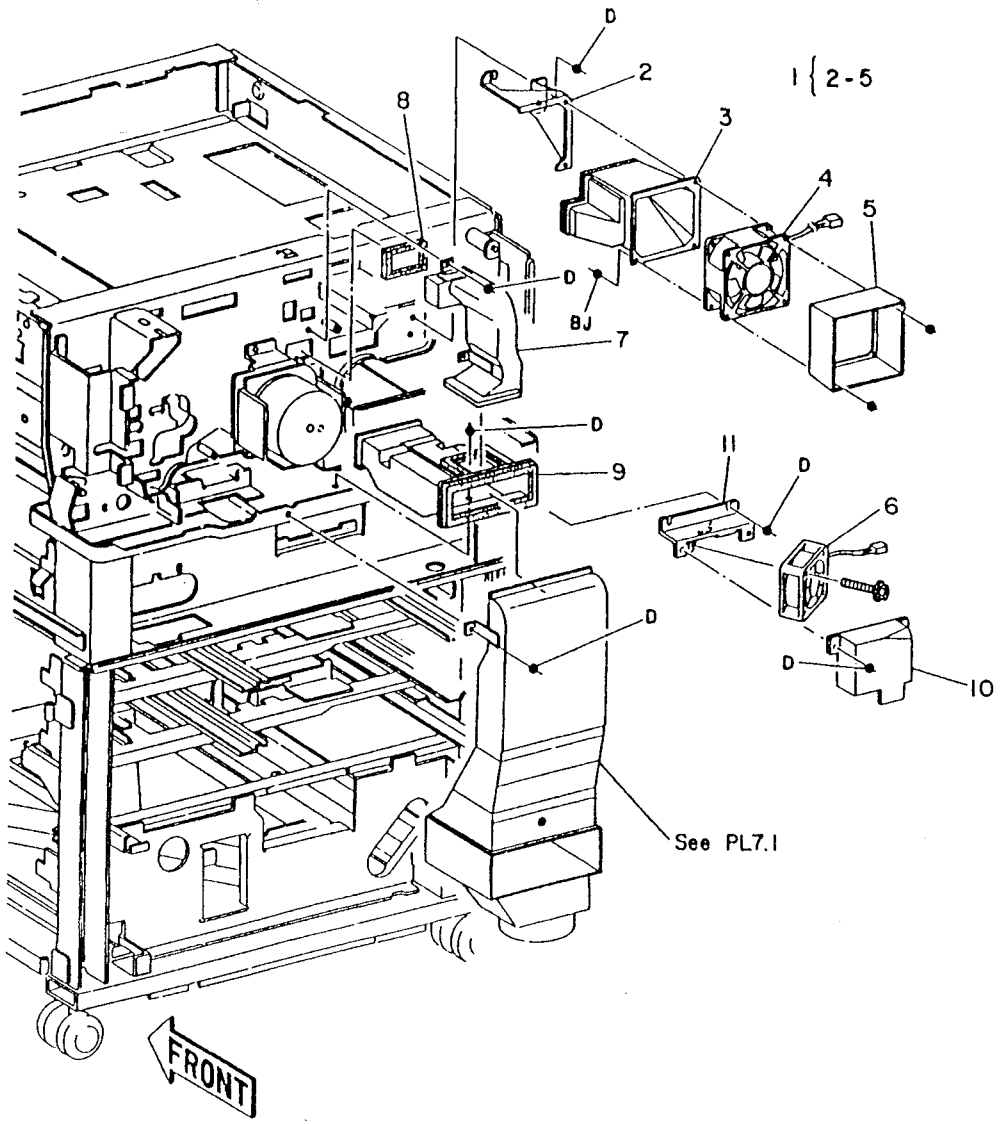

8-8-068-0

PL 11.1 Edit Pad (With Tag 242)

Item	Part	Description
1	2K46241	EDIT PAD KIT
2	--	LABEL (EDIT PAD) (P/O ITEM 1)
3	71K90060	PEN AND HOLDER
4	152K71010	EDIT PAD HARNESS ASSEMBLY
5	--	EDIT PAD PWB (P/O ITEM 1)
6	118E90160	STRAIN RELIEF BUSH
7	121E91530	FERRITE CORE

NOTE 1: For Edit Pad installation kit see PL 15.1

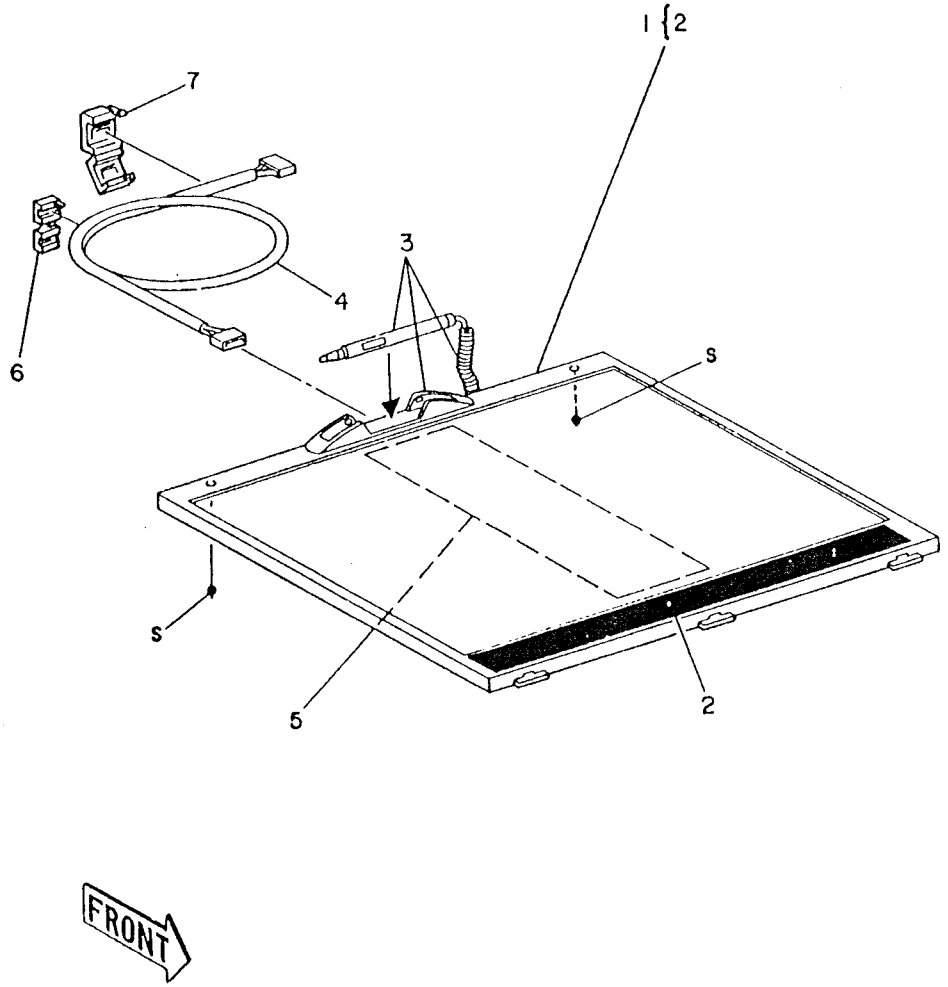

8-8-069-1

PL 11.2 GRAIB, Foreign Interface, Coin-Op and Mechanical Auditron/ Autometer

Item	Part	Description
1	101E8552	POD BOX
2	2E56071	BLANK PANEL
-	--	CONNECTOR PANEL (AUDITRON/AUTOMETER) (NOT SPARED)
3	152K58253	FORIEGN INTERFACE HARNESS ASSEMBLY (WITH TAG 235)
4	2E56122	COIN-OP CONNECTOR PANEL
5	101E8561	COVER BOX LID
6	140K62790	GRAIB PWB
7	--	MECHANICAL AUDITRON PWB TO GRIAB HARNESS ASSEMBLY
8	140K61860	MECHANICAL AUDITRON PWB (WITH TAG 236)
9	152K57510	POD TO GRIAB HARNESS ASSEMBLY
10	--	JUMPER HARNESS ASSEMBLY
11	152K57830	A/C MECHANICAL AUDITRON HARNESS ASSEMBLY
12	--	A/C M/C TO POD HARNESS ASSEMBLY
13	152K57050	M/C TO POD HARNESS ASSEMBLY
14	113E7202	MAINS CONNECTOR (50HZ)
15	117K15820	MAIN CORD (50HZ)
16	537K21513	EPROM U18
17	600K39560	SRAM U17/SMARTWATCH U19 KIT
18	101K9990	AUDITRON ASSEMBLY (USCO/XCL/XLA)
-	101K10000	AUTOMETER ASSEMBLY (RX/XLA) (WITH TAG 237)
19	111P416	COUNTER MODULE (USCO/XCL/XLA)
-	111S90188	COUNTER MODULE (RX/XLA)

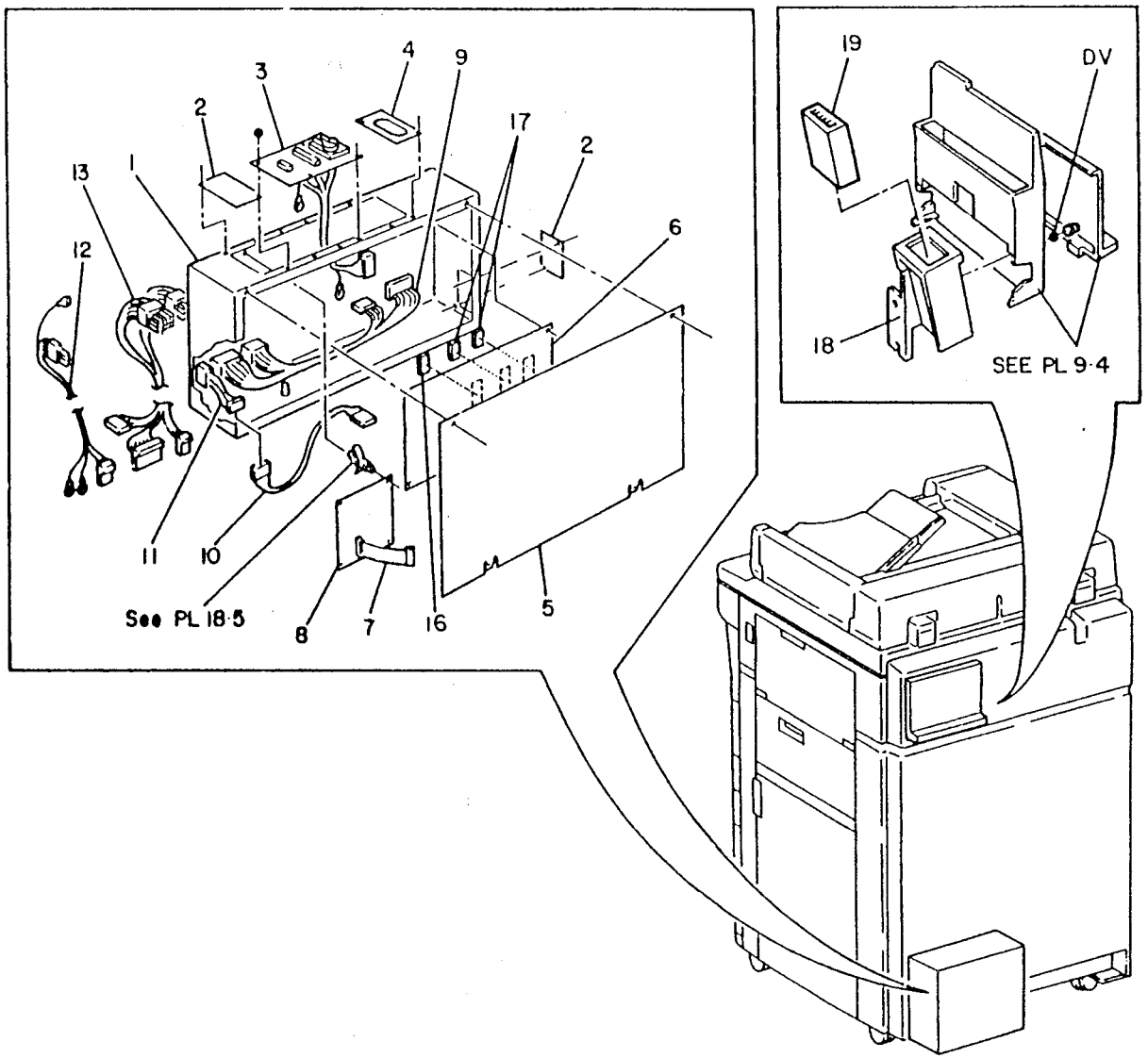

8-8-108-1

PL 11.3 Extreme/Cold Environment Kits

Item	Part	Description
1	606K3251	DRUM HEATER KIT (USCO/XCL/XLA) (60HZ) (WITH TAG 204)
-	606K3420	DRUM HEATER KIT (RX/XLA) (50HZ) (WITH TAG 205)
2	606K3260	OPTICS HEATER KIT FULL RATE/UPPER HALF RATE MIRRORS (WITH TAG 206)
3	606K3700	OPTICS HEATER KIT UPPER HALF RATE/LOWER HALF RATE MIRRORS (SEE NOTE 1) (WITH TAG 211)
4	606K3181	RELAY KIT (60HZ) (WITH TAG 200)
-	606K3411	RELAY KIT (50HZ) (WITH TAG 201)
5	606K3192	PAPER TRAY HEATER KIT (WITH TAG 202)

NOTE 1: This Kit (Item 3) can only be installed in conjunction with Item 2.

PL 11.4 High Humidity Kit

Item	Part	Description
1	606K3360	HIGH HUMIDITY KIT (WITH TAG 207)
2	--	SHIELD (P/O ITEM 1)
3	--	FRAME SHIELD (P/O ITEM 1)
4	--	COVER (P/O ITEM 1)
5	--	RH SHIELD (P/O ITEM 1)
6	--	LH SHIELD (P/O ITEM 1)
7	--	LOWER SHIELD (P/O ITEM 1)
8	--	LOWER SEAL (P/O ITEM 1)
9	--	BOTTOM PLATE SHIELD (P/O ITEM 1)

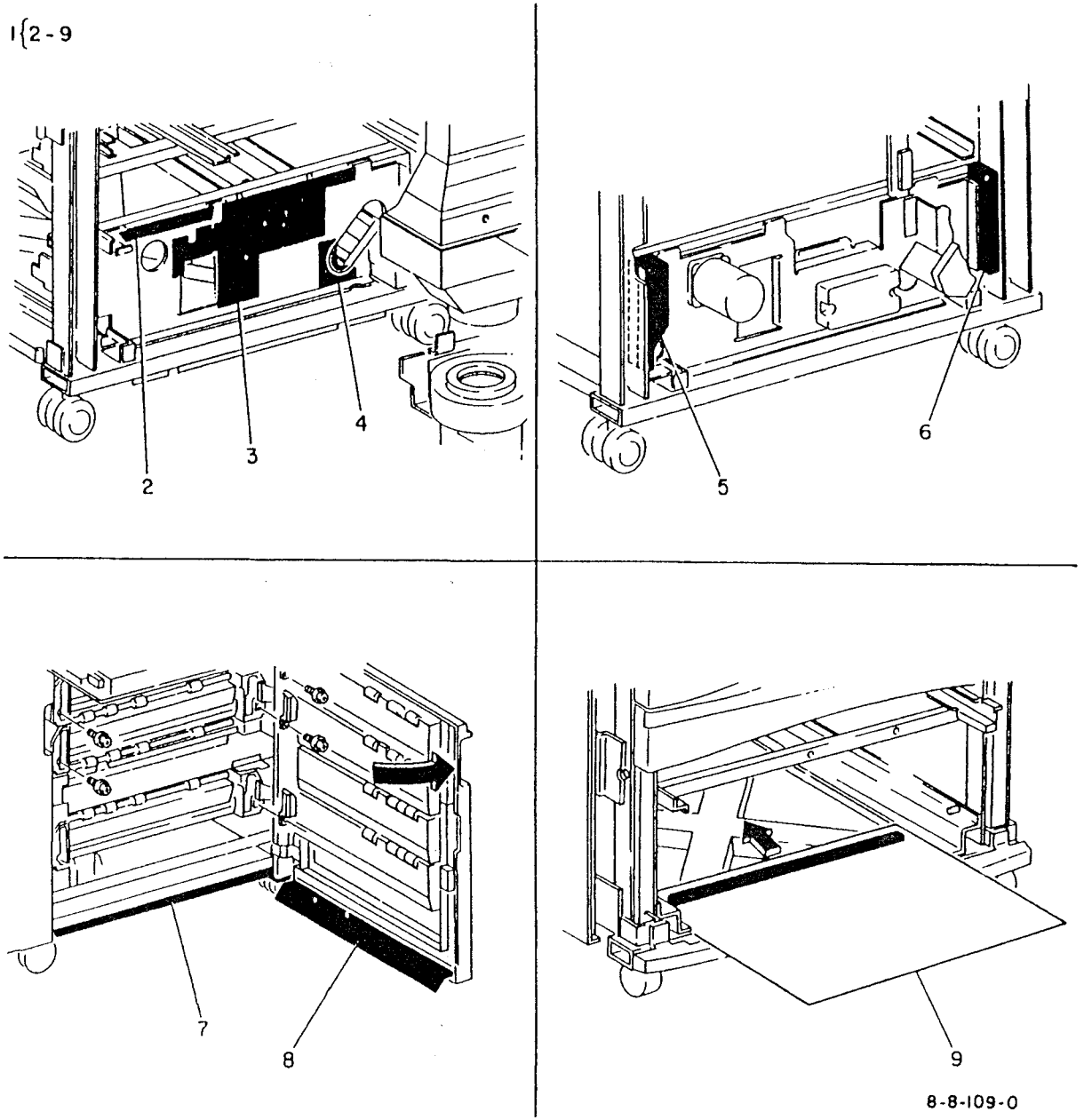

8-8-109-0

PL 11.5 Modified Illuminator Kit

Item	Part	Description
1	606K3380	MODIFIED ILLUMINATOR KIT (FOR BOOK COPYING APPLICATIONS ONLY) (WITH TAG 208)

888881

PL 12.1 DADF Covers

Item	Part	Description
1	3K91881	THUMBSCREW
2	140K71351	INDICATOR PWB
3	92E81441	INDICATOR LABEL
4	48E91071	REAR COVER
5	54E93961	INPUT COVER
6	105K91880	STATIC ELIMINATOR
7	54K81211	OUTPUT COVER
8	--	UPPER OUTPUT BAFFLE (NOT SPARED)
9	--	EARTH HARNESS
10	59K91230	NIP ROLLER
11	48K80410	FRONT COVER ASSEMBLY
12	19E93510	PUSH RIVET
13	54K81162	INPUT COVER ASSEMBLY
14	49E92101	MAGNET PLATE
15	9E26990	SPRING
16	59K91190	NIP ROLLER

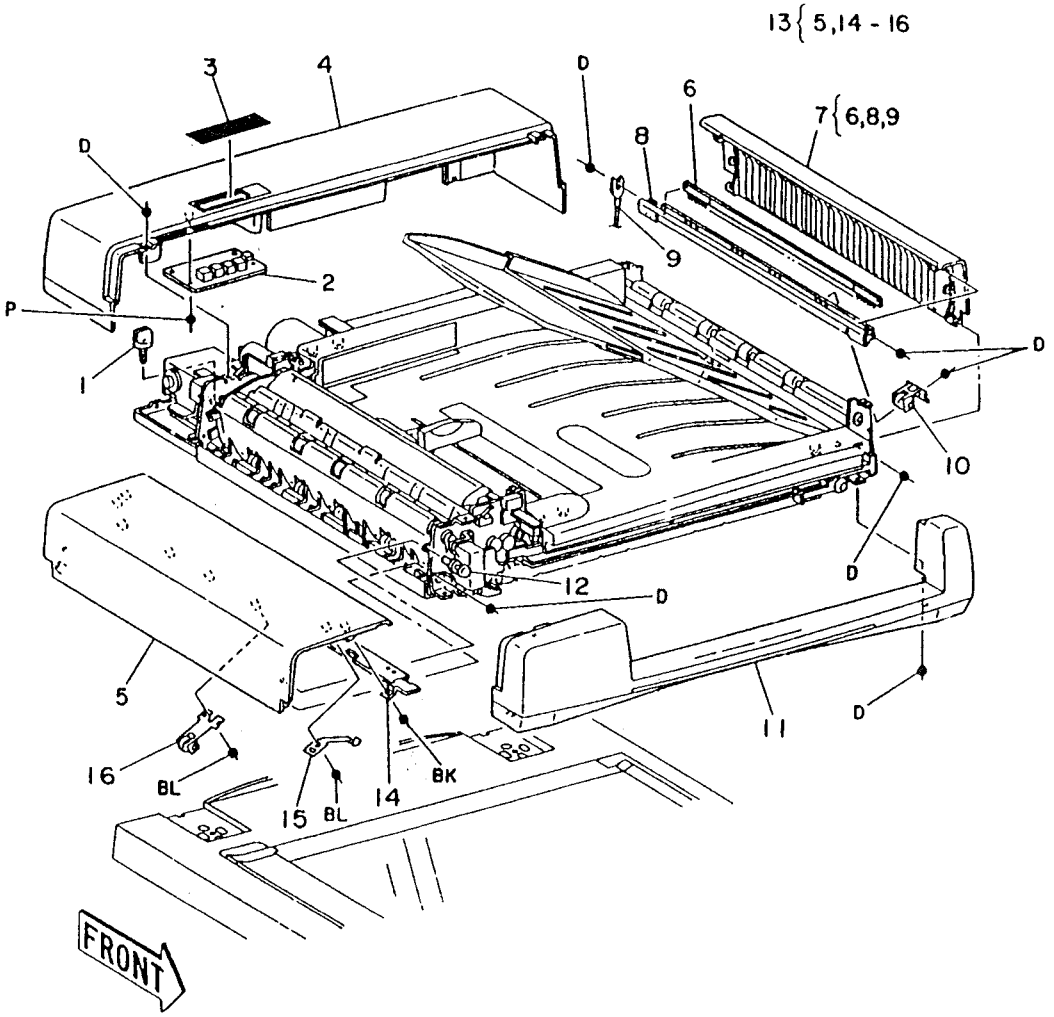

8-8-070-0

PL 12.2 DADF Input Drive Motor and Document Drive Motor

Item	Part	Description
1	36K90850	RH COUNTERBALANCE (EDIT PAD) (REP 5.2) (ADJ 5.6, 5.10) (WITH TAG 242)
-	36K90830	RH COUNTERBALANCE (REP 5.2) (ADJ 5.6, 5.10)
2	36K90820	LH COUNTERBALANCE (REP 5.2) (ADJ 5.6, 5.10)
-	36K90840	LH COUNTERBALANCE (EDIT PAD) (REP 5.2) (ADJ 5.6, 5.10) (WITH TAG 242)
3	--	STATIC ELIMINATOR
4	23E92330	INPUT DRIVE BELT (REP 5.4)
5	23E92341	DADF DRIVE BELT (REP 5.3) (ADJ 5.8)
6	127K94540	INPUT DRIVE MOTOR (MOT05-005) (REP 5.4)
7	127K94520	DOCUMENT DRIVE MOTOR (MOT05-305) (REP 5.3)
8	--	EARTH HARNESS (NOT SPARED)
9	--	FUSE (250V 1.25A)
10	152K71111	DADF HARNESS
11	140K71503	DADF CONTROL PWB
12	--	MOUNT BRACKET (NOT SPARED)
13	20E93250	INPUT DRIVE PULLEY
14	108P68363	FUSE (125V 4A) (F1, F2)
15	--	HARNESS ASSEMBLY

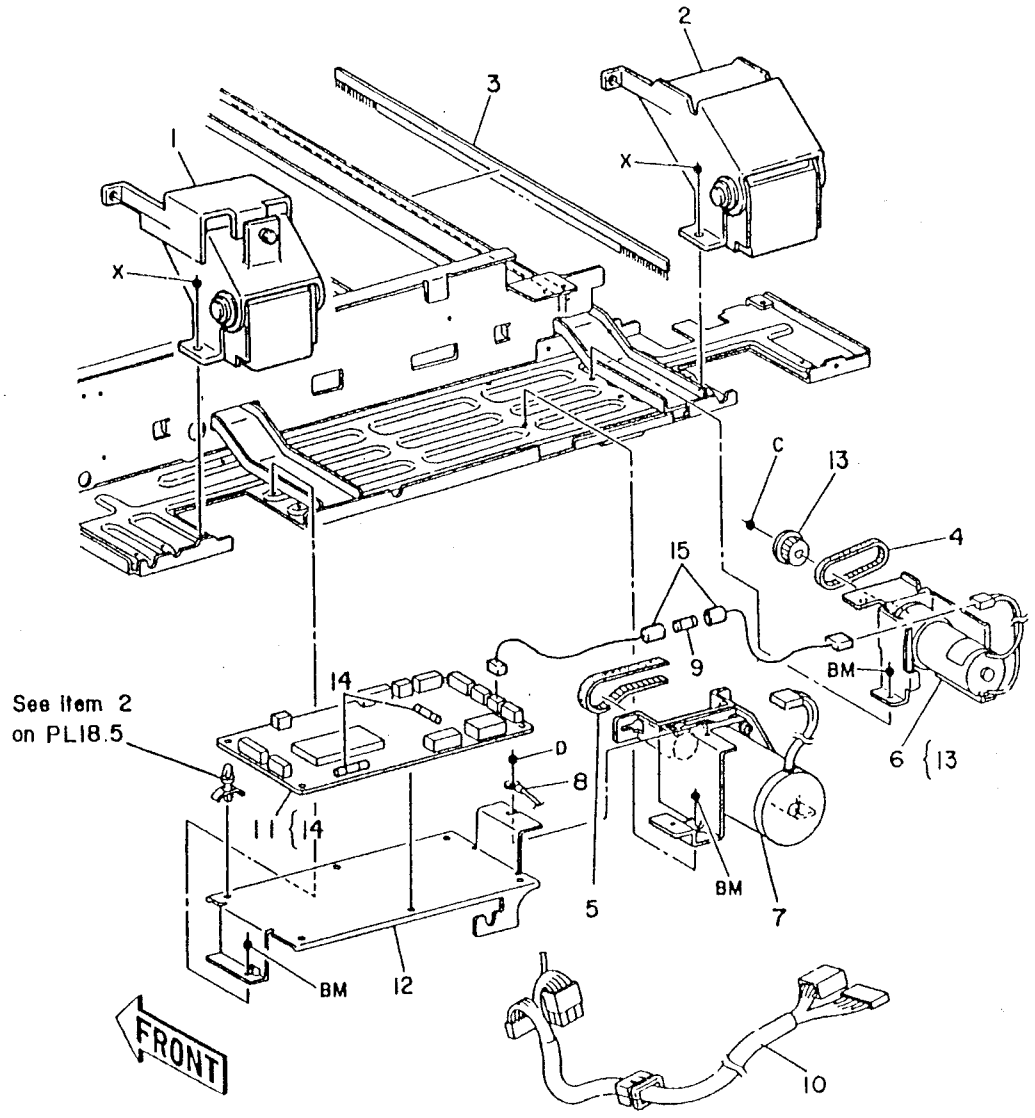

8-8-071-0

PL 12.3A Document Input Transportation (1 of 2)

Item	Part	Description
1	54K81331	LOWER GUIDE ASSEMBLY
2	19K91060	PAD
3	13E93370	BEARING
4	600K90370	FEED ROLL KIT (2 ROLLS) (REP 5.5)
5	59K91391	NUDGER ROLL (REP 5.7)
6	9E91960	SPRING
7	121K93970	ENTRANCE GATE SOLENOID (SOL05-025) ((REP 5.8)
8	12E91950	GATE LINK
9	13E93690	BEARING
10	50K81610	ENTRANCE GATE ASSEMBLY
11	140K71520	DADF INTERFACE PWB (REP 5.6)
12	121K93870	MAGNET
13	--	SWITCH BRACKET (NOT SPARED)
14	110K91972	DADF INPUT COVER INTERLOCK SWITCH (S05-337) (FRONT) (S05-339) (REAR)
15	20E93311	NUDGER PULLEY
16	130E91220	DOCUMENT SENSOR (Q05-312)
17	--	PWB SUPPORT (SEE PL 18.5)
18	7E83250	GEAR (21T) (BLACK)
19	7E83240	GEAR (21T) (WHITE)
20	49E91391	SENSOR ACTUATOR
21	107E94941	NUDGER HOME SENSOR (Q05-330)
22	--	SENSOR BRACKET (P/O ITEM 23)
23	130K93621	NUDGER HOME SENSOR ASSEMBLY (Q05-330)

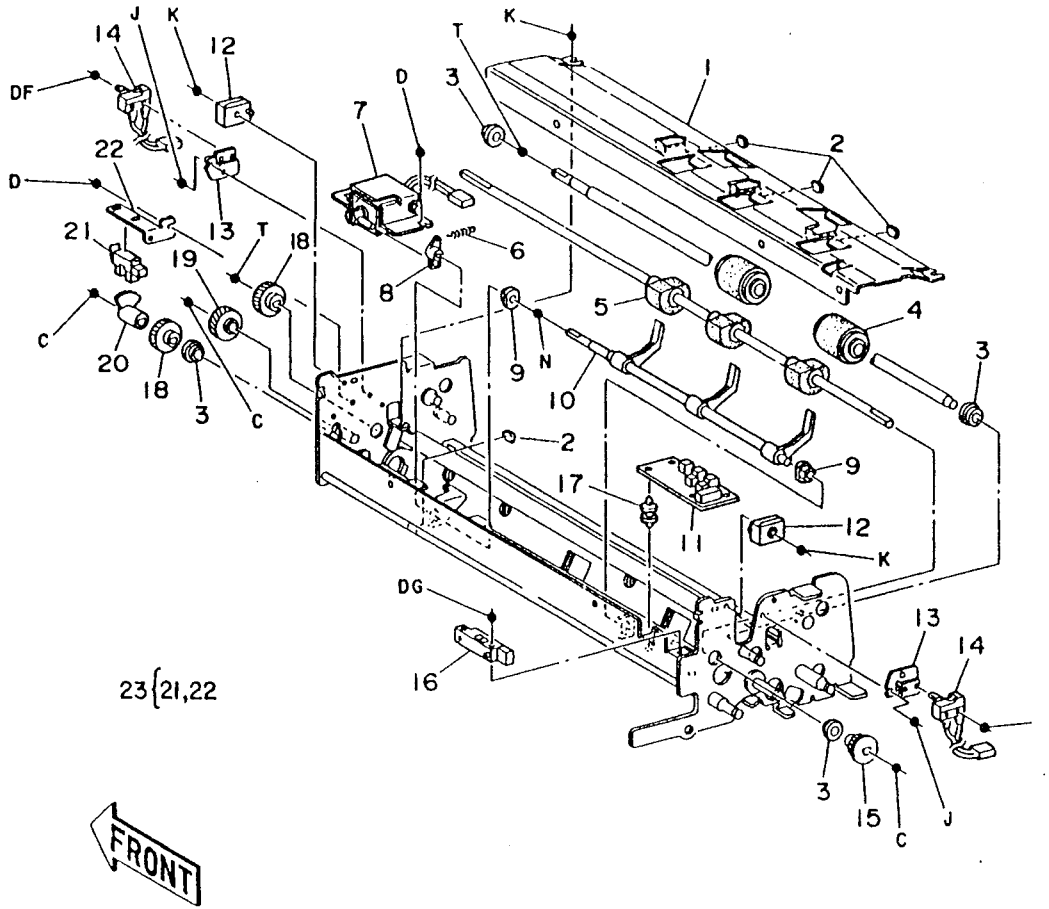

PL 12.3B Document Input Transportation (2 of 2)

Item	Part	Description
1	2K55730	INPUT GUIDE COVER
2	54K81130	DOCUMENT FEED GUIDE
3	19K91060	PAD
4	9E26941	SPRING (SILVER)
5	9E31711	SPRING (GREEN)
6	600K39840	RETARD ROLL (REP 5.9)
7	--	SHAFT (P/O ITEM 23)
8	55K90920	UPPER GUIDE ASSEMBLY
9	--	MYLAR STRIP
10	32K90820	MYLAR STRIP
11	--	INPUT GUIDE ASSEMBLY (P/O ITEM 23)
12	54K81121	PRESSURE BAR
13	9E26930	SPRING
14	12E91870	LINK
15	--	SHAFT (P/O ITEM 23)
16	--	LINK
17	121K93980	PRESSURE BAR SOLENOID (SOL05-015) (REP 5.14) (ADJ 5.1)
18	--	SENSOR BRACKET (NOT SPARED)
19	130E91220	REGISTRATION SENSOR (Q05-100) (REP 5.10) SIZE SENSOR (Q05-117) (REP 5.10) (Q05-118) (REP 5.10)
20	--	GUIDE
21	31E90920	FRONT ARM
22	31E90930	REAR ARM
23	54K83691	INPUT GUIDE ASSEMBLY
24	92E81540	LABEL

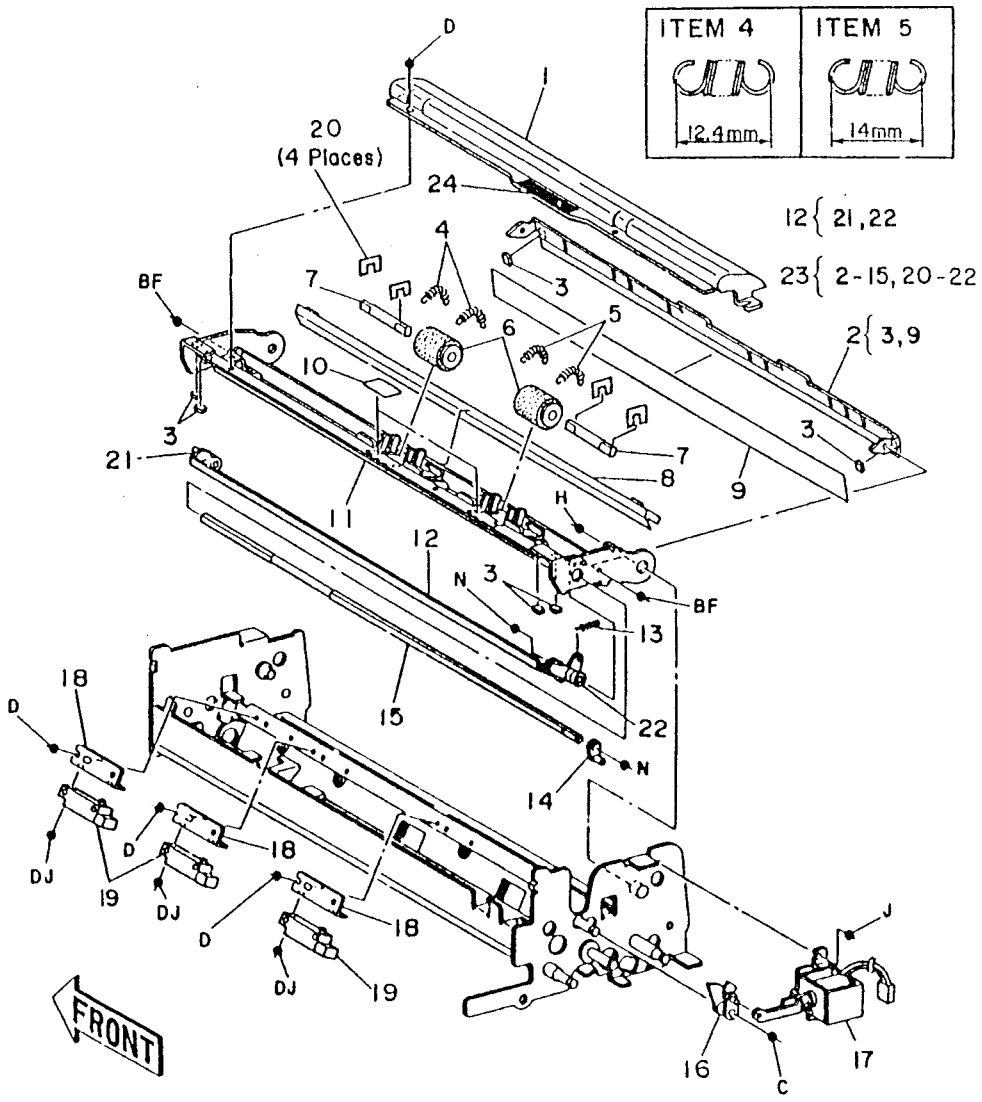

6-8-073-1

PL 12.4A Duplex Input Transportation (1 of 2)

Item	Part	Description
1	13E81150	BEARING
2	59K91420	UPPER RETURN INPUT NIP ROLL
3	59K91410	LOWER RETURN INPUT NIP ROLL
4	54K81180	UPPER INPUT GUIDE
5	54E94120	GUIDE
6	22K21950	NIP ROLLER (ADJ 5.6)
7	--	PLATEN INTERLOCK MAGNET (P/O ITEM 8)
8	54E93952	LOWER INPUT GUIDE
9	20K91230	DUPLEX PULLEY ASSEMBLY
10	13E93370	BEARING
11	20E93300	PULLEY
12	23E92460	FRONT DUPLEX BELT
13	7E83260	INVERTER DRIVE GEAR
14	--	SPACER
15	121K6701	REGISTRATION EDGE SOLENOID ASSEMBLY (SOL05-020) (REP 5.16) (ADJ 5.3)

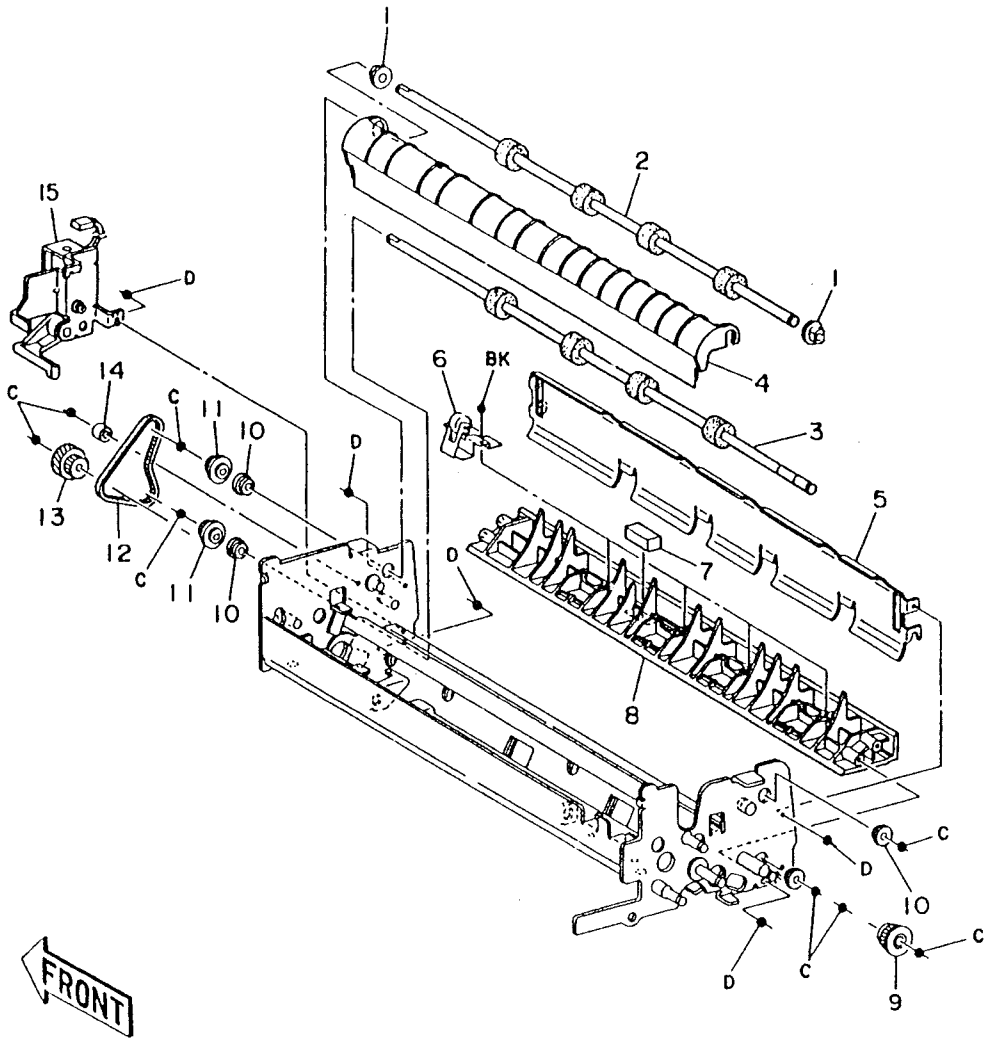

8-8-074-0

PL 12.4B Duplex Input Transportation (2 of 2)

Item	Part	Description
1	50K81542	DIVERTER GUIDE ASSEMBLY
2	9E28560	FRONT TORSION SPRING
3	--	LINK (NOT SPARED)
4	8E90931	FRONT CAM
5	--	REGISTRATION NIP ROLL (P/O ITEM 17) (REP 5.15)
6	59K98360	REGISTRATION DRIVE ROLL
7	9E28580	SPRING
8	--	BEARING (P/O ITEM 17)
9	7K91860	GEAR
10	23E92470	REAR DUPLEX BELT
11	23E92341	DADF DRIVE BELT (REP 5.3) (ADJ 5.8)
12	13P60566	BEARING
13	7K91880	REGISTRATION DRIVE GEAR
14	7K91871	DRIVE GEAR
15	8E90941	REAR CAM
16	9E28570	REAR TORSION SPRING
17	600K34760	REGISTRATION NIP ROLL KIT
18	13E90660	BEARING
19	9E39080	SPRING

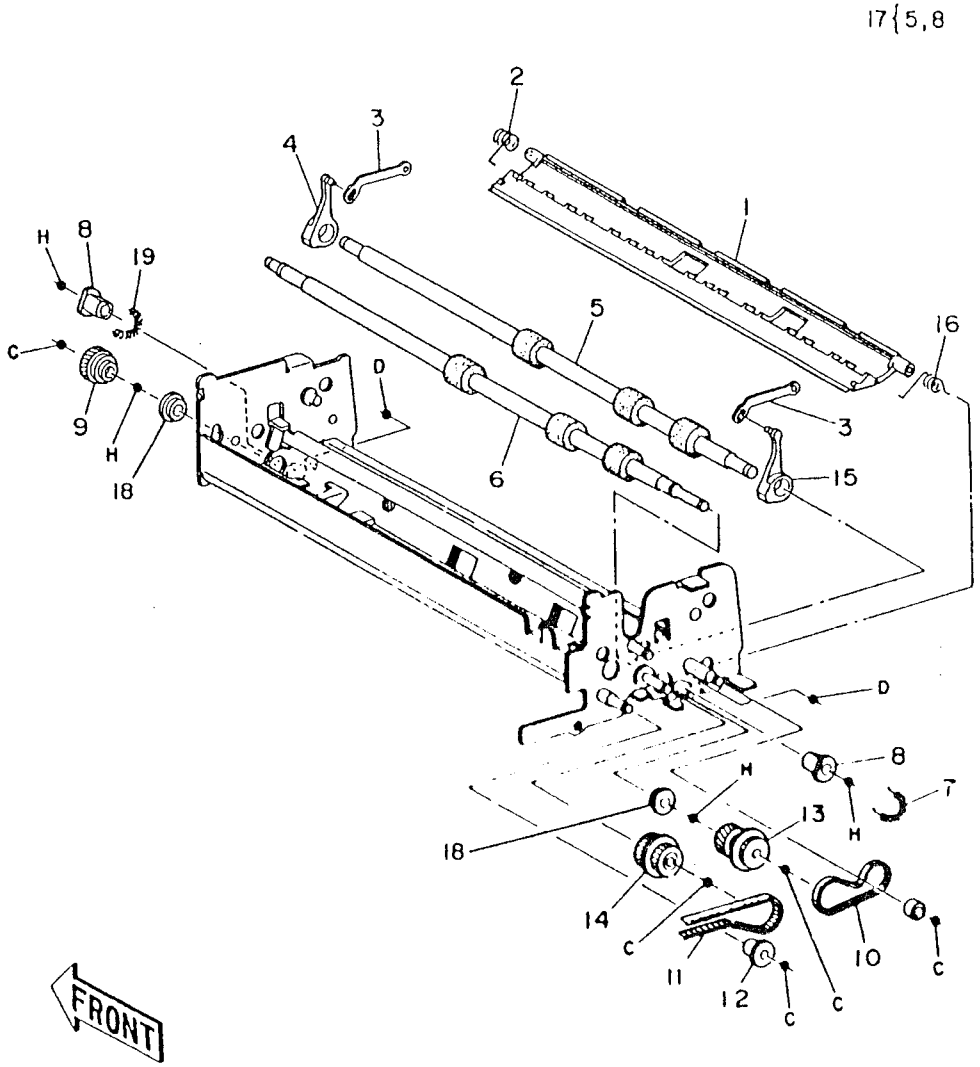

PL 12.5 Document Transportation

Item	Part	Description
1	105E92310	STATIC ELIMINATOR
2	59K91110	GRAVITY ROLLER
3	13E92400	BEARING
4	4E93370	RUBBER FOOT
5	59K91130	IDLER ROLLER
6	23E92313	DOCUMENT BELT (REP 5.11)
7	59K91121	DRIVE ROLLER
8	22K22160	DOCUMENT TRANSPORT ASSEMBLY
9	7E83141	DOCUMENT DRIVE GEAR
10	55E18780	DEFLECTOR

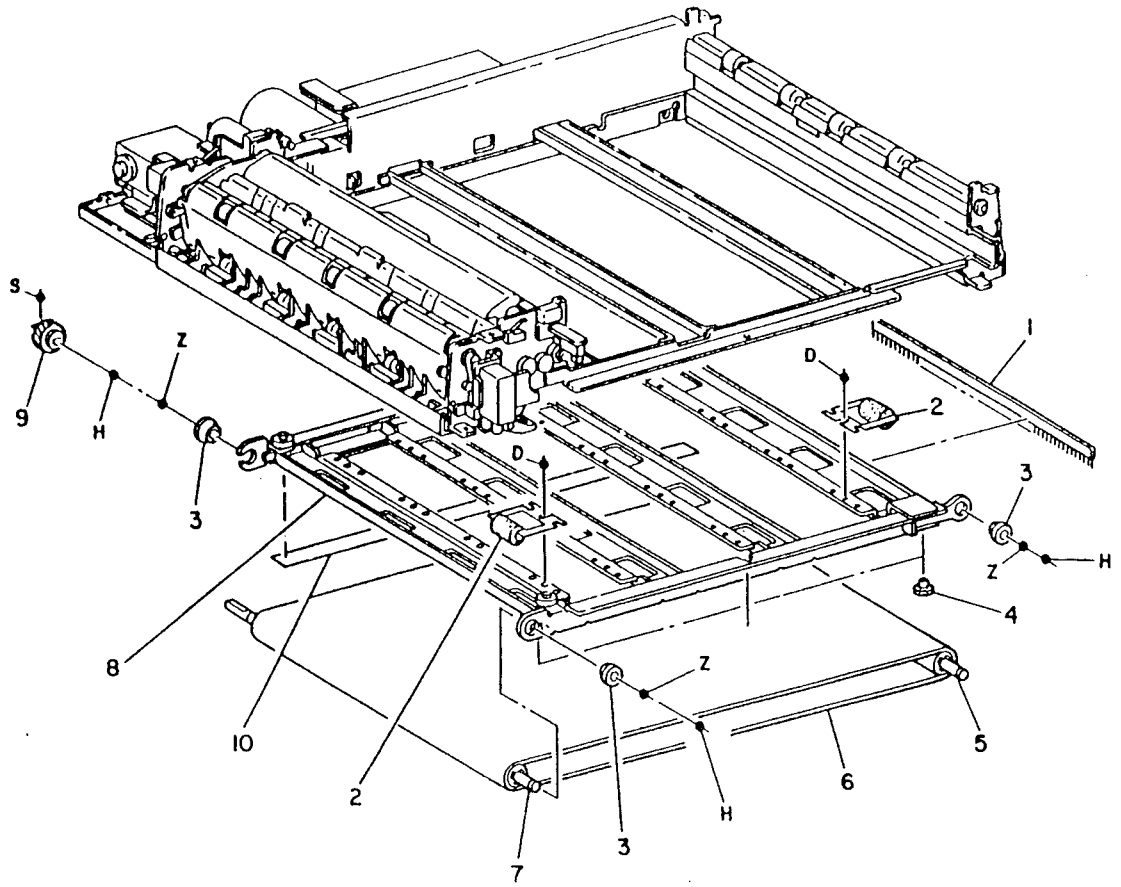

8-8-119-0

PL 12.6 Document Output Transportation

Item	Part	Description
1	59K91200	UPPER OUTPUT DRIVE ROLL
2	12K91150	CABLE SPRING
3	13E92760	BEARING
4	20E93230	PULLEY
5	20E93240	PULLEY
6	--	BRACKET (NOT SPARED)
7	110K91900	OUTPUT TRAY INTERLOCK SWITCH (S05-345) (REP 5.13)
8	130K93510	OUTPUT SENSOR (Q05-110) (REP 5.13)
9	23E92320	OUTPUT DRIVE BELT (REP 5.12) (ADJ 5.2)
10	127K94501	OUTPUT DRIVE MOTOR (MOT05-010) (REP 5.12)
11	59K91210	LOWER OUTPUT ROLLER
12	54E94021	OUTPUT GUIDE
13	59K91220	NIP ROLLER
14	54E93991	LOWER OUTPUT GUIDE

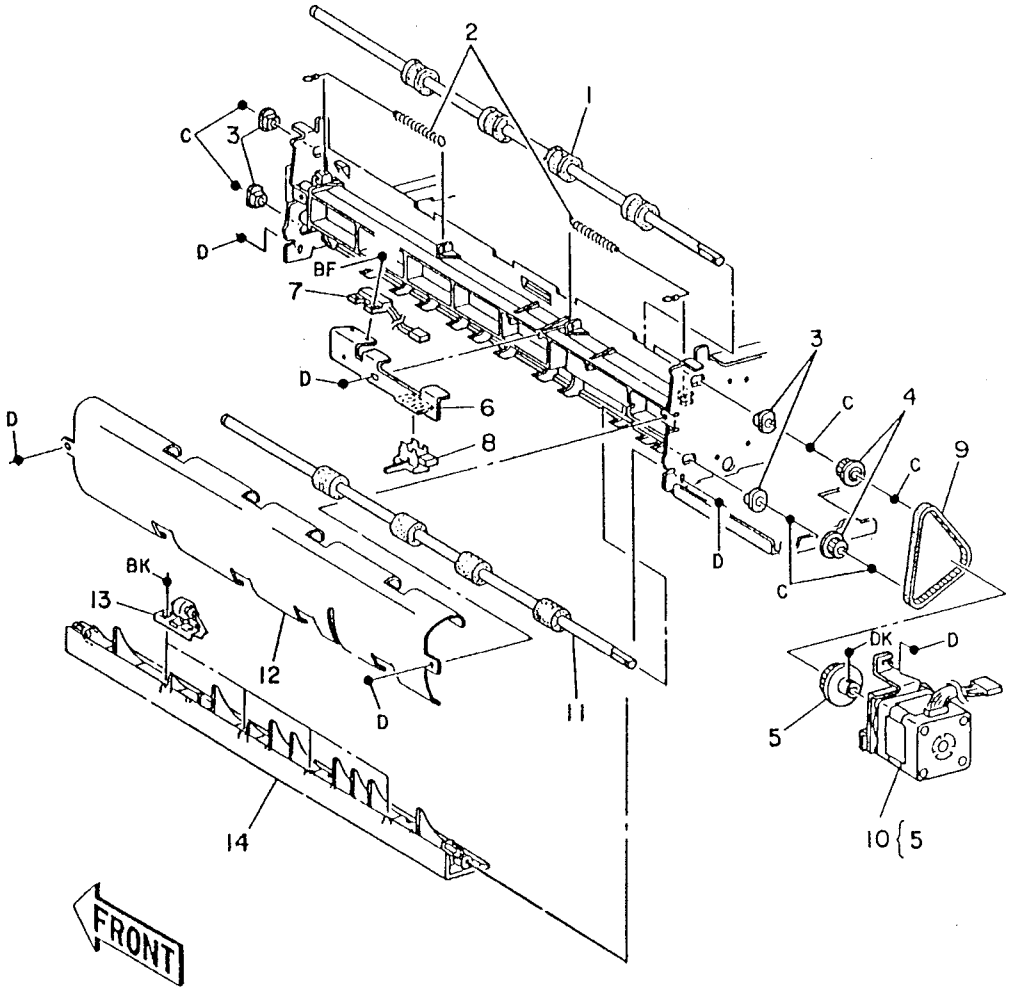

8-8-077-0

PL 12.7 Entrance Tray

Item	Part	Description
1	50K82083	ENTRANCE TRAY ASSEMBLY
2	--	ENTRANCE TRAY (P/O ITEM 1)
3	--	ENTRANCE GUIDE (P/O ITEM 1)
4	32K90810	DOCUMENT WIDTH SLIDE GUIDE
5	--	REAR BRACKET (P/O ITEM 1)
6	--	FRONT BRACKET (P/O ITEM 1)
7	--	PLATE (P/O ITEM 1)
8	9E26870	SPRING PLATE
9	50K81491	DOCUMENT OUTPUT TRAY ASSEMBLY
10	--	UPPER DOCUMENT OUTPUT TRAY (P/O ITEM 9)
11	--	LOWER DOCUMENT OUTPUT TRAY (P/O ITEM 9)
12	121E9C640	OUTPUT TRAY INTERLOCK MAGNET
13	--	LABEL (SEE ITEM 3 ON PL17.4)
14	--	LABEL
15	--	LABEL (SEE ITEM 2 ON PL17.4)
16	2K41480	ENTRANCE TRAY SUPPORT ASSEMBLY (EDIT PAD)
17	30K89320	SUPPORT BRACKET

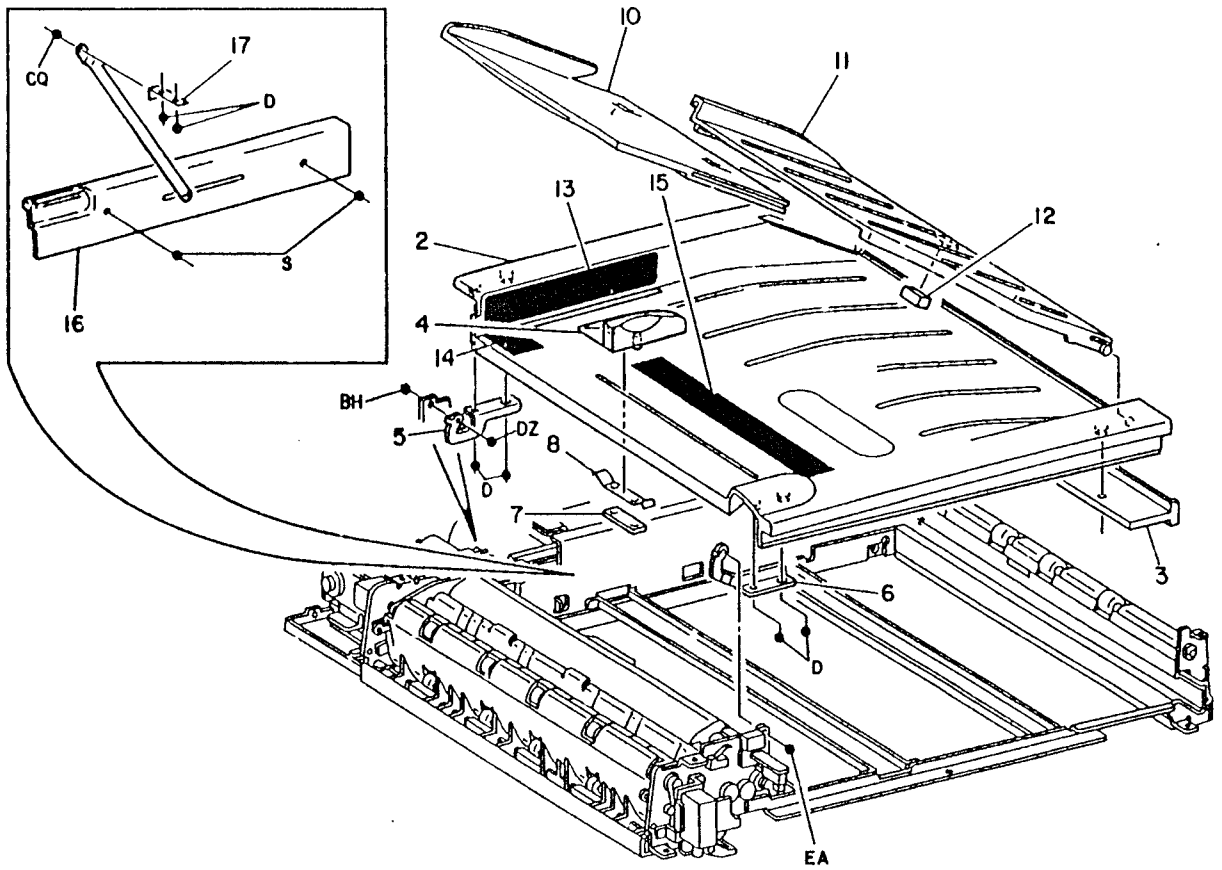

8-8-076-1

PL 13.1 Index Belt and Drive Chain

Item	Part	Description
1	68K91510	DRIVE BRACKET ASSEMBLY
2	--	SHAFT (P/O ITEM 1)
3	--	PULLEY (P/O ITEM 1)
4	--	BRACKET (P/O ITEM 1)
5	--	COLLAR (P/O ITEM 1)
6	413W8350	BEARING
7	68K91810	BELT TENSIONER ASSEMBLY
8	12K91160	INDEX CABLE (REP 11.4)
9	23E91101	CHAIN
10	23E90900	INDEX DRIVE BELT (REP 11.11) (ADJ 11.2) (282T)
11	7E82330	GEAR (30T)
12	5E90900	COLLAR
13	140K61080	SORTER CONTROL PWB (ADJ 3.1)
14	152K70360	SORTER MOTOR HARNESS

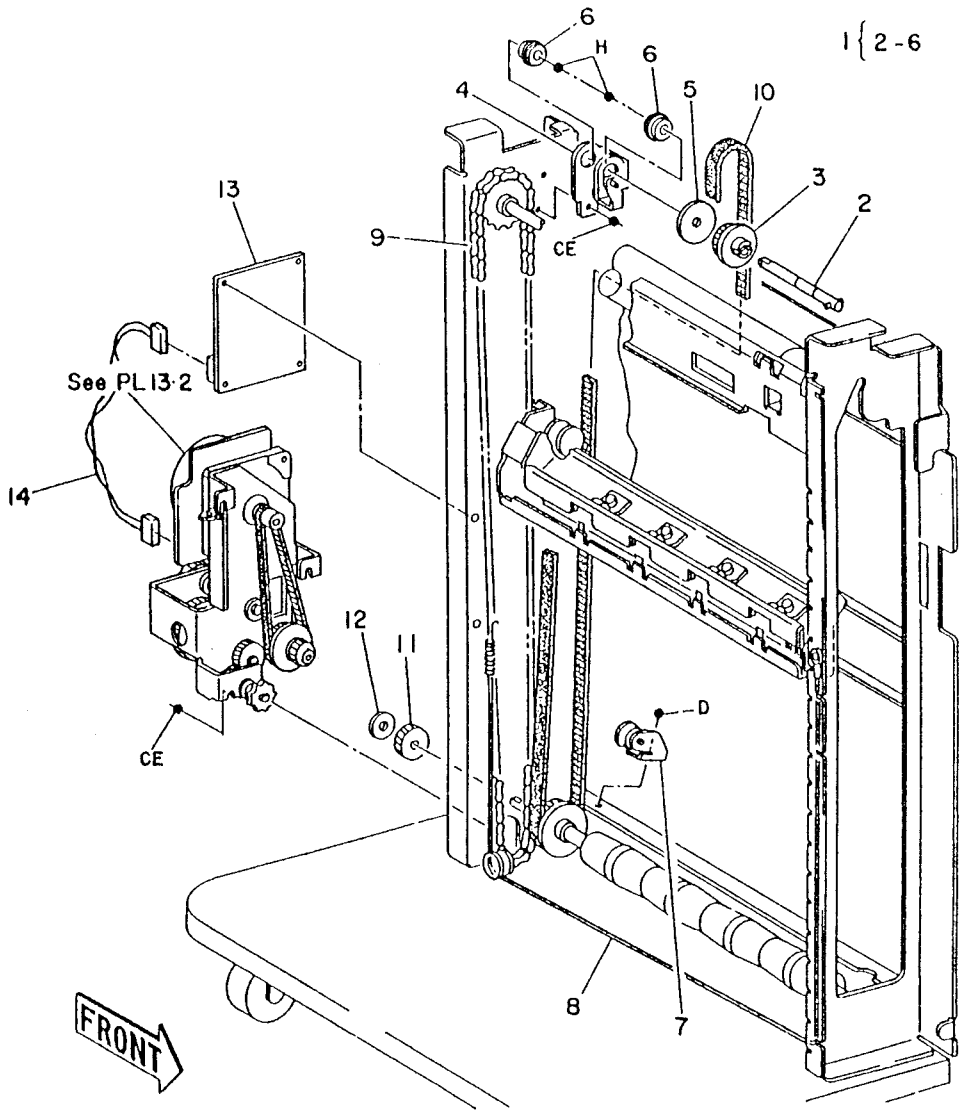

8-8-078-1

PL 12.7 Entrance Tray

Item	Part	Description
1	50K82083	ENTRANCE TRAY ASSEMBLY
2	--	ENTRANCE TRAY (P/O ITEM 1)
3	--	ENTRANCE GUIDE (P/O ITEM 1)
4	32K90810	DOCUMENT WIDTH SLIDE GUIDE
5	--	REAR BRACKET (P/O ITEM 1)
6	--	FRONT BRACKET (P/O ITEM 1)
7	--	PLATE (P/O ITEM 1)
8	9E26870	SPRING PLATE
9	50K81491	DOCUMENT OUTPUT TRAY ASSEMBLY
10	--	UPPER DOCUMENT OUTPUT TRAY (P/O ITEM 9)
11	--	LOWER DOCUMENT OUTPUT TRAY (P/O ITEM 9)
12	121E90640	OUTPUT TRAY INTERLOCK MAGNET
13	--	LABEL (SEE ITEM 3 ON PL17.4)
14	--	LABEL
15	--	LABEL (SEE ITEM 2 ON PL17.4)
16	2K41480	ENTRANCE TRAY SUPPORT ASSEMBLY (EDIT PAD)
17	30K89320	SUPPORT BRACKET

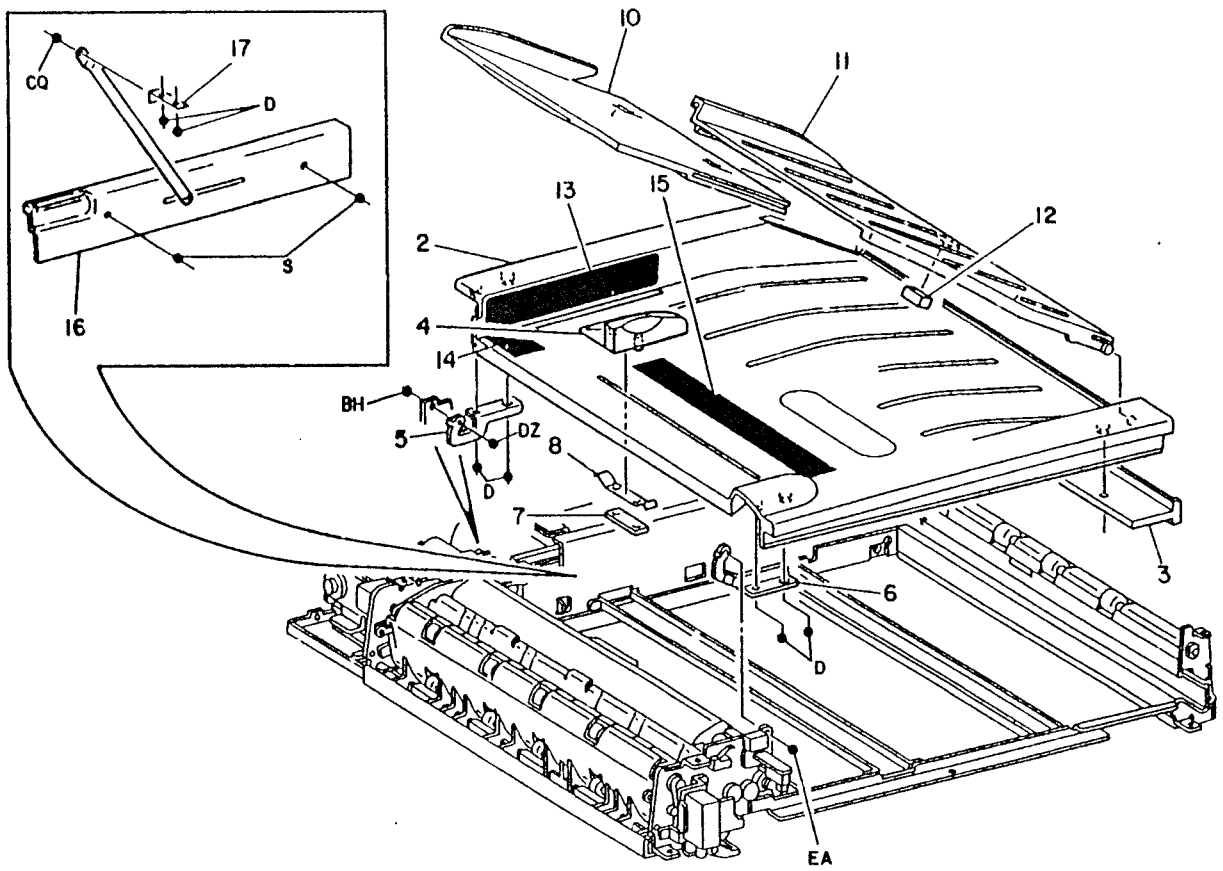

8-8-076-1

PL 13.1 Index Belt and Drive Chain

Item	Part	Description
1	68K91510	DRIVE BRACKET ASSEMBLY
2	--	SHAFT (P/O ITEM 1)
3	--	PULLEY (P/O ITEM 1)
4	--	BRACKET (P/O ITEM 1)
5	--	COLLAR (P/O ITEM 1)
6	413W8350	BEARING
7	68K91810	BELT TENSIONER ASSEMBLY
8	12K91160	INDEX CABLE (REP 11.4)
9	23E91101	CHAIN
10	23E90900	INDEX DRIVE BELT (REP 11.11) (ADJ 11.2) (282T)
11	7E82330	GEAR (30T)
12	5E90900	COLLAR
13	140K61080	SORTER CONTROL PWB (ADJ 3.1)
14	152K70360	SORTER MOTOR HARNESS

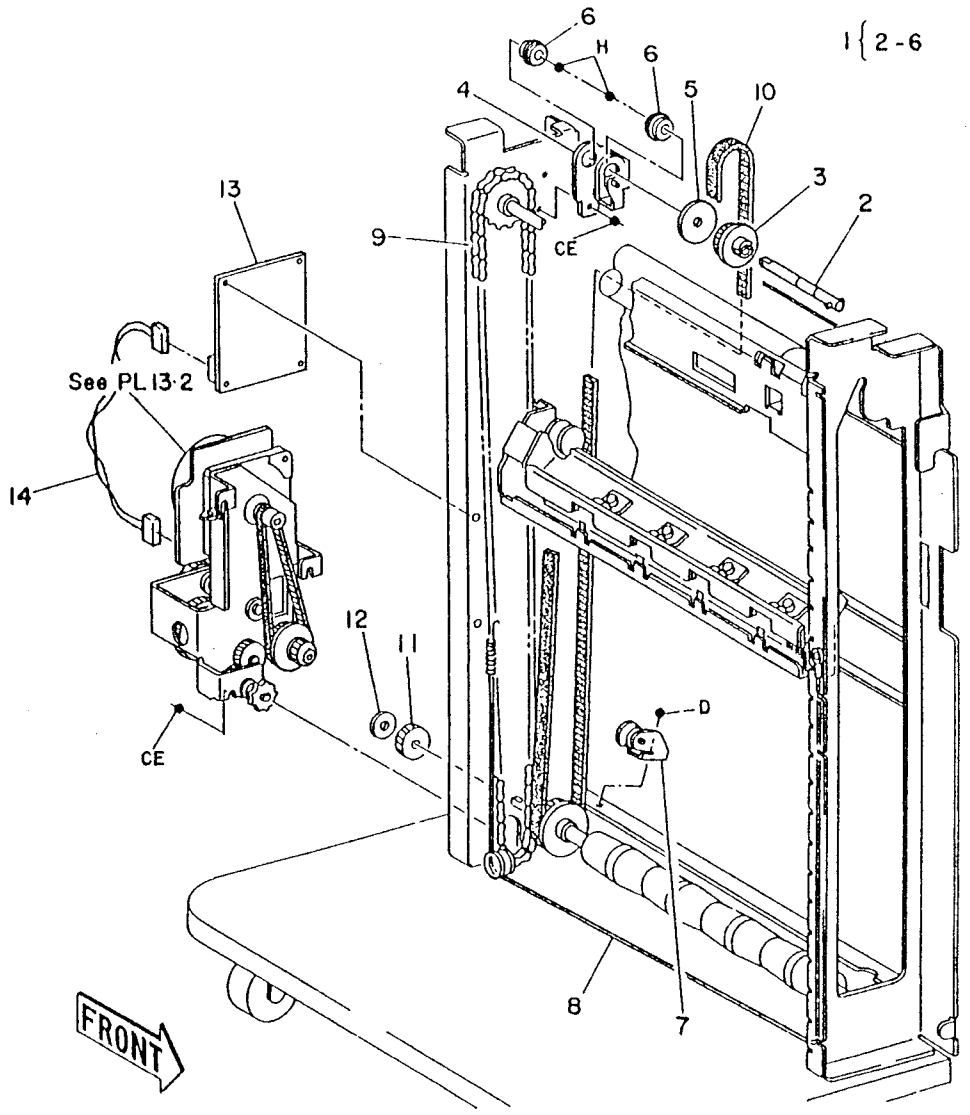

8-8-078-1

PL 13.2 Sorter Main Drive Motor Assembly

Item	Part	Description
1	7K91850	SORTER DRIVE ASSEMBLY (REP 11.2) (ADJ 11.4)
2	127K94372	SORTER MOTOR ASSEMBLY (MOT11-005) (REP 11.3)
3	7P60978	GEAR
4	121K91690	REVERSE DRIVE CLUTCH ASSEMBLY (CL11-015)
5	--	BRACKET ASSEMBLY (P/O ITEM 1)
6	23E90890	SORTER DRIVE BELT
7	--	PULLEY (P/O ITEM 1)
8	--	PULLEY (P/O ITEM 1)
9	7E80570	GEAR (30T)
10	7E82330	GEAR (30T)
11	--	SHAFT (P/O ITEM 1)
12	7P62224	SPROCKET
13	--	SPACER (P/O ITEM 1)
14	7E80580	GEAR (24T)
15	--	SPACER (P/O ITEM 1)
16	413W8350	BEARING
17	--	INDEX SOLENOID (SOL11-020)
18	31E90770	INDEX ARM DOWN
19	31E90760	INDEX ARM UP
20	9E80190	SPRING
21	7E83300	GEAR
22	5K90391	CLUTCH ASSEMBLY
23	7E93280	GEAR
24	7K90790	ONE WAY GEAR
25	--	SHAFT ASSEMBLY (P/O ITEM 1)

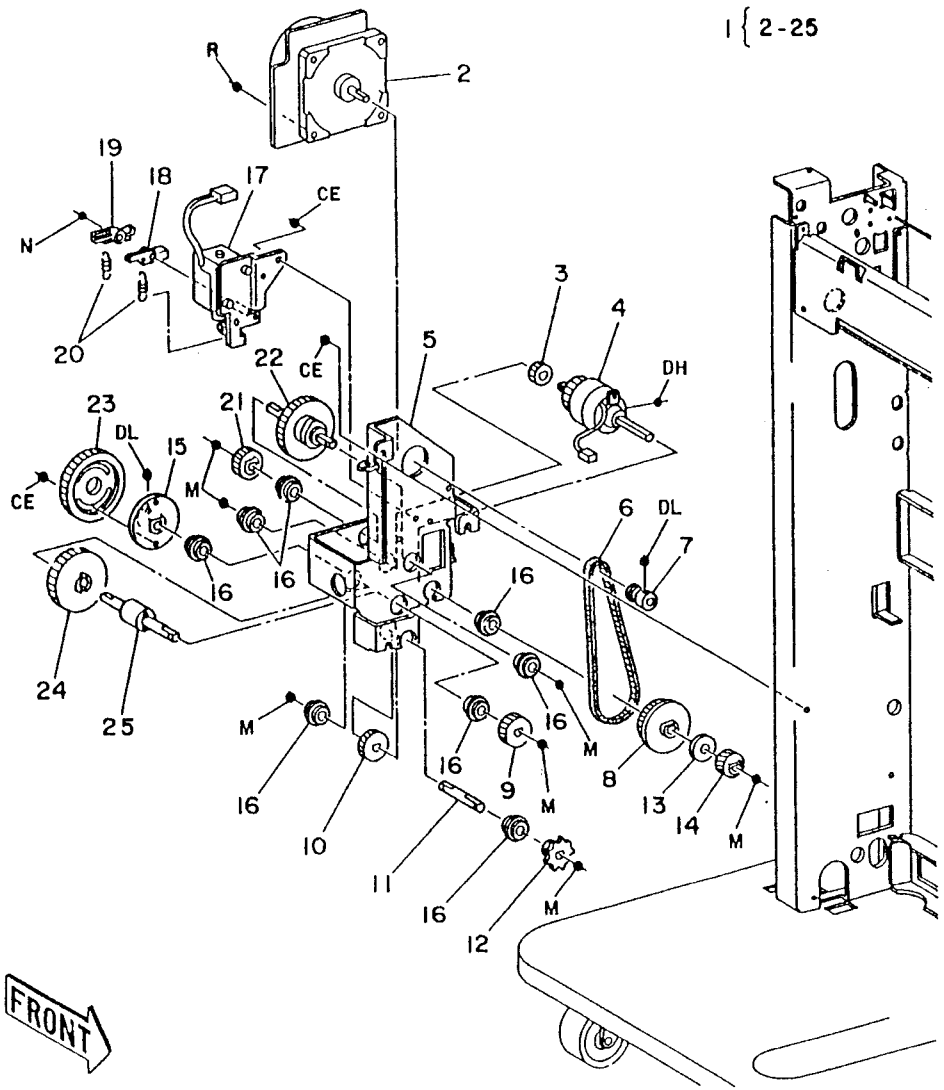

8-8-079-1

PL 13.3 Index Assembly

Item	Part	Description
1	41K91580	INDEX ASSEMBLY (REP 11.12) (ADJ 11.4)
2	5E90880	COLLAR
3	9E84000	SPRING PLATE
4	15K94871	PLATE ASSEMBLY
5	--	PULLEY (P/O ITEM 1)
6	22E93620	PINCH ROLLER
7	23E90910	BIN ENTRY DRIVE BELT
8	--	BEARING
9	105E92450	STATIC ELIMINATOR
10	38K92690	GUIDE ASSEMBLY
11	--	REAR BRACKET (P/O ITEM 1)
12	--	FRONT BRACKET (P/O ITEM 1)
13	59K90480	ROLLER ASSEMBLY
14	38K92430	PAPER GUIDE ASSEMBLY
15	105K90930	STATIC ELIMINATOR
16	413W77559	BEARING
17	22E93830	ROLLER
18	32E92021	REGISTRATION GUIDE
19	--	PULLEY (P/O ITEM 1)
20	9E83990	SPRING
21	7E93320	SPROCKET
22	413W8350	BEARING

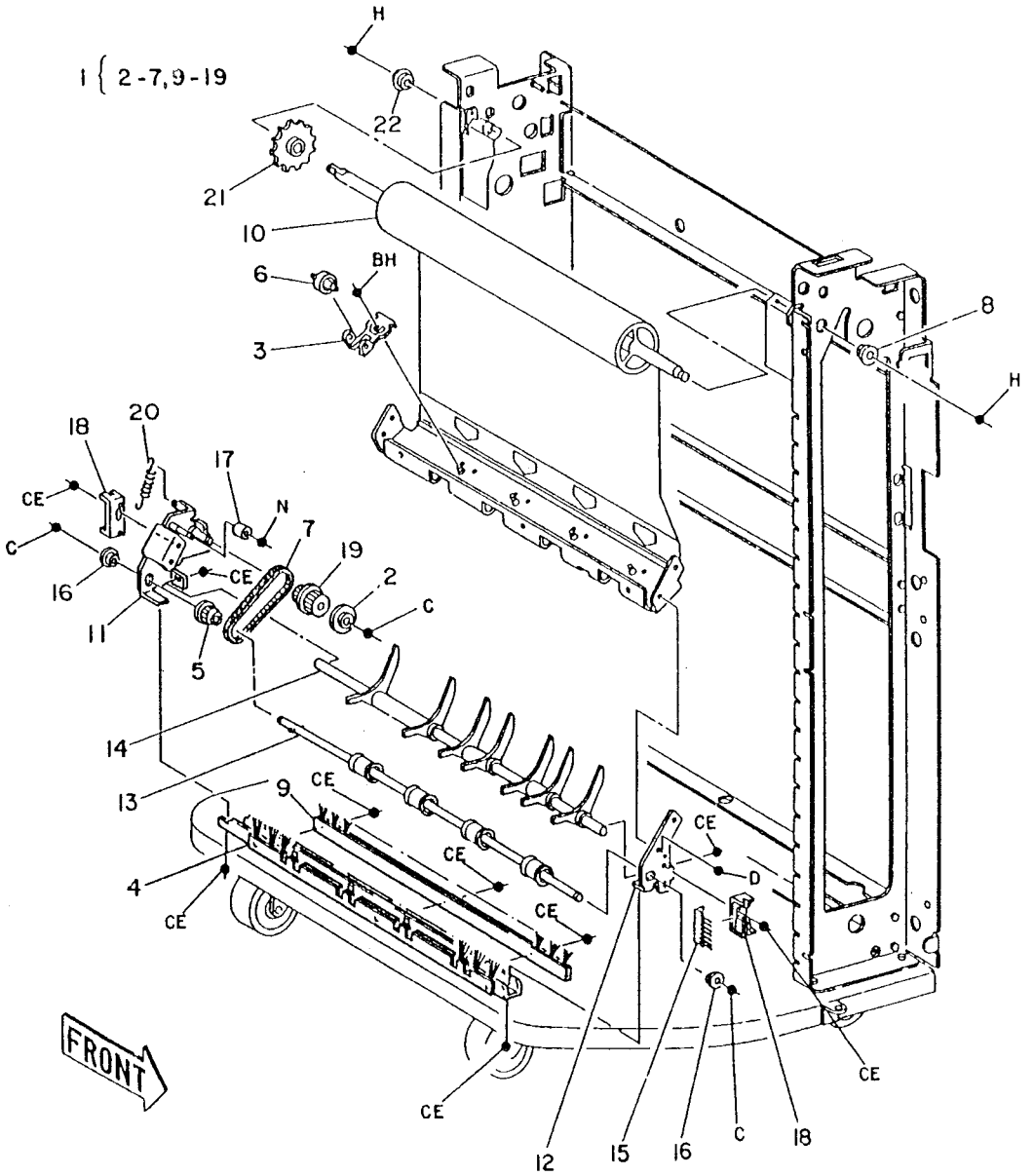

8-8-080-0

PL 13.4 Vertical Index Drive

Item	Part	Description
1	121K93840	DIVERTER SOLENOID ASSEMBLY (SOL11-010) (REP 11.5) (ADJ 11.3)
2	--	DIVERTER SOLENOID (SOL11-010)(P/O ITEM 1)
3	--	ARM (P/O ITEM 1)
4	--	PIN (P/O ITEM 1)
5	9E27170	SPRING
6	--	ENTRANCE GUIDE (NOT SPARED)
7	130K93540	OUTPUT TRAY SENSOR (Q11-100) (REP 11.10)
8	54K81300	REVERSE CHUTE ASSEMBLY
9	31E90840	ARM GATE
10	6K92461	DIVERTER GATE
11	--	ARM SHAFT (NOT SPARED)
12	20E18580	IDLER PULLEY
13	6K92560	UPPER ROLL SHAFT
14	6K92550	LOWER ROLL SHAFT
15	--	PULLEY
16	--	COLLAR (P/O ITEM 14)
17	6K92570	BELT TENSION SHAFT ASSEMBLY
18	11K90830	TENSION LEVER ASSEMBLY
19	9E26790	SPRING
20	--	TENSION LINK (NOT SPARED)
21	600K34520	VERTICAL DRIVE BELT KIT (QTY.4) (REP 11.6)
22	413W75959	BEARING
23	413W8350	BEARING

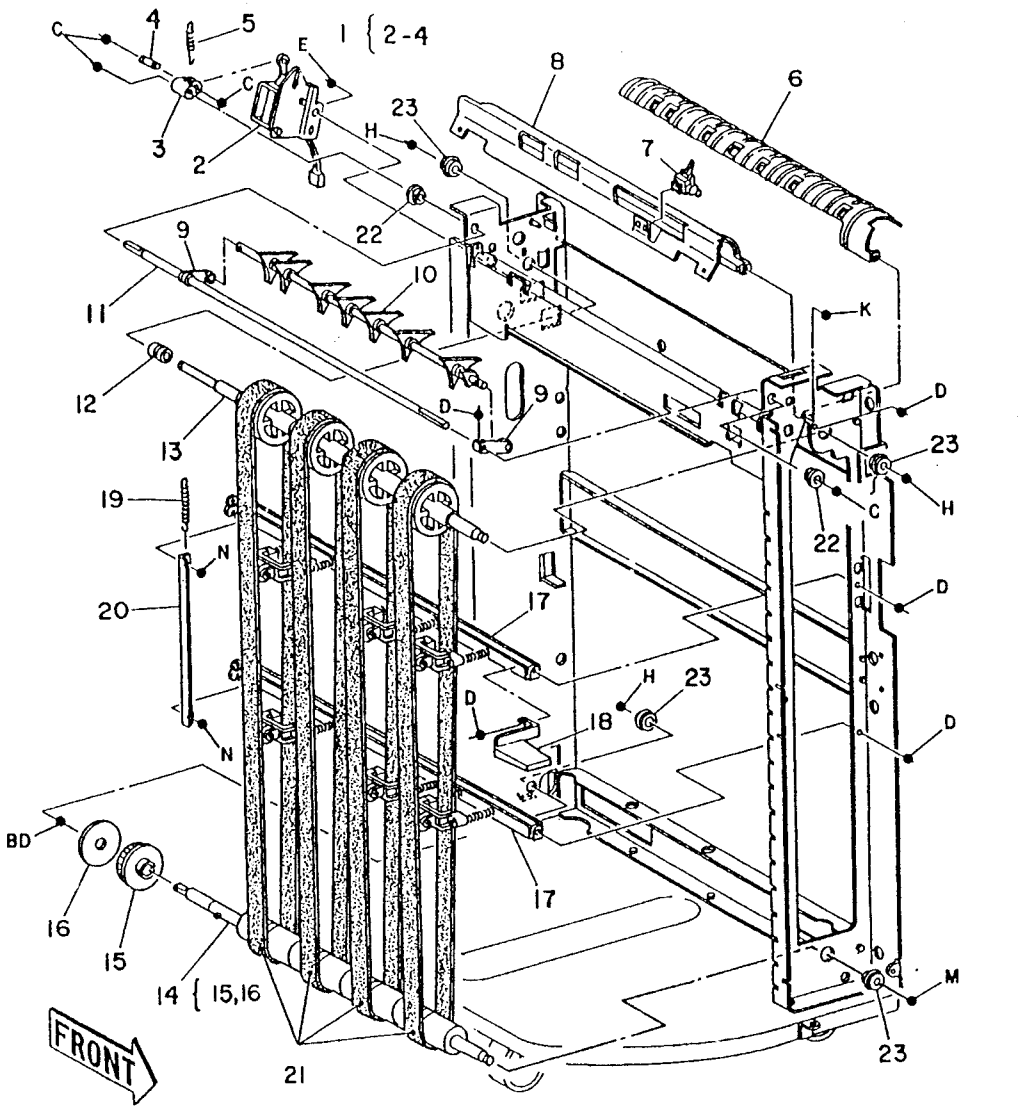

PL 13.5 Sorter Interlock Switches and Castors

Item	Part	Description
1	17E91710	CASTOR (ADJ 11.1)
2	110E90532	LOWER LIMIT SENSOR (Q11-320), UPPER LIMIT SENSOR (Q11-322)
3	--	BRACKET ASSEMBLY (NOT SPARED)
4	21E91040	CAP
5	12K91090	LINK ASSEMBLY
6	--	PIVOT BRACKET (NOT SPARED)
7	--	LINK (NOT SPARED)
8	--	PIN
9	9E27160	SPRING
10	19E93310	REAR FINGER
11	19E93320	FRONT FINGER
12	14E93060	SENSOR COVER
13	130E90550	BIN ENTRY SENSOR (Q11-110) (REP 11.9)
14	130E90540	BIN ENTRY LED
15	--	SENSOR BRACKET (NOT SPARED)
16	110E91000	SORTER DOOR INTERLOCK SWITCH (S11-314)
17	110E91120	SORTER TOP COVER INTERLOCK SWITCH (S11-316), SORTER INTERLOCK SWITCH (S11-310)
18	110E91220	SORTER TOP COVER INTERLOCK SWITCH (S11-316)
19	--	BRACKET (NOT SPARED)
20	110E91210	SORTER INTERLOCK SWITCH (S11-310)
21	120E92060	ACTUATOR
22	68K91151	BRACKET
23	32E92200	WIRE GUIDE
24	68K91501	SORTER SWITCH ASSEMBLY
25	9E80612	SPRING
26	600K35130	CASTOR LOCKING PLATE KIT
27	--	LH BRACKET (P/O ITEM 26)
28	--	RH BRACKET (P/O ITEM 26)

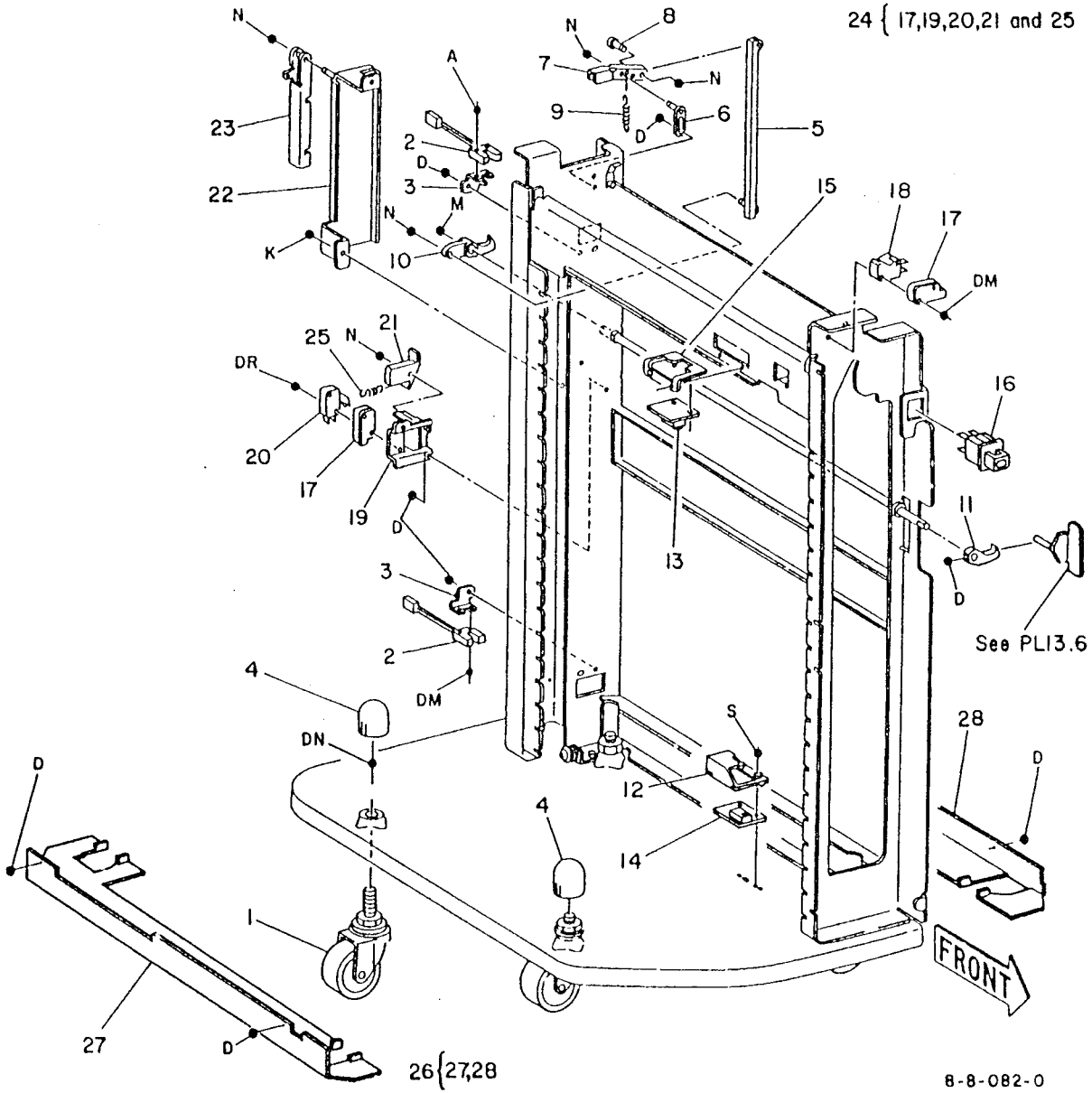

PL 13.6 Sorter Covers

Item	Part	Description
1	2K62081	SORTER TOP COVER (REP 11.7)
2	105E92111	STATIC ELIMINATOR
3	--	LABEL
4	26E25550	SCREW (WITH TAG 903)
5	--	HARNESS ASSEMBLY
6	120E92301	ACTUATOR
7	3E19210	LATCH GRIP
8	--	SHAFT
9	19E93330	FRONT FINGER
10	13E90840	BEARING
11	19E93340	REAR FINGER
12	9P62326	SPRING
13	4E93421	DAMPER
14	38K8850	ENTRANCE CHUTE
15	22K22740	PINCH ROLLER
16	2E54192	SORTER REAR COVER (WITH TAG 901)
17	68K90930	HINGE
18	48K1140	SORTER DOOR ASSEMBLY
19	120E92280	ACTUATOR
20	91K7540	JAM CLEARANCE LABEL
21	--	RAIL ASSEMBLY (P/O ITEM 22)
22	600K34823	SORTER DOCKING KIT
23	93P60081	SPANNER
24	606K3720	FLOOR PLATE KIT (WITH TAG 949)
25	--	REAR LATCH PLATE (NOT SPARED)
26	--	FRONT LATCH PLATE (NOT SPARED)
27	2E56222	SORTER BLANK PANEL (WITH TAG 902)
28	--	SUPPORT BRACKET (P/O ITEM 22)

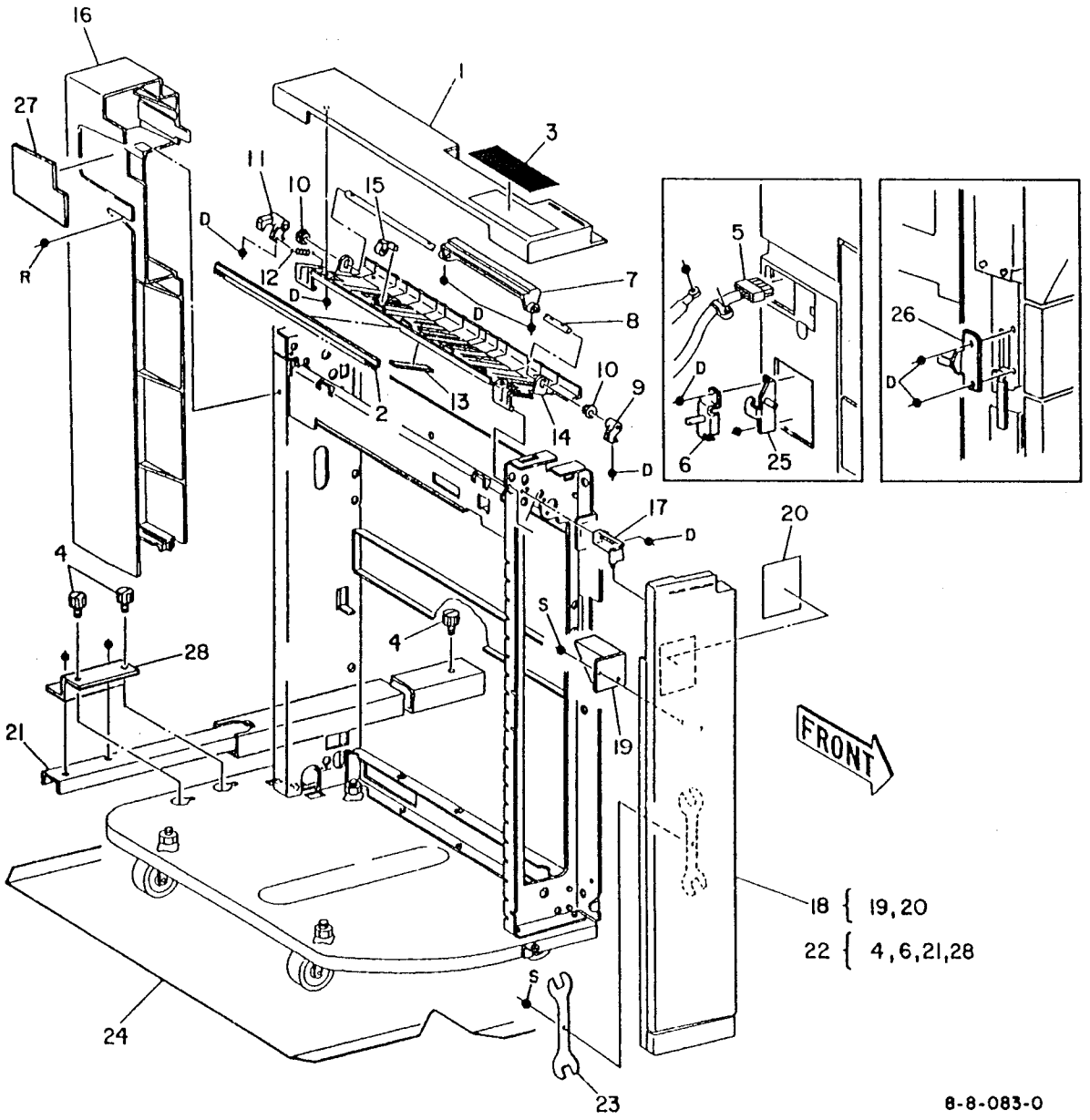

PL 13.7 Sorter Bin Tray and Output Tray

Item	Part	Description
1	--	OUTPUT TRAY ROLLER SHAFT
2	--	PULLEY (P/O ITEM 1)
3	23E92300	OUTPUT TRAY DRIVE BELT
4	50K81590	OUTPUT TRAY ASSEMBLY (REP 11.8)
5	92E94550	LABEL
6	50E92191	BIN TRAY ASSEMBLY
7	--	UPPER PLATE GUIDE
8	--	LOWER PLATE GUIDE
9	413W77559	BEARING

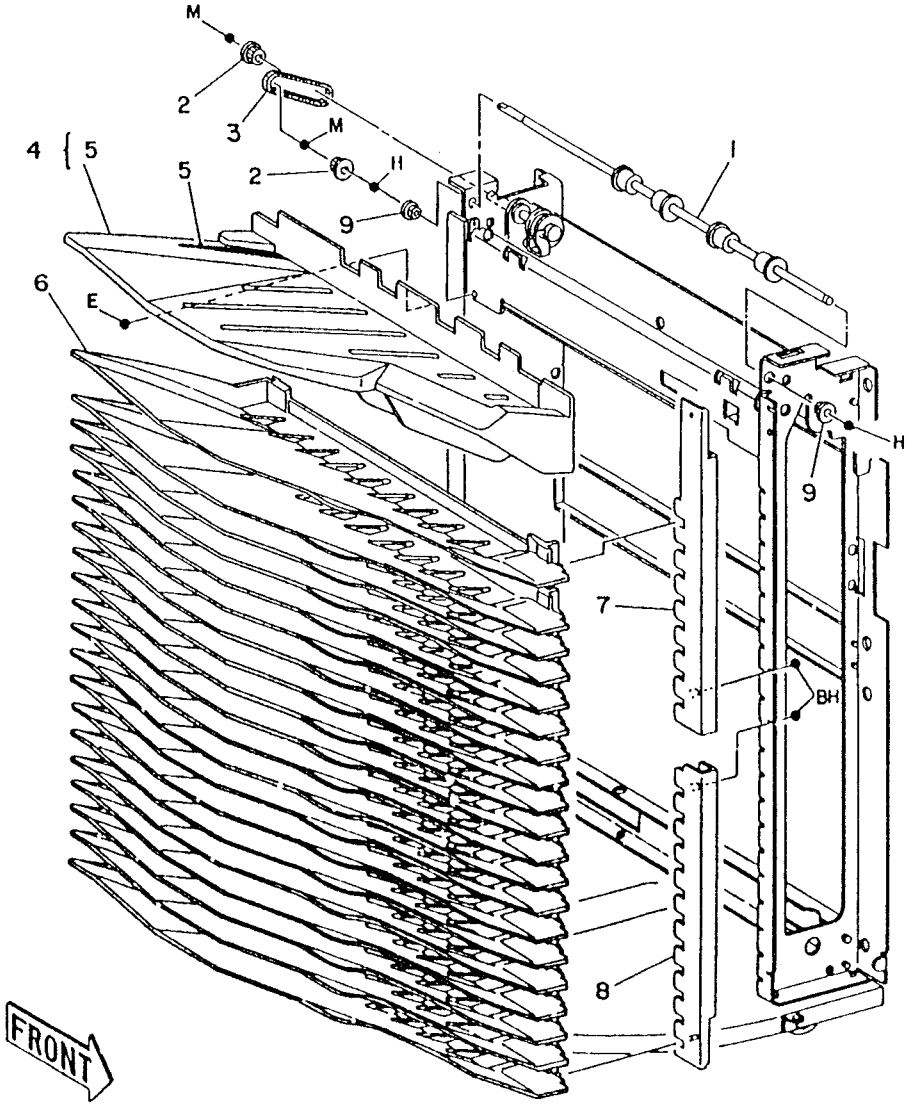

8-8-084-0

PL 13.8 Manual Stapler (W/Tag 901)

Item	Part	Description
1	2E42802	STAPLER TOP COVER
2	110E5121	INTERLOCK SWITCH (S11-3)
3	42E771	GUARD BRUSH
4	--	LABEL
5	14E16961	STAPLER ASSEMBLY (REP 11.13, 14) (ADJ 11.6)
6	2E52872	INFILL COVER
7	108E920	FUSE (F1-3A 250V)
8	140K62510	MANUAL STAPLER PWB
9	--	PWB GUARD
10	--	STAPLER SUPPORT (NOT SPARED)
11	--	STAPLE CARTRIDGE (SEE NOTE)
12	56E2294	STAPLER BASE PLATE
13	2E42793	STAPLER MIDDLE COVER
14	2E42812	STAPLER LOWER COVER
15	16E8240	BUSH
16	107K1262	LOW STAPLE LED ASSEMBLY

NOTE 1 : For Staple Cartridge see PL 16.1 Consumables.

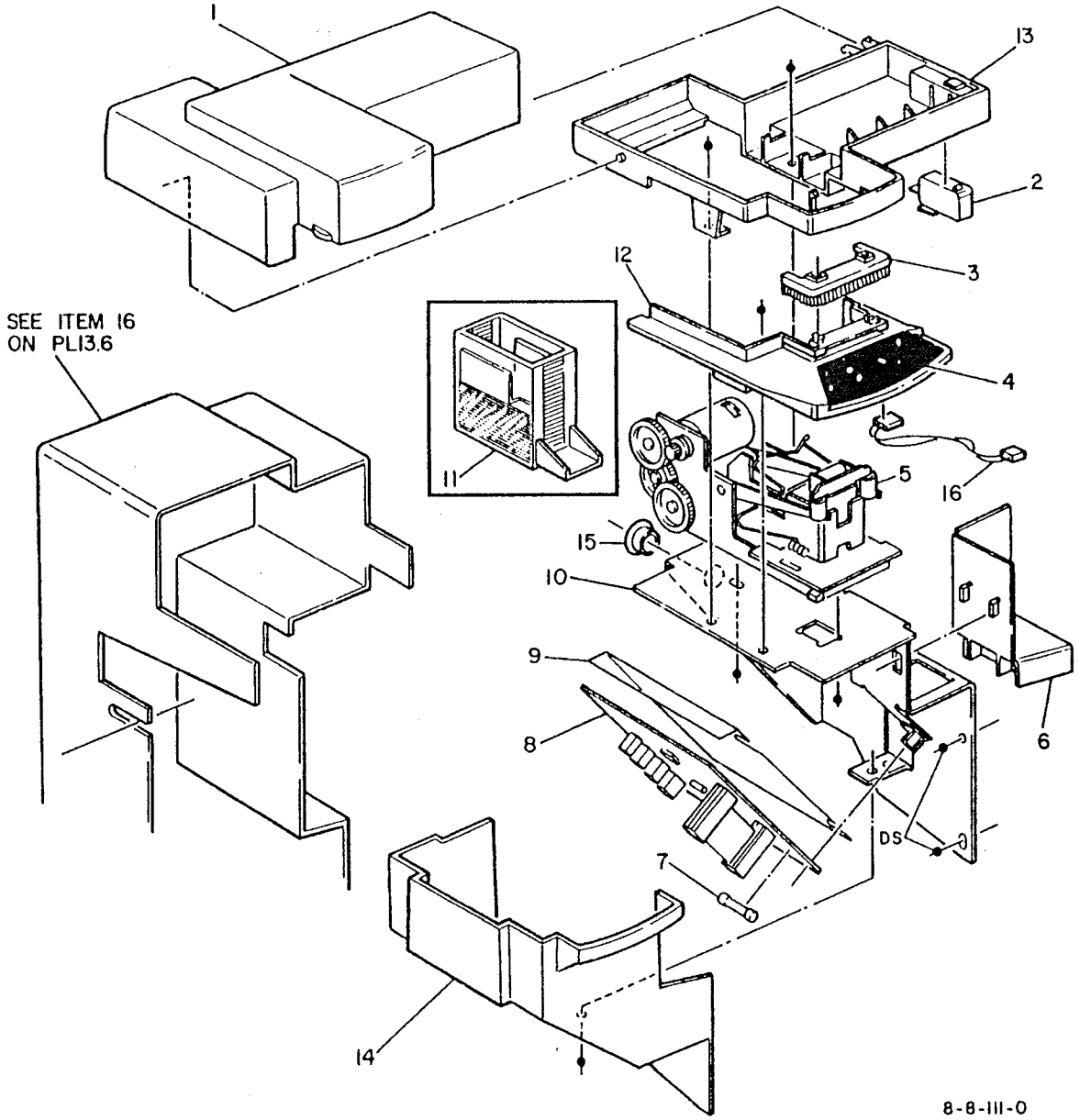

PL 14.1 Bin Tray, Output Tray and Castors

Item	Part	Description
1	50K82830	BIN TRAY ASSEMBLY (1 - 19) (REP 11A.10) (ADJ 11A.2)
2	2K41221	OUTPUT TRAY ASSEMBLY (REP 11A.10) (ADJ 11A.2)
3	--	COVER (NOT SPARED)
4	2K38720	INNER COVER
5	48E94170	BIN HOME COVER
6	9E33470	BIN HOME SPRING
7	120E92910	BIN HOME ACTUATOR
8	--	LOWER COVER (NOT SPARED)
9	17E91710	CASTOR (ADJ 11A.1)
10	--	TOOL (NOT SPARED)
11	--	JIG (NOT SPARED)
12	50K86640	LOWER BIN TRAY (REP 11A.10) (ADJ 11A.2)
13	--	FLOOR PLATE (NOT SPARED)

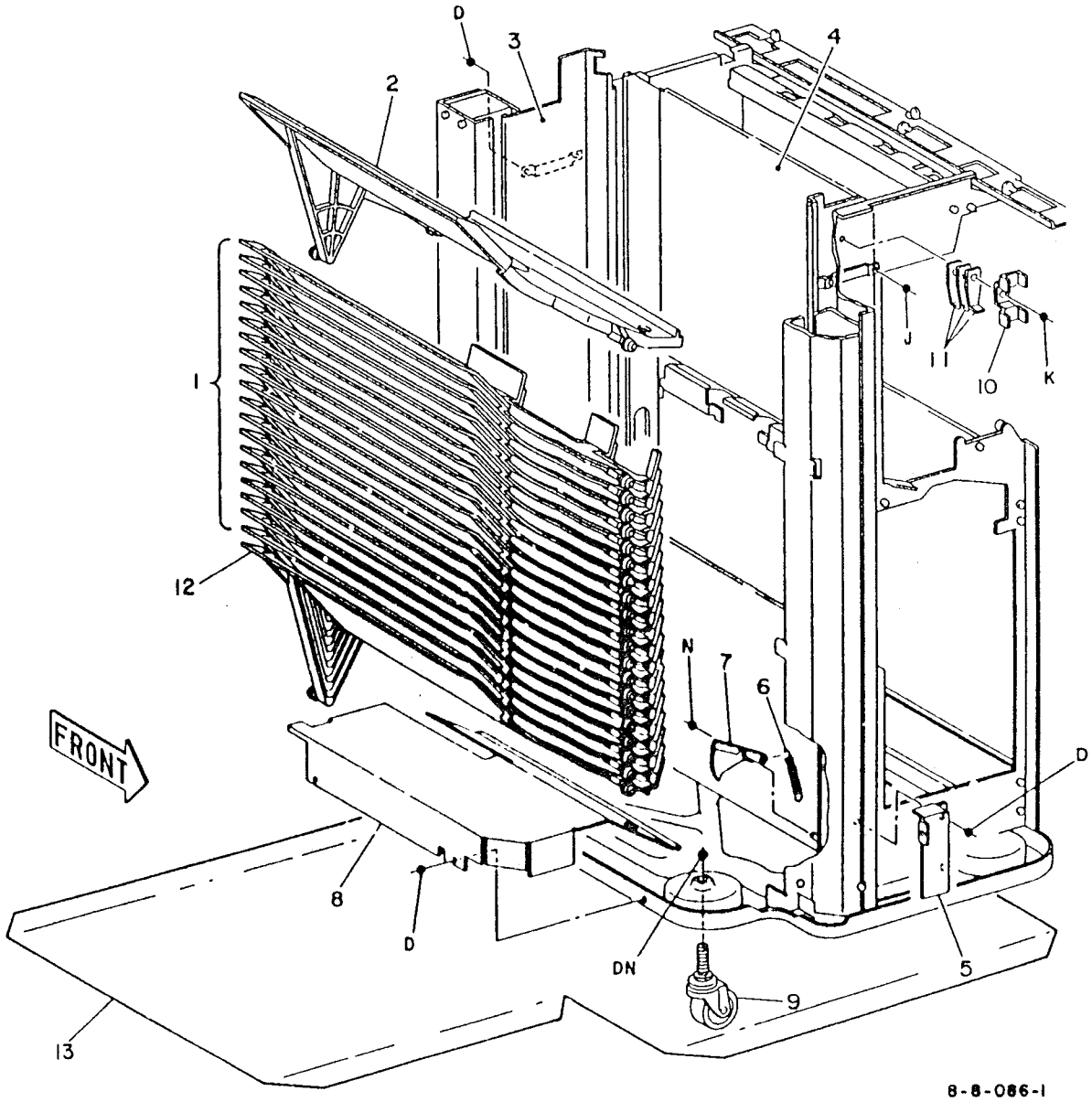

PL 14.2 Spiral Cam Assembly and Drive Motor

Item	Part	Description
1	8K90305	REAR LH SPIRAL CAM ASSEMBLY (REP 11A.15)
2	--	REAR LH SPIRAL CAM (P/O ITEM 1)
3	--	SHAFT COVER (P/O ITEM 1)
4	110K92270	LOWER LIMIT SWITCH (S11-2) (REP 11A.12)
5	130K94820	CAM POSITION SENSOR (Q11-395) (REP 11.14)
6	120E92900	ACTUATOR
7	118E92280	BIN BUSH (REP 11A.16)
8	8K90310	REAR RH SPIRAL CAM ASSEMBLY (REP 11A.15)
9	8K90290	FRONT SPIRAL CAM ASSEMBLY (REP 11A.15)
10	--	FRONT SPIRAL CAM (P/O ITEM 9)
11	--	SHAFT COVER (P/O ITEM 9)
12	130K94830	BIN HOME SENSOR (Q11-365) (REP 11A.13)
13	127K81540	BIN DRIVE MOTOR (MOT11-075) (REP 11A.6)
14	--	DAMPER (NOT SPARED)
15	68K70040	DRIVE BRACKET ASSEMBLY
16	23E92870	BIN MOTOR BELT
17	23E92860	BIN DRIVE BELT (REP 11A.7)
18	110K92260	UPPER LIMIT SWITCH (S11-1) (REP 11A.11)
19	22E94240	PULLEY
20	413W77559	BEARING
21	--	LOWER COVER

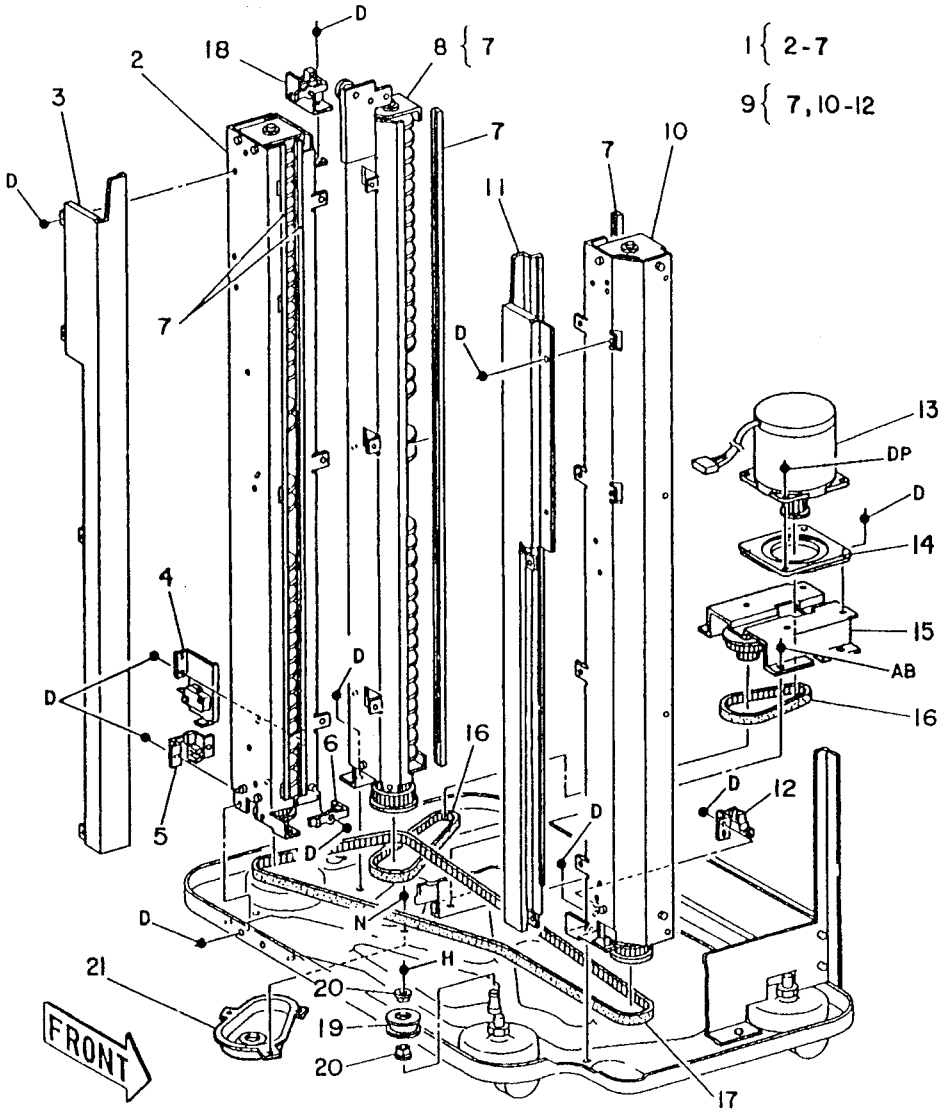

PL 14.3 Stapler PWB and Tamper

Item	Part	Description
1	140K36041	SORTER AUTO STAPLER CONTROL PWB (SEE NOTE 1)
2	108P68363	FUSE (125V 4A)
3	140K35500	RELAY PWB
4	108P68380	FUSE (125V 5A)
5	140K31410	BIN DRIVE PWB
6	23E92880	TAMPER DRIVE BELT (REP11A.3)
7	--	TAMPER PULLEY (NOT SPARED)
8	6E83431	TAMPER DRIVE SHAFT
9	29E92190	PIN
10	21K90430	UPPER CAP
11	--	TAMPER BAR (REP 11A.4)
12	21K90420	LOWER CAP
13	130K94780	TAMPER HOME SENSOR (Q11-385) (REP 11A.5)
14	413W75659	BEARING
15	--	TAMPER COVER (NOT SPARED)
16	142K90530	BIN PAPER SENSOR FILTER
17	130K94770	BIN PAPER SENSOR (Q11-180)
18	130K94760	BIN PAPER LED
19	20E93801	TAMPER PULLEY
20	4E93960	DAMPER
21	5E92720	COUPLING
22	127K81530	TAMPER MOTOR (MOT11-065) (REP 11A.3)
23	68E71540	PWB SUPPORT
24	20E93791	TAMPER PULLEY
25	--	IDLER ROLLER
26	108P68364	FUSE (125V 5A)

NOTE 1: For EPROMS refer to PL 8.4

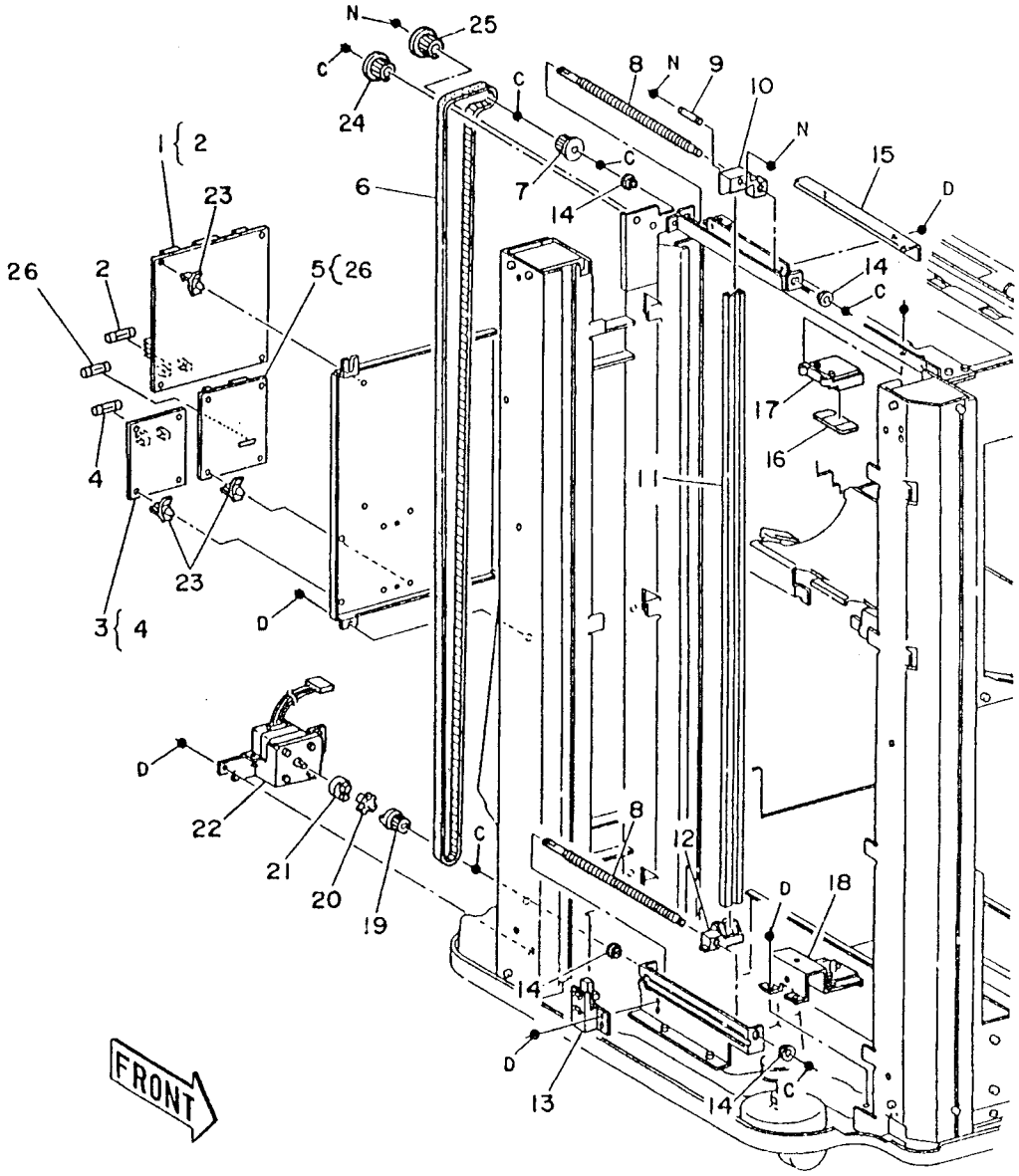

8-8-088-I

PL 14.4 Transport Motor and Belts

Item	Part	Description
1	127K80700	TRANSPORT MOTOR (MOT11-070) (REP 11A.8)
2	23E92900	TRANSPORT MOTOR BELT (REP 11A.9) (ADJ 11A.3)
3	20E93250	IDLER PULLEY
4	413W75959	BEARING
5	20K91641	PULLEY ASSEMBLY
6	9E33500	SPRING
7	23E92910	TRANSPORT DRIVE BELT (REP 11A.9) (ADJ11A.3)
8	20K91651	DRIVE PULLEY (SEE NOTE 1)
9	20E90710	IDLER PULLEY
10	20K91600	TENSION PULLEY
11	13E80970	BEARING
12	--	WASHER (NOT SPARED)
13	20E93820	TRANSPORT DRIVE PULLEY (20/30T)
14	108E90420	FUSE (250V 0.8A)
15	20E93840	PULLEY (17T)
16	--	SPACER (NOT SPARED)
17	59K93620	SORTER ROLLER
18	59K93761	OUTPUT ROLLER (REP 11A.17) (SEE NOTE 1)
19	--	SPACER
20	7E17020	GEAR (25T)
21	20K92520	TENSION PULLEY
22	--	TRANSPORT MOTOR PWB (P/O ITEM 1)
23	5E80100	PULLEY FLANGE

NOTE 1: Available in Kit see item 16 on PL 14.7B

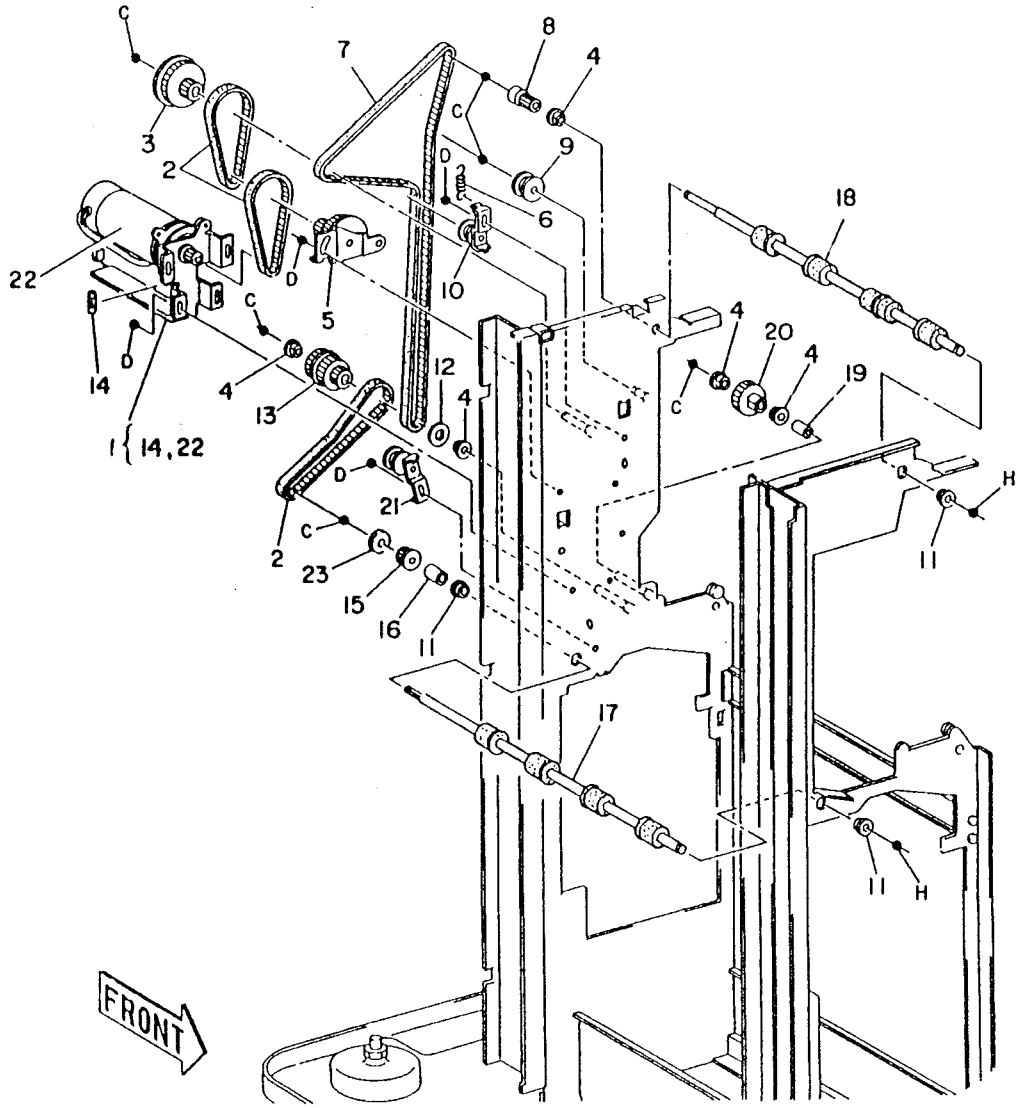

8-8-089-0

PL 14.5 Upper Exit Guide and Latch

Item	Part	Description
1	105E93510	STATIC ELIMINATOR
2	22K25110	PINCH ROLLER (REP 11A.30)
3	--	NON-SORT GUIDE (NOT SPARED)
4	130K94740	NON-SORT SENSOR (Q11-150) (REP 11A.31)
5	3E81940	HANDLE
6	--	BRACKET (NOT SPARED)
7	105K5590	STATIC ELIMINATOR
8	9E33570	LATCH SPRING
9	--	LATCH LINK (NOT SPARED)
10	3E83581	LATCH LEVER (REP 11A.18) (ADJ 11A.4)
11	--	LINK (NOT SPARED)
12	--	LATCH LEVER SHAFT (NOT SPARED)
13	120E93950	DOCKING ACTUATOR
14	9E33500	SPRING
15	--	DOCKING BRACKET (NOT SPARED)
16	110E91200	SORTER INTERLOCK SWITCH (S11-352)
17	110E91210	SORTER INTERLOCK SWITCH (S11-352)
18	121E91380	MAGNET CATCH
19	3E92690	KNOB
20	130K94750	BIN ENTRY SENSOR (Q11-170)
21	38K93050	GUIDE SOLENOID (SOL11-088) (REP 11A.19)
22	--	UPPER EXIT GUIDE (NOT SPARED)
23	--	PLASTISLIP GREASE (SEE ITEM 9 ON PL 16.1)

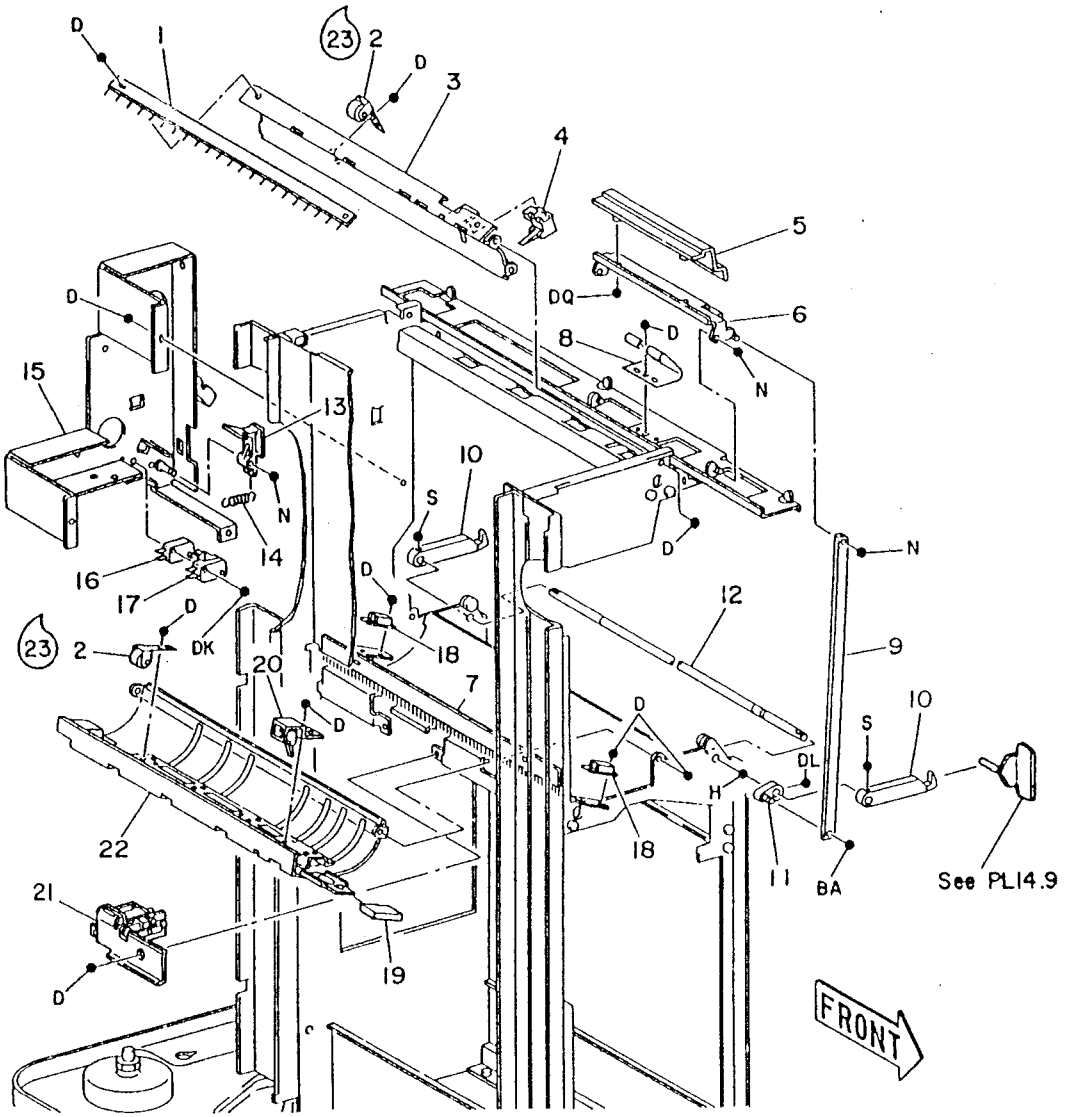

8-8-090-I

PL 14.7A Transport Assembly (1 of 2)

Item	Part	Description
1	54K82571	TRANSPORT ASSEMBLY (REP 11A.29)
2	--	TRANSPORT GUIDE (P/O ITEM 1)
3	59K94890	PINCH ROLLER (REP 11A.30)
4	130K94730	ENTRY SENSOR (Q11-160) (REP 11A.32)
5	9E33530	SPRING
6	22E94310	PINCH ROLLER
7	6E83460	PIN
8	48K9121	RH UPPER COVER
9	26E82580	SCREW (M3X8)
10	413W75959	BEARING
11	121K94620	DIVERTER SOLENOID (SOL11-072) (REP 11A.28)
12	--	MAGNET CATCH
13	--	DIVERTER
14	54K82591	VERTICAL TRANSPORT ASSEMBLY
15	59K93630	PINCH ROLLER (REP 11A.30)
16	--	VERTICAL GUIDE (NOT SPARED)
17	3E92690	KNOB
18	--	UPPER GUIDE (NOT SPARED)
19	--	LOWER GUIDE (NOT SPARED)
20	48E80510	INNER COVER

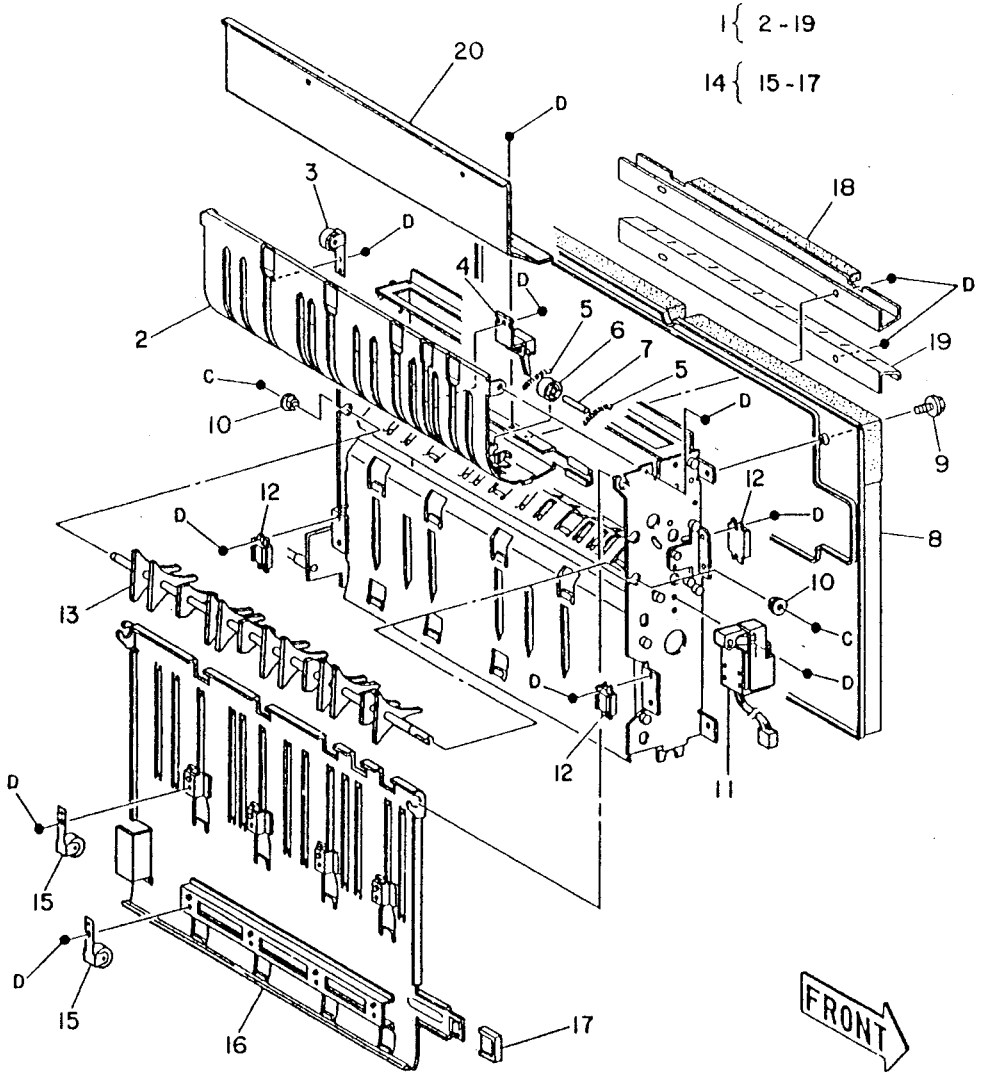

8-8-092-0

PL 14.6 Stapler Assembly

Item	Part	Description
1	92E9891	LABEL
2	68K80201	STAPLER HEAD ASSEMBLY (REP 11A.23)
3	127K80720	STAPLER TRANSPORT MOTOR No.2 (MOT11-090) (REP 11A.21)
4	108E90420	FUSE (125V 2.5A)
5	23E92890	STAPLER TRANSPORT DRIVE BELT
6	22E94280	ROLLER
7	9E80010	SPRING
8	22E94300	ROLLER (ADJ 11A.6)
9	22E94260	GUIDE ROLLER (ADJ 11A.6)
10	7E86690	STAPLER TRANSPORT GEAR
11	1K20241	STAPLER BASE ASSEMBLY
12	127K80600	STAPLER TRANSPORT MOTOR No.1 (MOT11-080) (REP 11A.21)
13	19E94070	UPPER CLAMP (REP 11A.27)
14	9E33520	PLATE SPRING
15	3E81951	LATCH PLATE
16	9E33540	PLATE SPRING
17	--	STAPLER BASE (NOT SPARED)
18	19E94061	LOWER CLAMP (REP 11A.27)
19	130K94610	STAPLING AND NON-STAPLING POSITION SENSOR (Q11-398, Q11-396) (REP 11A.22)
20	29K90190	STAPLER ASSEMBLY
21	--	STAPLER COVER (P/O ITEM 20)
22	--	STAPLER (P/O ITEM 20)
23	130K94620	STAPLER PAPER SENSOR (Q11-394)
24	--	STAPLER BASE BRACKET (P/O ITEM 20)
25	48E94231	STAPLER REAR COVER
26	130K94590	DUAL AND SINGLE STAPLE POSITION SENSORS (Q11-371, Q11-372, Q11-374) (REP 11A.25)
27	130K80020	DUAL STAPLE POSITION 1 SENSOR (Q11-373) (REP 11A.25)
28	130K94600	SINGLE STAPLE POSITION 1 SENSOR (Q11-370) (REP 11A.24)
29	--	RAIL COVER (NOT SPARED)
30	--	STOPPER (NOT SPARED)

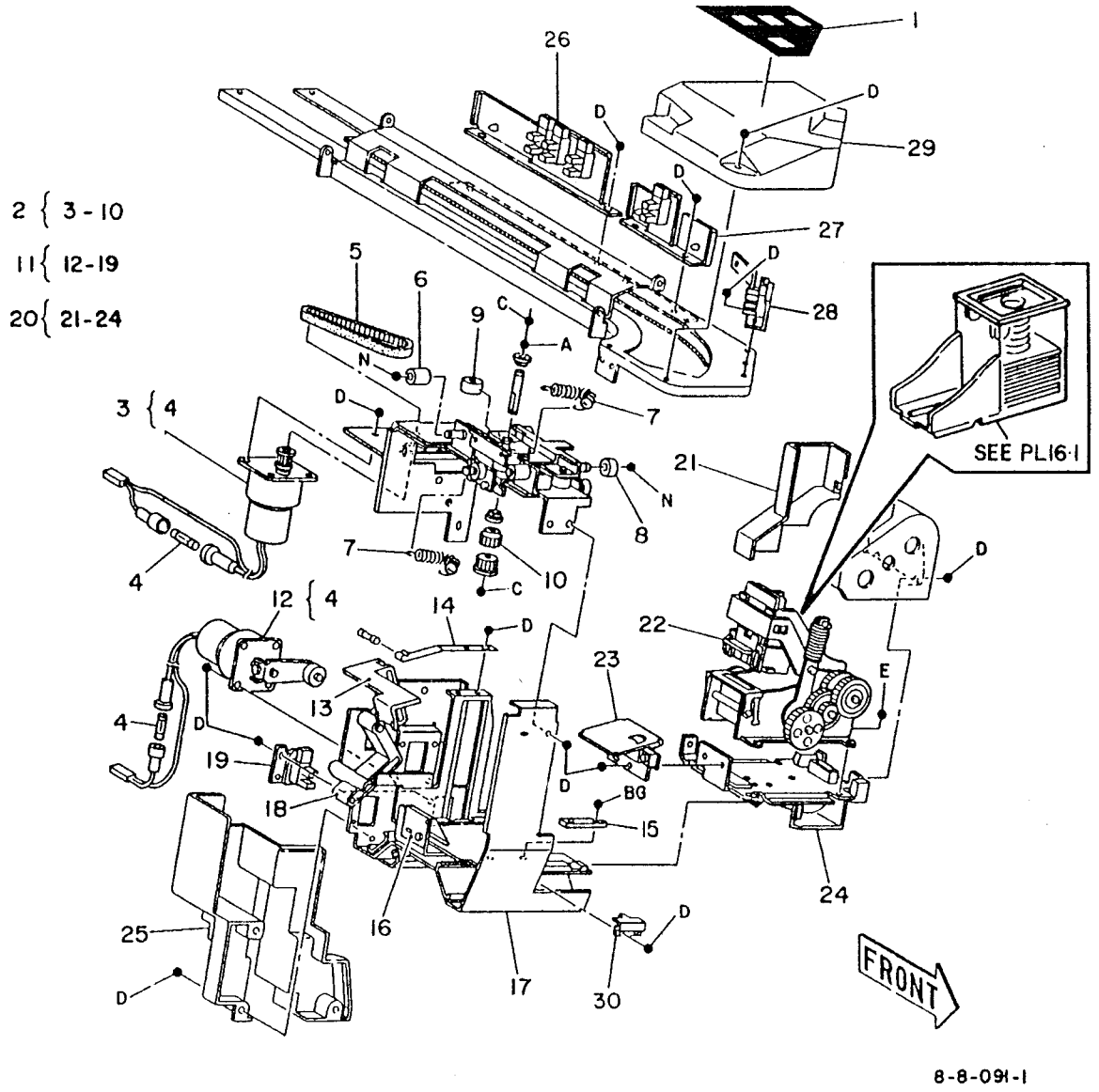

PL 14.7B Transport Assembly (2 of 2)

Item	Part	Description
1	59K94881	TRANSPORT ROLLER
2	59K93611	TRANSPORT ROLLER
3	59K94871	TRANSPORT ROLLER
4	23E92940	UPPER TRANSPORT BELT
5	--	IDLER PULLEY (NOT SPARED)
6	--	PULLEY (P/O ITEM 16)
7	--	SPACER (NOT SPARED)
8	--	BEARING
9	9E36070	SPRING
10	20K91610	TENSION PULLEY
11	23E92930	MIDDLE TRANSPORT BELT
12	--	PULLEY (P/O ITEM 16)
13	23E92920	LOWER TRANSPORT BELT
14	20E93810	PULLEY
15	--	FLANGE PULLEY
16	600K35491	TRANSPORT ROLLER REPAIR KIT

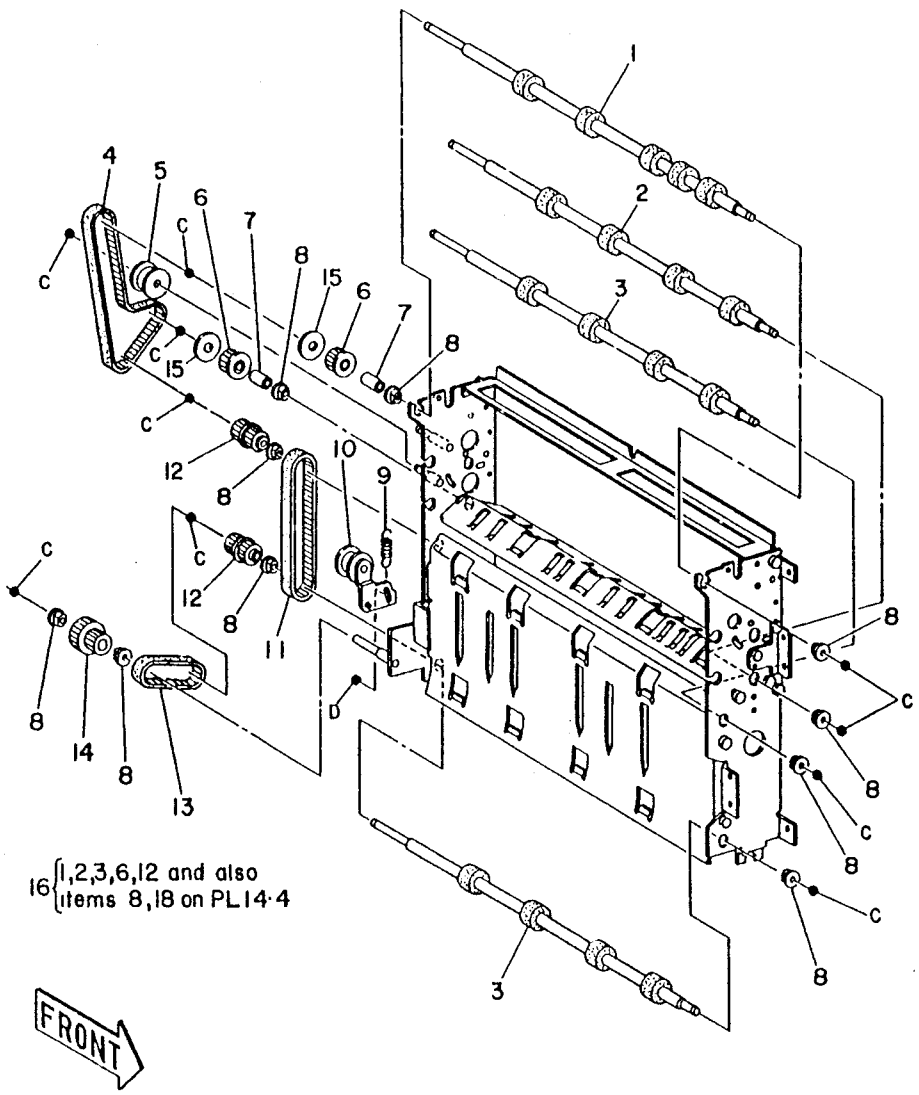

8-8-093-0

PL 14.8 Console and Covers

Item	Part	Description
1	--	TOP COVER ASSEMBLY
2	2K41210	TOP COVER
3	2K38920	CONTROL PANEL
4	91K70070	LABEL
5	91K70080	LABEL
6	91K70050	LABEL
7	91K70060	LABEL
8	50E92641	OUTPUT TRAY
9	--	REAR COVER (NOT SPARED)
10	26E82580	SCREW
11	26E93560	THUMB SCREW
12	68K80040	DOOR INTERLOCK SWITCH (S11-354)
13	--	RH LOWER COVER (NOT SPARED)
14	--	FRONT DOOR (P/O ITEM 30)
15	92E9900	LABEL
16	--	MAGNET (NOT SPARED)
17	2K41200	LH COVER ASSEMBLY
18	110E91120	BIN COVER INTERLOCK SWITCH (S11-356)
19	110E91210	BIN COVER INTERLOCK SWITCH (S11-356)
20	26E82620	SCREW
21	2K38841	BIN DOOR
22	29E92260	NYLON RIVET
23	120E92961	SAFETY ACTUATOR
24	2K41234	BIN COVER
25	92E12370	LABEL (INSTRUCTION)
26	93P60081	SPANNER
27	31K91391	ARM
28	--	SCREWDRIVER
29	26E83010	SCREW
30	48K3500	FRONT DOOR ASSEMBLY (INC. INNER COVER)
31	--	RUBBER SPACER
32	--	SPARE STAPLES HOLDER (NOT SPARED)

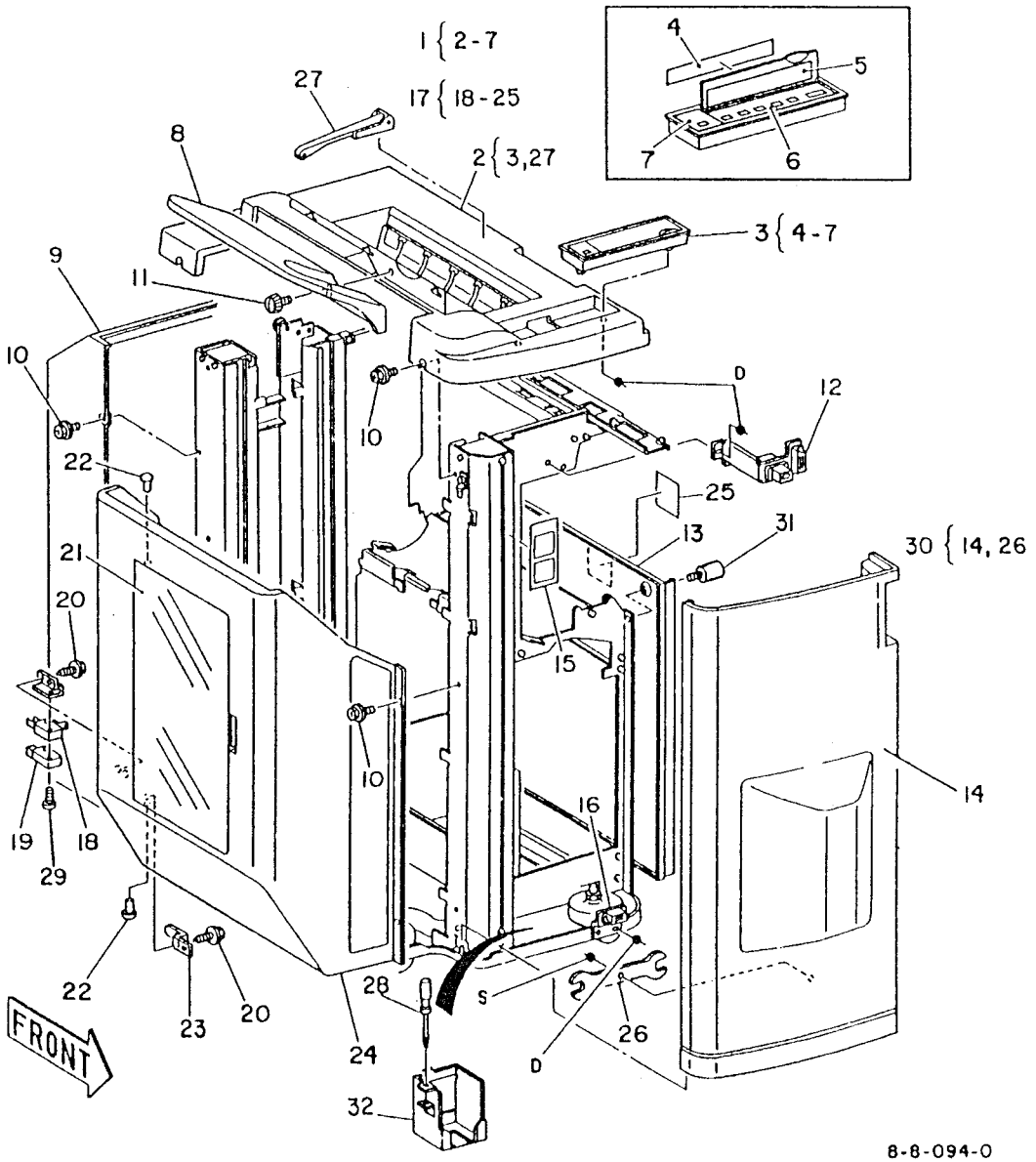

PL 14.9 Rail Assembly

Item	Part	Description
1	92E9910	LABEL
2	92E9920	LABEL
3	30K89920	ACTUATOR
4	15K84320	RAIL ASSEMBLY
5	26E25550	SCREW (WITH TAG 956)
6	--	SORTER DOCKING KIT
7	--	REAR LATCH PLATE (NOT SPARED)
8	--	FRONT LATCH PLATE (NOT SPARED)

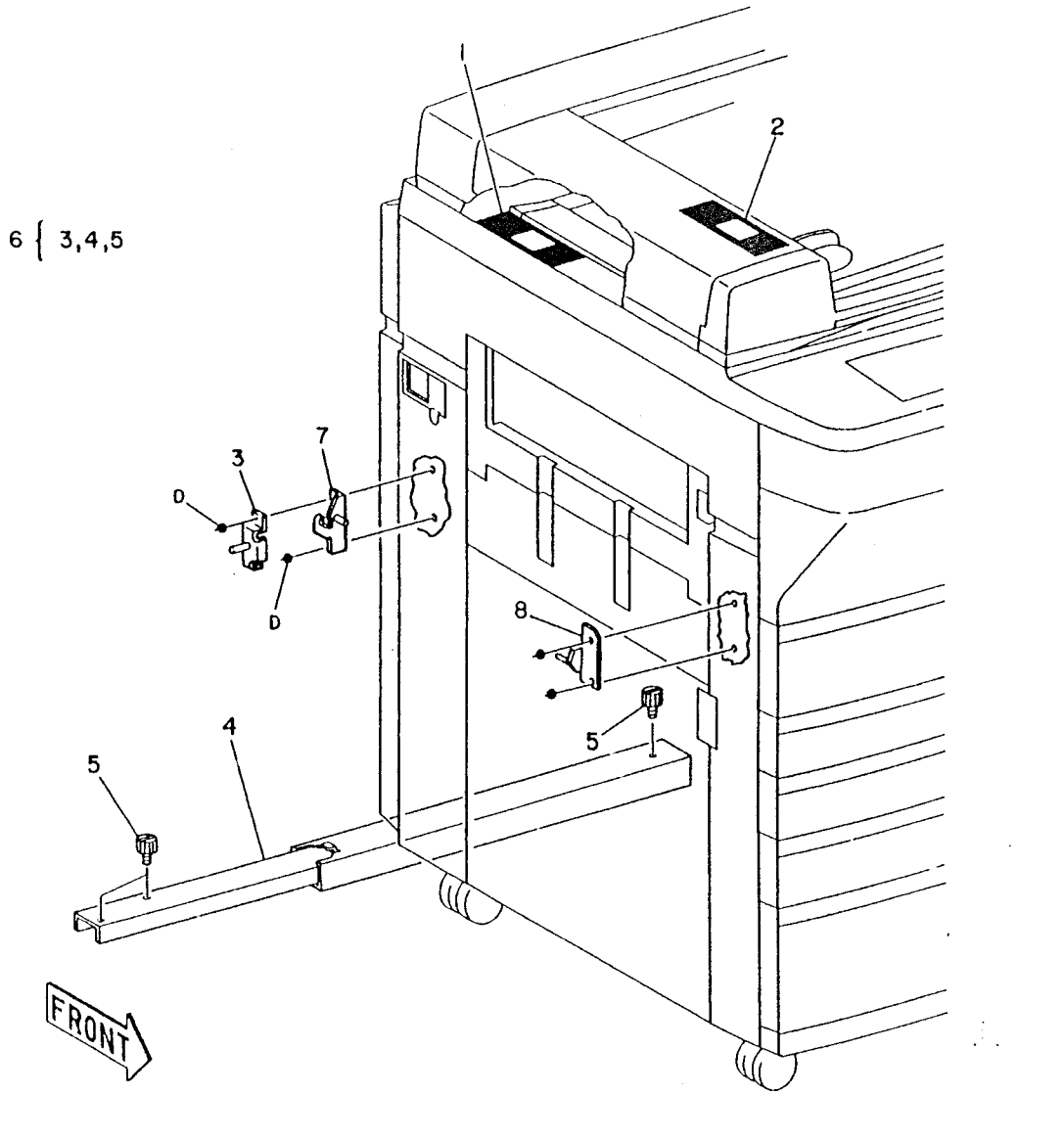

8-8-095-0

PL 15.1 Maintenance Installation/ Removal Kits

Item	Part	Description
1	73K77526	BASIC INSTALLATION KIT (RX/AOS)
-	73K77533	BASIC INSTALLATION KIT (USO)
-	73K77543	BASIC INSTALLATION KIT (XCI)
2	73K80436	SUPPLEMENTARY/ INSTALLATION KIT (USCO/XCL)
3	98K15444	EDIT PAD ENABLEMENT KIT (WITH TAG 242)
4	98K19911	HCF CONVERSION KIT
5	73S16700	NATIONALISATION KIT (ENGLISH)
-	73S16701	NATIONALISATION KIT (FRENCH)
-	73S16702	NATIONALISATION KIT (DUTCH)
-	73S16703	NATIONALISATION KIT (SWEDISH)
-	73S16704	NATIONALISATION KIT (FINNISH)
-	73S16705	NATIONALISATION KIT (DANISH)
-	73S16706	NATIONALISATION KIT (NORWEGIAN)
-	73S16707	NATIONALISATION KIT (GERMAN)
-	73S16708	NATIONALISATION KIT (ITALIAN)
-	73S16709	NATIONALISATION KIT (SPANISH/LATIN)
-	73S16710	NATIONALISATION KIT (PORTUGUESE)
-	73S16711	NATIONALISATION KIT (GREEK)
-	73S16712	NATIONALISATION KIT (BELGIUM)
-	73S16713	NATIONALISATION KIT (AUSTRIAN)
-	73S16715	NATIONALISATION KIT (SWISS)
-	73S16716	NATIONALISATION KIT (GENERIC)
6	600K40170	INSTALLATION TRANSIT CLAMP KIT
7	600K23140	CONSUMABLES CATALOGUE (SWEDISH)
8	600K23150	CUSTOMER ENVELOPE PACK (DANISH)
9	600K23160	CUSTOMER ENVELOPE PACK (ITALIAN)
10	600K34530	NATIONALISATION PACK (ENGLISH)
11	600K37090	CUSTOMER INFORMATION PACK (FRENCH)
12	73K64970	EDIT PAD INSTALLATION KIT (ENGLISH)
13	98K12463	DOCUMENT COVER INSTALLATION KIT
14	98K16250	WORK ORGANISER INSTALLATION KIT
15	98K18243	MANUAL STAPLER INSTALLATION KIT (WITH TAG 901)
16	98K12472	OUTPUT TRAY INSTALLATION KIT
17	98K18211	TRAY 2 AND 3 CASSETTE INSTALLATION KIT

PL 16.1 Consumables and Special Tools

Item	Part	Description
1	600S4372	CLEANING PADS KIT (QTY.10)
2	8R90019	CLEANING PAD (QTY.1)
3	8R90273	ANTI STATIC FLUID
4	8R90176	GENERAL CLEANING SOLVENT (RX)
5	43P45	FILM REMOVER (MIRRORS, LENS CLEANING) (USCO)
6	43P48	FORMULA A (ALL PURPOSE CLEANER)
7	43P89	SOLVENT CLEANING PAD (FUSER ROLL, PRESSURE ROLL CLEANING) (USCO)
-	43P83	SOLVENT CLEANING PAD (FUSER ROLL, PRESSURE ROLL CLEANING) (RX)
8	600T91836	DADF CLEANING CLOTH
9	600T91831	PLASTISLIP GREASE (USCO/XCL)
-	600T91835	PLASTISLIP GREASE (RX)
10	600T91829	5.5MM AF MAGNET NUT DRIVER
11	600T91823	FLEXABLE MAGNET PICK-UP
12	600T91830	MOLEX MINI-FIT JUNIOR TOOL
13	600T40210	MT6/7 MOLEX MINI-FIT JUNIOR TOOL
14	600T41210	STUBBY SCREWDRIVER
15	82E7370	COLOUR SOLID AREA DENSITY BACKGROUND SCALE TEST PATTERN
16	82P448	BACKGROUND/LOW DENSITY TEST PATTERN
17	82E8230	SOLID AREA DENSITY TEST PATTERN (VISUAL SCALE)
18	600T1915	1.5MM STEPPED PROBES (PAIR)
19	600T1653	HIGH VOLTAGE PROBE
20	8R90139	DUSTING POUCH
21	117K16880	HCF DOOR CHEAT (MT6 CONNECTOR 2 WAY)
22	70P43	MOLUB GREASE 777
23	70P95	LUBRICANT OIL
24	70H23	LUBRICANT
25	8R3814	STAPLES (PACK OF 5) (SORTER/AUTO STAPLER)
26	8R1296	STAPLES (PACK OF 5) (MANUAL STAPLER) (RX/XLA) (WITH TAG 901)
-	8R2253	STAPLES (PACK OF 5) (MANUAL STAPLER) (USCO/XCL) (WITH TAG 901)

PL 17.1 HCF Label set

Item	Part	Description
1	91K8280	HCF LABEL SET
2	--	TRAY 5 CONTROL PANEL LABEL (P/O ITEM 1)
3	--	HCF JAM CLEARANCE LABEL (P/O ITEM 1)
4	--	HCF TRAY 5 LABEL (P/O ITEM 1)
5	--	HCF PAPER LOADING LABEL (P/O ITEM 1)
6	--	TRANSPARENCY LOADING LABEL (TRAY 5) (P/O ITEM 1)
7	--	HCF CORNER REGISTRATION ARROW LABEL (P/O ITEM 1)
8	91K8230	CONTROL PANEL LABEL SET (XLA) (WITH TAG 8)
-	91K7703	CONTROL PANEL LABEL SET (XLA) (WITHOUT TAG 8)
-	91K8260	CONTROL PANEL LABEL SET (XCL) (WITH TAG 8)
-	91K7364	CONTROL PANEL LABEL SET (XCL) (WITHOUT TAG 8)
-	91K8240	CONTROL PANEL LABEL SET (RX) (WITH TAG 8)
-	91K7355	CONTROL PANEL LABEL SET (RX) (WITHOUT TAG 8)
-	91K8250	CONTROL PANEL LABEL SET (USCO) (WITH TAG 8)
-	91K7345	CONTROL PANEL LABEL SET (USCO) (WITHOUT TAG 8)
9	--	OUTPUT OPTION LABEL SET (RX/XCL) (P/O ITEM 1 ON PL 15.1)
-	--	OUTPUT OPTION LABEL SET (USCO) (P/O ITEM 1 ON PL 15.1)

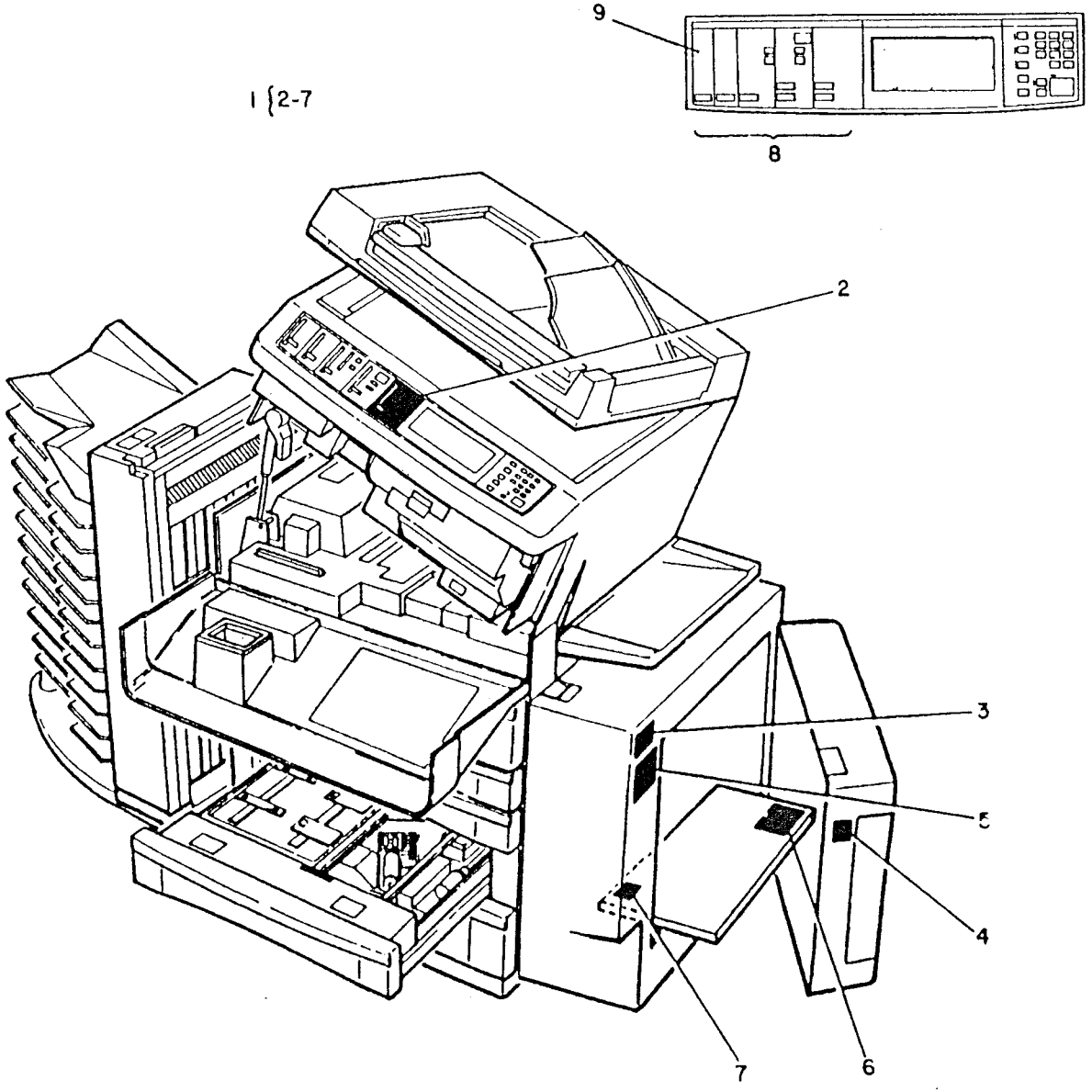

8-8-110-1

PL 17.2B Processor Label set

Item	Part	Description
1	91K8150	CAUTION FUSER (LH SIDE) LABEL (LANGUAGE FREE)
2	91K8130	CAUTION FUSER (TOP/SIDE) LABEL (LANGUAGE FREE)
3	--	MAX LINE (PAPER TRAY BY-PASS) LABEL (P/O ITEM 1 ON PL 17.2A)
4	--	PAPER TRAY BYPASS (INSTRUCTION) LABEL (NON-HCF) (P/O ITEM 1 ON PL 17.2A)
-	--	PAPER TRAY BYPASS (INSTRUCTION) LABEL (HCF) (P/O ITEM 1 ON PL 17.2A)
5	--	JAM CLEARANCE (DUPLEX TRAY) LABEL (P/O ITEM 1 ON 17.2A)
6	--	INSTRUCTION 2 (DUPLEX TRAY) LABEL (P/O ITEM 1 ON PL 17.2A)
7	--	JAM CLEARANCE (DUPLEX TRAY) LABEL (P/O ITEM 1 ON PL 17.2A)
8	--	INSTRUCTION 1 (DUPLEX TRAY) LABEL (P/O ITEM 1 ON PL 17.2A)
9	--	ESD WARNING LABEL (P/O ITEM 1 ON PL 17.2A)

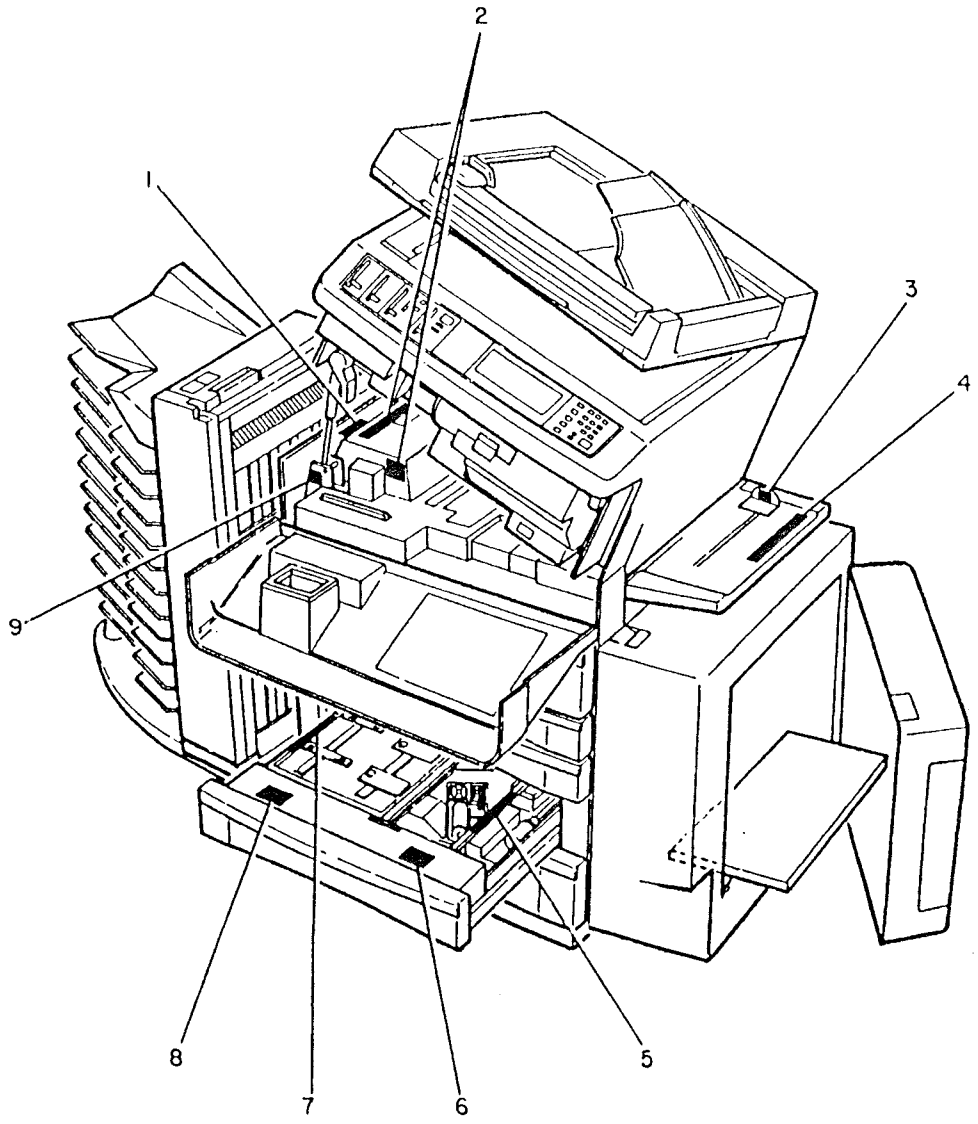

8-8-126-0

PL 17.2A Processor Label set

Item	Part	Description
1	91K7325	LABEL SET (PROCESSOR)
2	--	ALIGNMENT ARROW (PROCESSOR) LABEL (P/O ITEM 1)
3	--	BOOK MODE LABEL (P/O ITEM 1)
4	--	XEROX LABEL (P/O ITEM 1)
5	--	ON-OFF SWITCH LABEL (NON-HCF) (P/O ITEM 1)
.	--	ON/OFF SWITCH LABEL (HCF) (P/O ITEM 1)
6	--	ALIGNMENT ARROW (TONER CARTRIDGE) LABEL (P/O ITEM 1)
7	--	HCF JAM CLEARANCE LABEL LABEL (P/O ITEM 1)
8	--	HCF (TRAY 4) LABEL (P/O ITEM 1)
9	--	HCF PAPER LOADING LABEL (P/O ITEM 1)
10	--	HCF CORNER REGISTRATION ARROW (P/O ITEM 1)
11	--	TONER LOADING INSTRUCTION (P/O ITEM 1)
12	--	MAX LINE PAPER TRAY (250/550/TRAY 4) LABEL (P/O ITEM 1)
13	--	PAPER LOADING (250) (TRAY2/3) LABEL (P/O ITEM 1)
14	--	PAPER LOADING (1000) (TRAY 4) LABEL (P/O ITEM 1)
.	--	PAPER LOADING (550) (TRAY 1) LABEL (P/O ITEM 1)
15	--	FRONT REGISTRATION ARROW (550) (TRAY 4) LABEL (P/O ITEM 1)
16	--	SIZE INDICATOR (2/3 TRAY) LABEL (P/O ITEM 1)

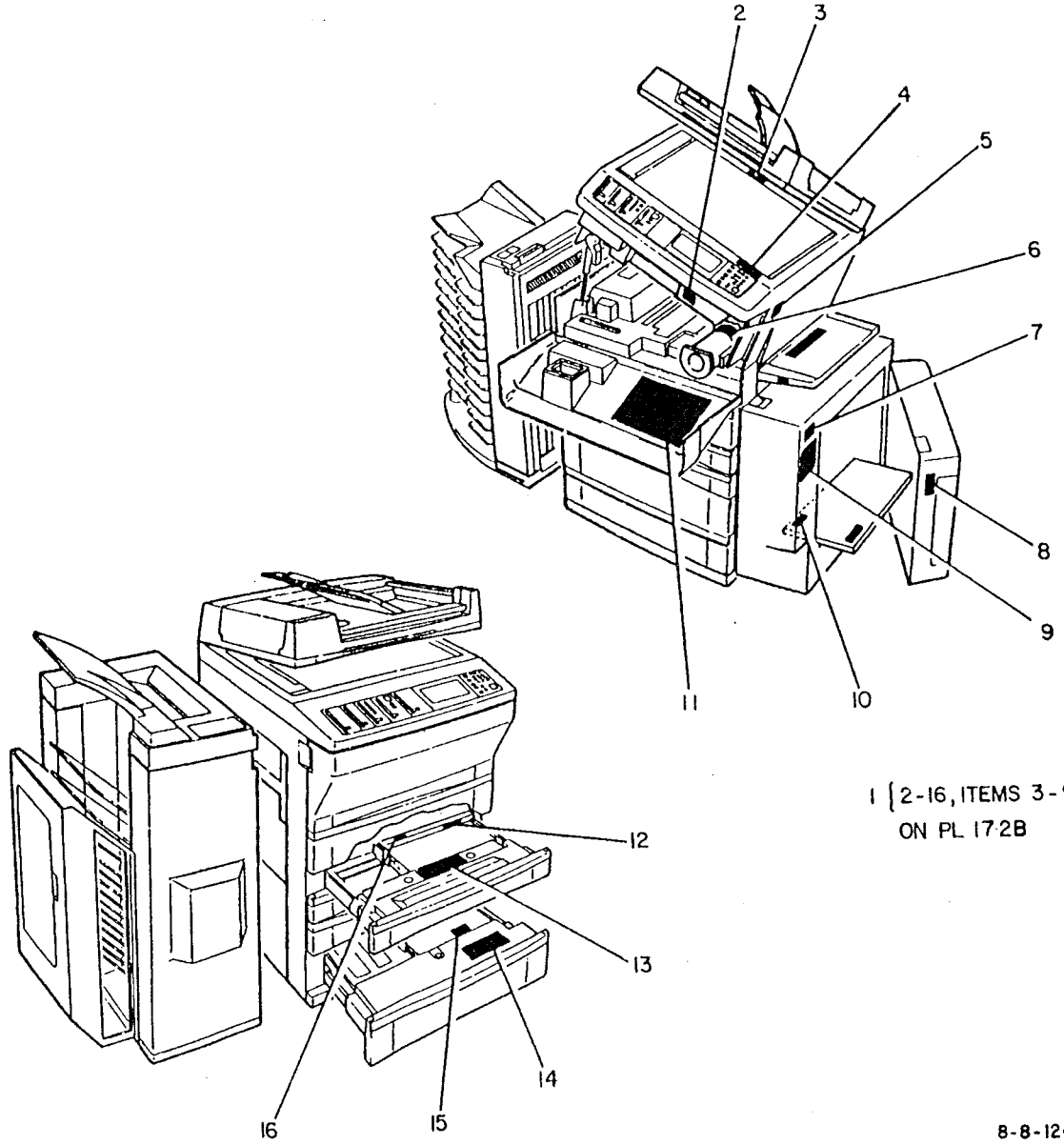

1 [2-16, ITEMS 3-9 ON PL 17.2B

8-8-124-1

PL 17.3 Cassette size Tray Label set

Item	Part	Description
1	91K7690	GENERAL CASSETTE SIZE LABEL SET
1A	91K7860	TRAY SIZE LABEL SET (RX/XLA)
-	91K7881	TRAY SIZE LABEL SET (USCO/XCL)
2	91K7870	GENERAL CASSETTE INTRUCTION LABEL SET
3	--	TRANSPARENCY LOADING (250/550/TRAY 4) LABEL (P/O ITEM 2)
4	--	MAX LINE (250/550/TRAY 4) LABEL (P/O ITEM 2)
5	--	SIZE INDICATOR ARROW (2/3 TRAY) LABEL (P/O ITEM 2)

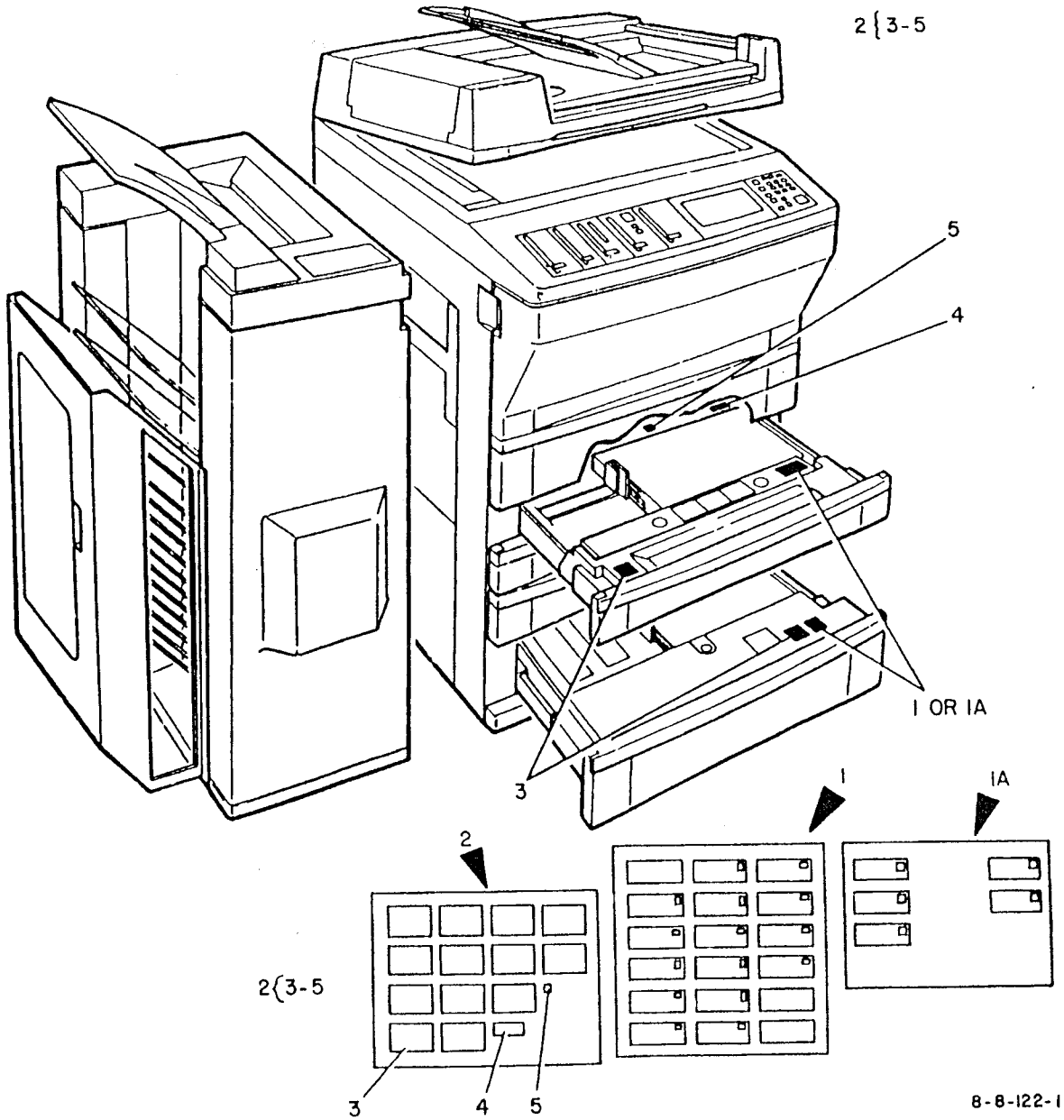

PL 17.4 DADF and Paper Bypass Tray Label set

Item	Part	Description
1	91K7374	LABEL SET (USCO)
-	91K8121	LABEL SET (XCL)
-	91K7393	LABEL SET (RX/XLA)
2	--	DADF PAPER SIZE GUIDE LABEL (P/O ITEM 1)
3	--	DADF INSTRUCTION LABEL (P/O ITEM 1)
4	--	ARROW SIZE AND GUIDE LABEL (NON-HCF) (P/O ITEM 1)
-	--	ARROW SIZE AND GUIDE LABEL (HCF) (P/O ITEM 1)
5	--	PAPER BYPASS TRAY (HANDLE) LABEL (NON-HCF) (P/O ITEM 1)
6	--	PAPER BYPASS TRAY (IDENTITY) LABEL (HCF) (P/O ITEM 1)

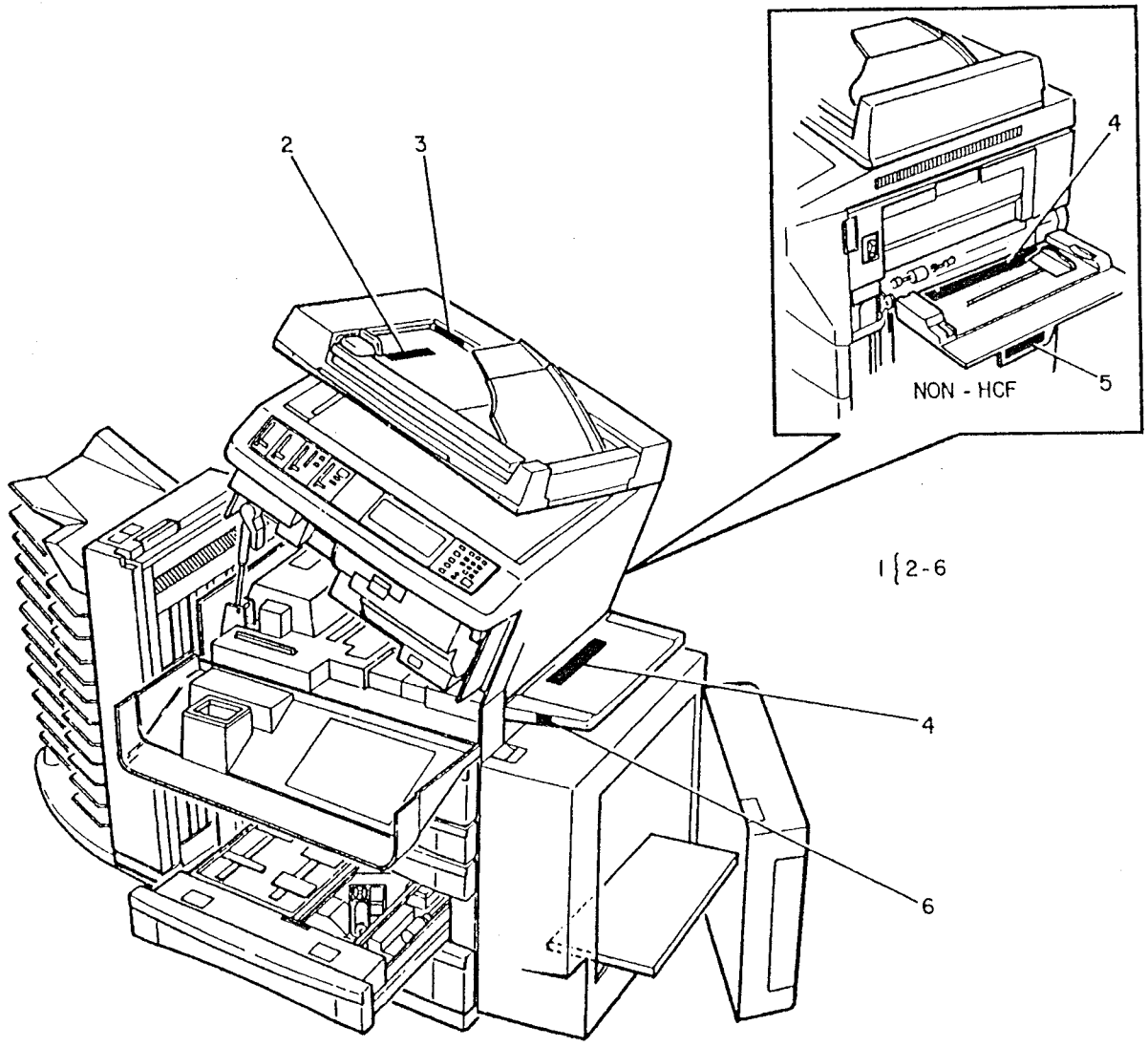

8-8-121-0

PL 17.5 Edit Pad Label set

Item	Part	Description
1	91K8160	EDIT PAD LABEL SET
2	--	EDIT CONTROL PANEL (P/O ITEM 1)
3	--	EDIT PAD OVERLAY LABEL (P/O ITEM 1)
4	--	EDIT PAD LOCATION LABEL (P/O ITEM 1)

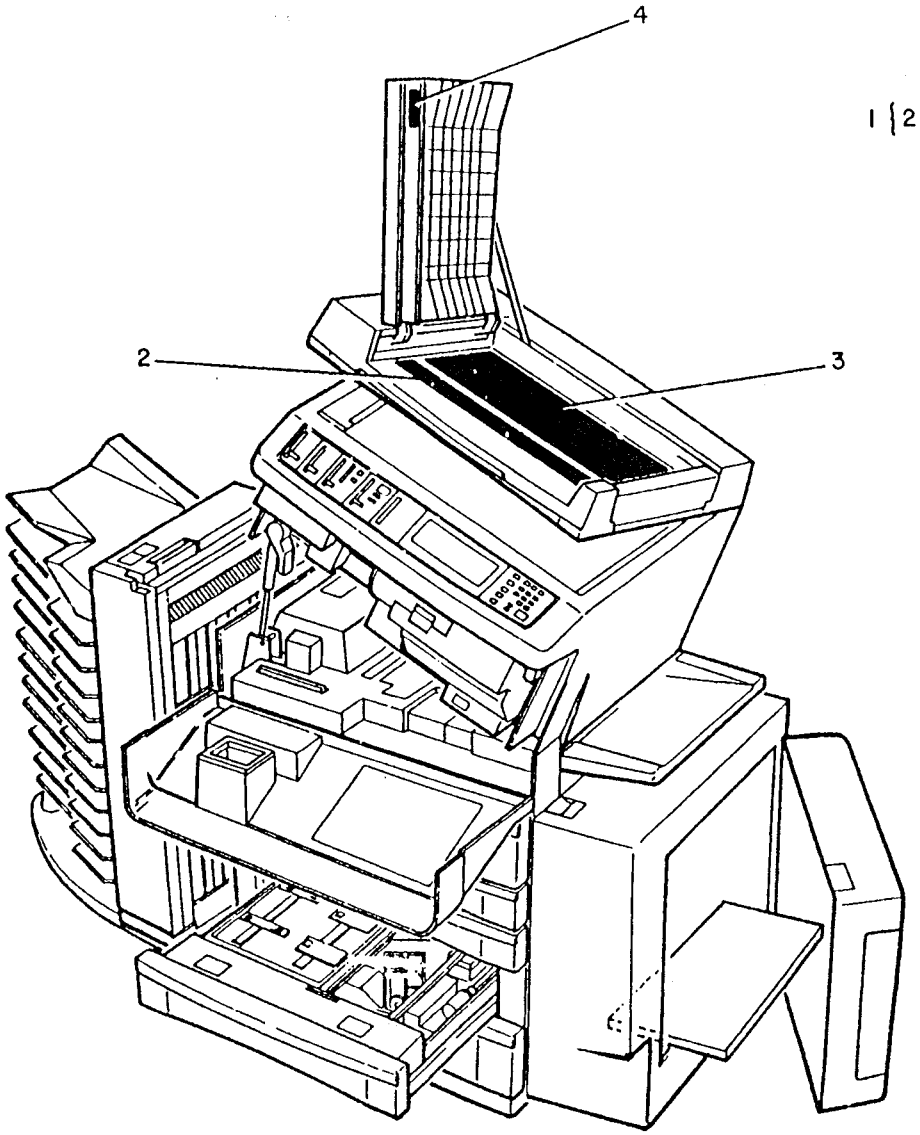

1 | 2-4

8-8-123-0

PL 17.6A Sorter/Sorter Stapler Label set (1 of 2)

Item	Part	Description
1	91K7551	SORTER/SORTER STAPLER LABEL SET
2	--	JAM CLEARANCE LABEL (P/O ITEM 1)
3	--	STAPLE LOADING LABEL (P/O ITEM 1)
4	--	OUTPUT PANEL COVER LABEL (P/O ITEM 1)
5	92E70071	INSTRUCTION LABEL
6	--	SORTER/PROCCESSOR JAM CLEARANCE (P/O ITEM 1)
7	--	FRONT PANEL BANNER LABEL (P/O ITEM 10)
8	--	SORTER/STAPLE INSTRUCTION LABEL (P/O ITEM 10)
9	--	TRANSPARENCY LOADING (250/550/TRAY 4/HCF) (P/O ITEM 10)
10	--	SORTER/SORTER STAPLER LABEL SET (LANGUAGE) (SEE NOTE 1)

NOTE 1: (Item 10) Refer to PL 17.6B for the foreign language equalivant for these labels.

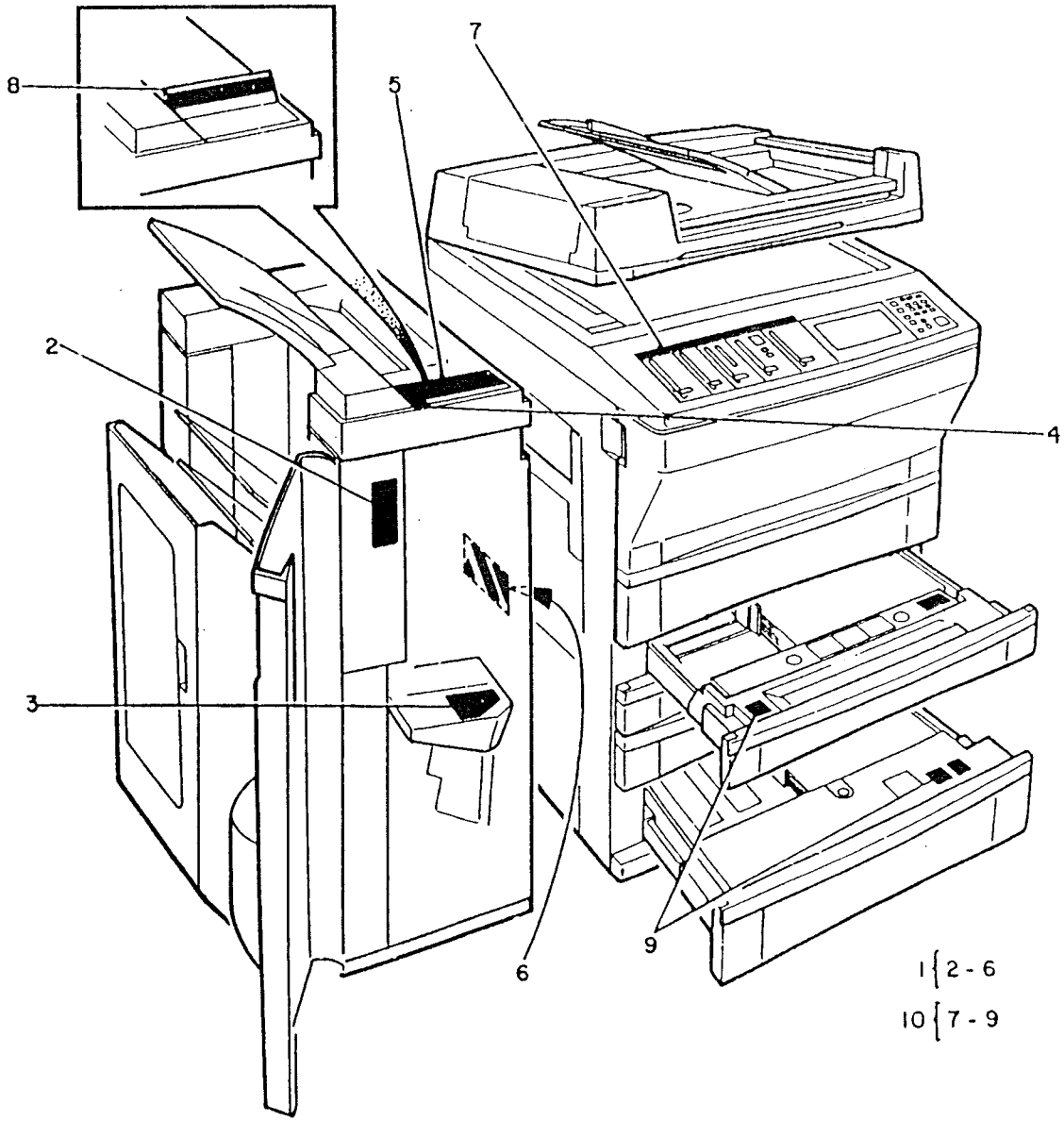

8-8-128-0

PL 18.1A Terminal and Socket Kits

Item	Part	Description
1	600K38010	AMP EI TERMINAL REPAIR KIT
1A	--	MALE SOCKET (20-26 AWG) (P/O ITEM 1) (QTY.20)
1B	--	FEMALE PIN (P/O ITEM 1) (QTY.20)
2	600K38000	JST SMP MALE/FEMALE TERMINAL REPAIR KIT
2A	--	MALE CRIMP SOCKET (P/O ITEM 2) (QTY.20)
2B	--	FEMALE PIN (P/O ITEM 1) (QTY.20)
3	600K37950	MOLEX 3191 TERMINAL REPAIR KIT
3A	--	MALE SOCKET (P/O ITEM 3) (QTY.20) (20-28 AWG)
3B	--	FEMALE PIN (P/O ITEM 3) (QTY.20) (18-22 AWG)
4	600K37981	JAE MALE/FEMALE TERMINAL REPAIR KIT
4A	--	FEMALE TERMINAL (QTY.20) (P/O ITEM 4) (20-22AWG)
4B	--	FEMALE TERMINAL (QTY.20) (P/O ITEM 4) (24-28 AWG)
4C	--	MALE TERMINAL (QTY.20) (P/O ITEM 4) (20-22 AWG)
4D	--	MALE TERMINAL (QTY.20) (P/O ITEM 4) (24-28 AWG)

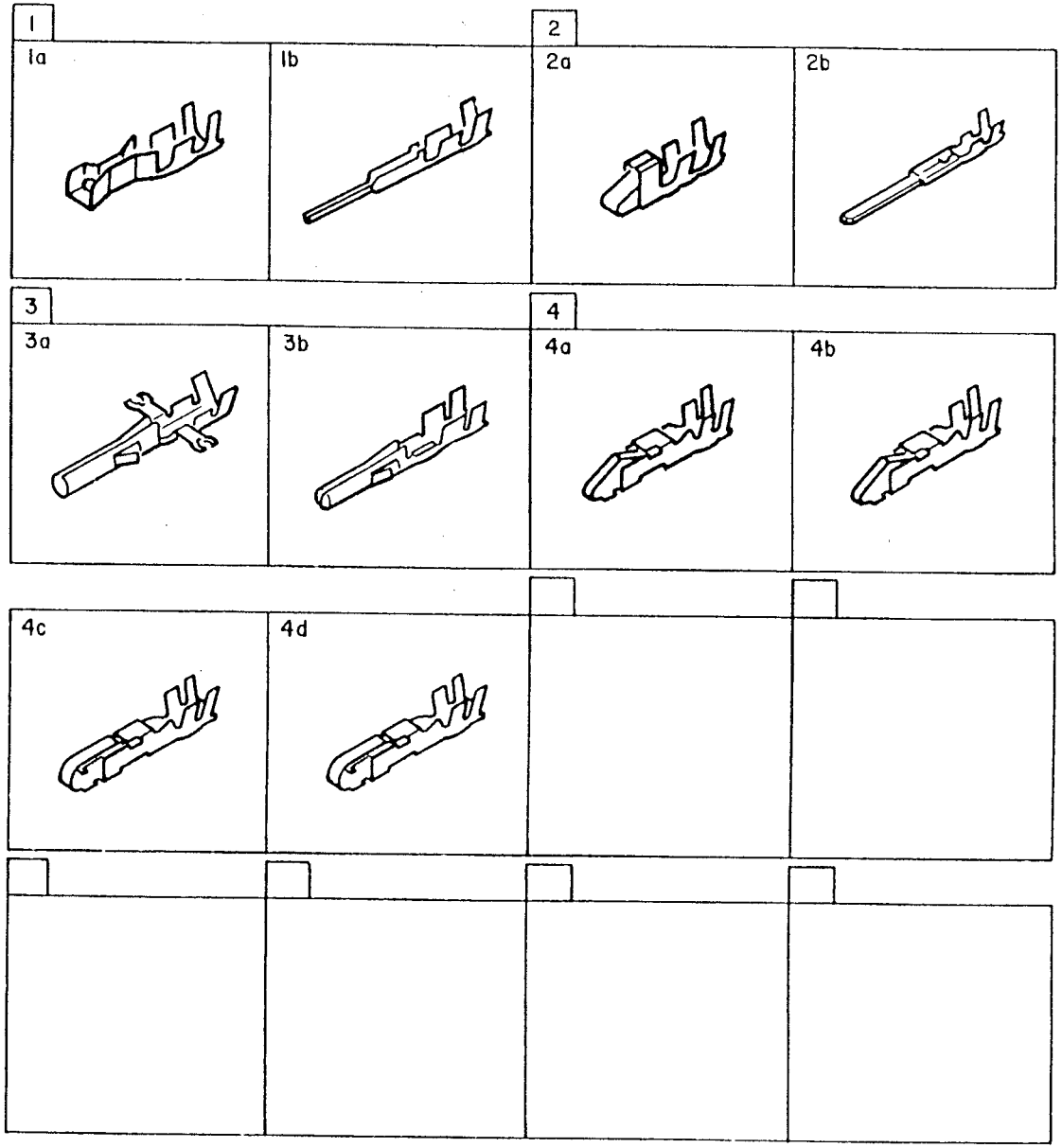

8-8-107-0

PL 17.6B Sorter/Sorter Stapler Label set (2 of 2)

Item	Part	Description
1	92S13214	SORTER/SORTER STAPLER LABEL SET (ENGLISH)
2	92S13215	SORTER/SORTER STAPLER LABEL SET (FRENCH)
3	92S13216	SORTER/SORTER STAPLER LABEL SET (DUTCH)
4	92S13217	SORTER/SORTER STAPLER LABEL SET (SWEDISH)
5	92S13218	SORTER/SORTER STAPLER LABEL SET (FINNISH)
6	92S13219	SORTER/SORTER STAPLER LABEL SET (DANISH)
7	92S13220	SORTER/SORTER STAPLER LABEL SET (NORWEGIAN)
8	92S13221	SORTER/SORTER STAPLER LABEL SET (GERMAN)
9	92S13222	SORTER/SORTER STAPLER LABEL SET (ITALIAN)
10	92S13223	SORTER/SORTER STAPLER LABEL SET (SPANISH)
11	92S13224	SORTER/SORTER STAPLER LABEL SET (PORTUGUESE)
12	92S13225	SORTER/SORTER STAPLER LABEL SET (GREEK)
13	92S13226	SORTER/SORTER STAPLER LABEL SET (USCO)
14	92S13227	SORTER/SORTER STAPLER LABEL SET (XCL)

PL 18.1B Terminal and Socket Kits

Item	Part	Description
1	600K37960	AMP DRAWER (FUSER) TERMINAL REPAIR KIT
1A	--	CRIMP TERMINAL (P/O ITEM 1) (QTY.20)
1B	--	FEMALE CRIMP TERMINAL (P/O ITEM 1) (QTY.20)
1C	--	MALE CRIMP TERMINAL (P/O ITEM 1) (QTY.20)
2	600K37970	MALE/FEMALE HIROSE DFIB TERMINAL REPAIR KIT
2A	--	SMALL MALE SOCKET (20-22 AWG) (P/O ITEM 2) (QTY.20)
2B	--	LARGE MALE SOCKET (24-28 AWG) (P/O ITEM 2) (QTY.20)
2C	--	SMALL FEMALE PIN (20-22 AWG) (P/O ITEM 2) (QTY.20)
2D	--	LARGE FEMALE PIN (24-28 AWG) (P/O ITEM 2) (QTY.20)
3	600K37990	MALE/FEMALE TRAY CONNECTORS AND TERMINAL REPAIR KIT
3A	--	SMALL MALE TERMINAL (20-22 AWG) (P/O ITEM 3) (QTY.20)
3B	--	LARGE MALE TERMINAL (24-28 AWG) (P/O ITEM 3) (QTY.20)
3C	--	SMALL FEMALE TERMINAL (20-22 AWG) (P/O ITEM 3) (QTY.20)
3D	--	LARGE FEMALE TERMINAL (24-28 AWG) (P/O ITEM 3) (QTY.20)

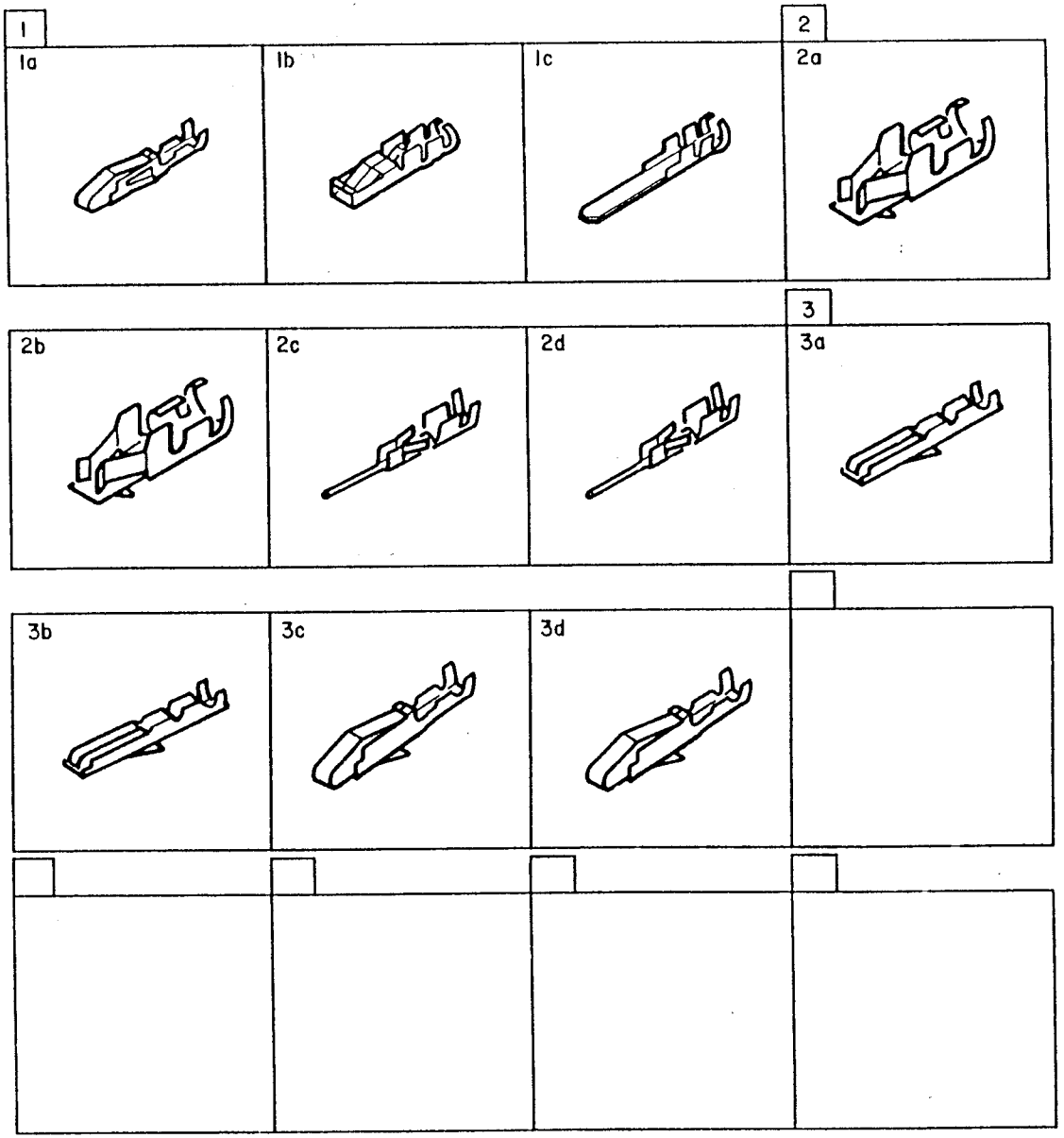

8-8-118-0

PL 18.2 Harness Repair Kits

Item	Part	Description
1	600K37891	HARNESS/CONTACT, HIROSE DF1B REPAIR KIT
1A	--	RED WIRE (24 AWG) (P/O ITEM 1) (QTY.20)
2	600K37901	HARNESS/CONTACT,AMP CT REPAIR KIT
2A	--	RED WIRE (24 AWG) (P/O ITEM 2) (QTY.20)
3	600K37911	HARNESS/CONTACT, HIROSE DF11 REPAIR KIT
3A	--	RED WIRE (24 AWG) (P/O ITEM 3) (QTY.20)
4	600K37921	HARNESS/CONTACT, JAE MICRO REPAIR KIT
4A	--	RED WIRE (24 AWG) (P/O ITEM 4) (QTY.20)
5	600K37931	HARNESS/CONTACT, JST EHR6 REPAIR KIT
5A	--	RED WIRE (24 AWG) (P/O ITEM 5) (QTY.20)
6	600K18711	HARNESS/CRIMP SOCKET MOLEX SL MALE REPAIR KIT
6A	--	PINK WIRE (24 AWG) (P/O ITEM 6) (QTY.10)
6B	--	CONNECTOR SPLICING BLOCK (22-24 AWG) (P/O ITEM 5) (QTY.20)
7	600K18720	HARNESS/CRIMP PIN MOLEX SL FEMALE REPAIR KIT
7A	--	PINK WIRE (24 AWG) (P/O ITEM 7) (QTY.10)
7B	--	CONNECTOR SPLICING BLOCK (22-24 AWG) (P/O ITEM 7) (QTY.20)

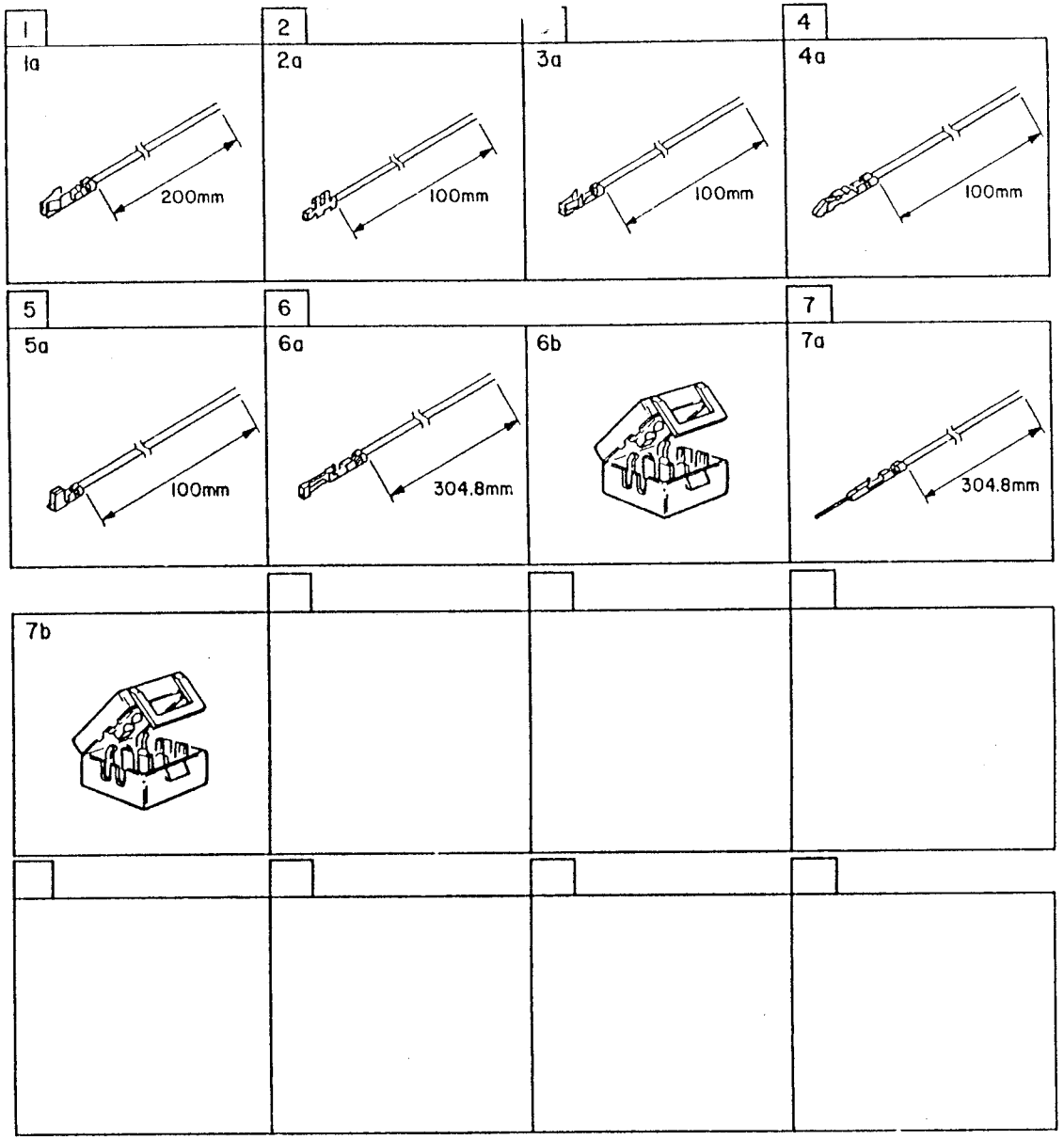

8-8-113-0

PL 18.3 Wire Saddle, Clamp Kits and Splicing Block

Item	Part	Description
1	600K37940	ELECTRICAL SADDLE/ CLAMP REPAIR KIT
1A	--	CLAMP (QTY.5) (P/O ITEM 1)
1B	--	PUSH MOUNT TIE (134MM L) (QTY.10) (P/O ITEM 1)
1C	--	CLAMP (QTY.5) (P/O ITEM 1)
1D	--	WIRE CLAMP (QTY.5) (P/O ITEM 1)
1E	--	CLAMP (QTY.5) (P/O ITEM 1)
1F	--	CLAMP (QTY.5) (P/O ITEM 1)
1G	--	CLAMP (QTY.5) (P/O ITEM 1)
1H	--	WIRE SADDLE (35MM) (QTY.5) (P/O ITEM 1)
-	120P68101	WIRE SADDLE (13MM)
-	120P68102	WIRE SADDLE (18.2MM)
2	913W1195	WIRE SADDLE (BLACK)
3	113P1701	CONNECTOR SPLICING BLOCK (22-24 AWG)
4	120P60869	WIRE SADDLE (8MM)

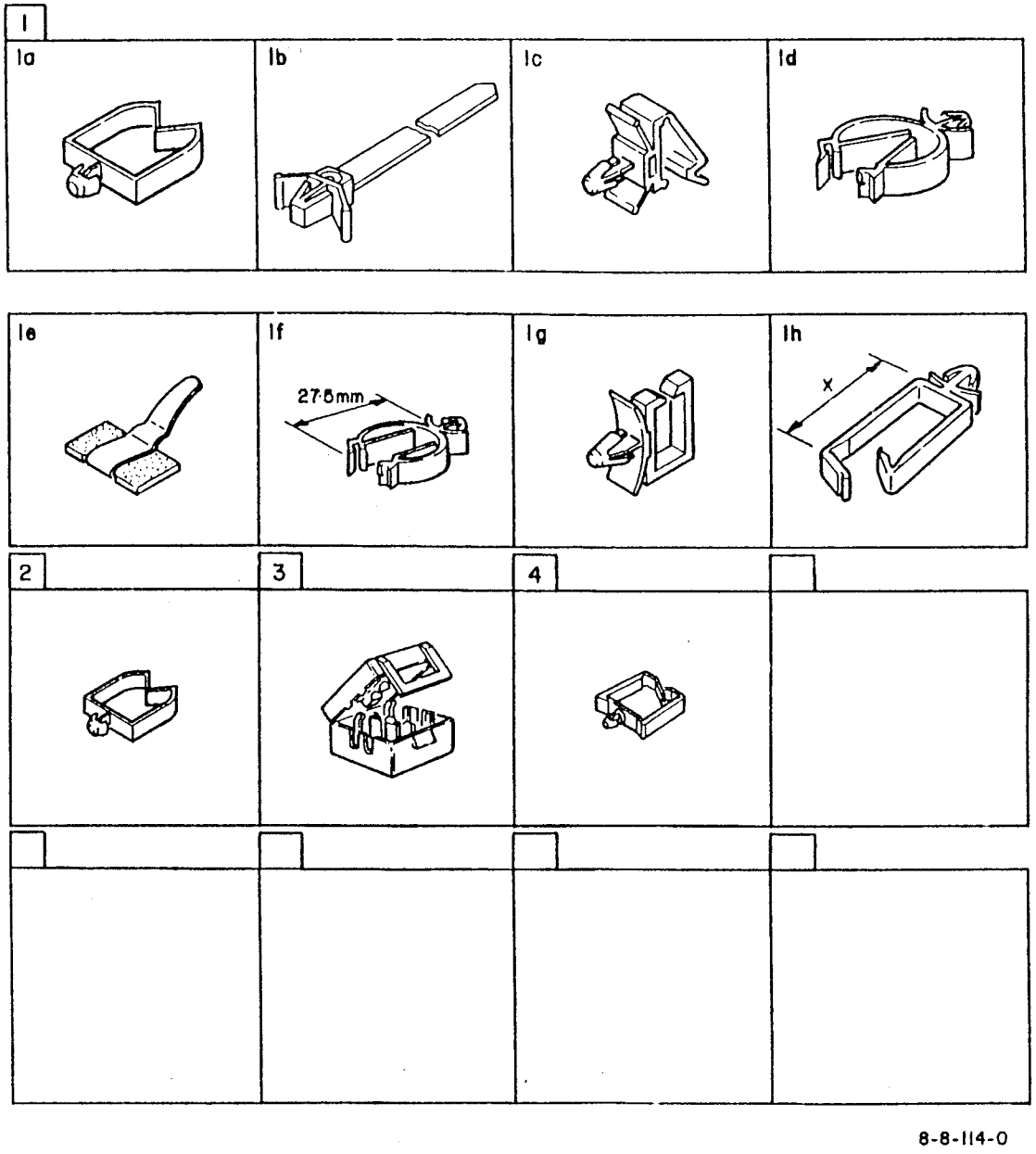

8-8-114-0

PL 18.4 Cable Tie and Push Mount Tie

Item	Part	Description
1	600K30440	CABLE TIE KIT
1A	--	CABLE TIE (QTY.25) (P/O ITEM 2) (203MM L)
2	--	PUSH MOUNT TIE (134MM L) (SEE ITEM 1B ON PL18.3)

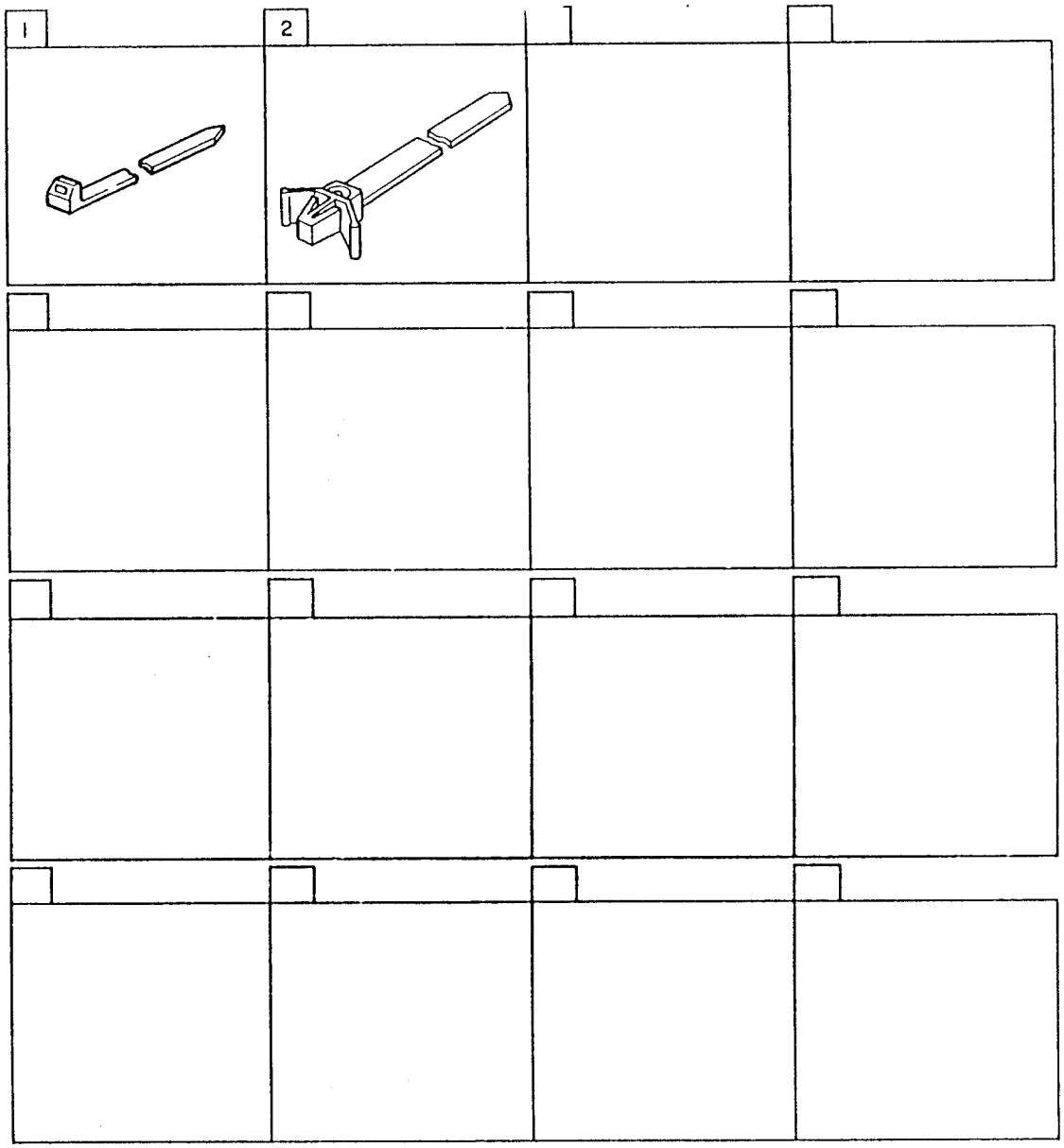

8-8-115-0

PL 18.5 PWB Standoff and PWB Support

Item	Part	Description
1	120E6900	CONTROL PWB STANDOFF
2	120P68202	PWB SUPPORT
-	414W30251	PWB SUPPORT (6.4MM)
-	116E3150	PWB SUPPORT (GRAIB PWB)

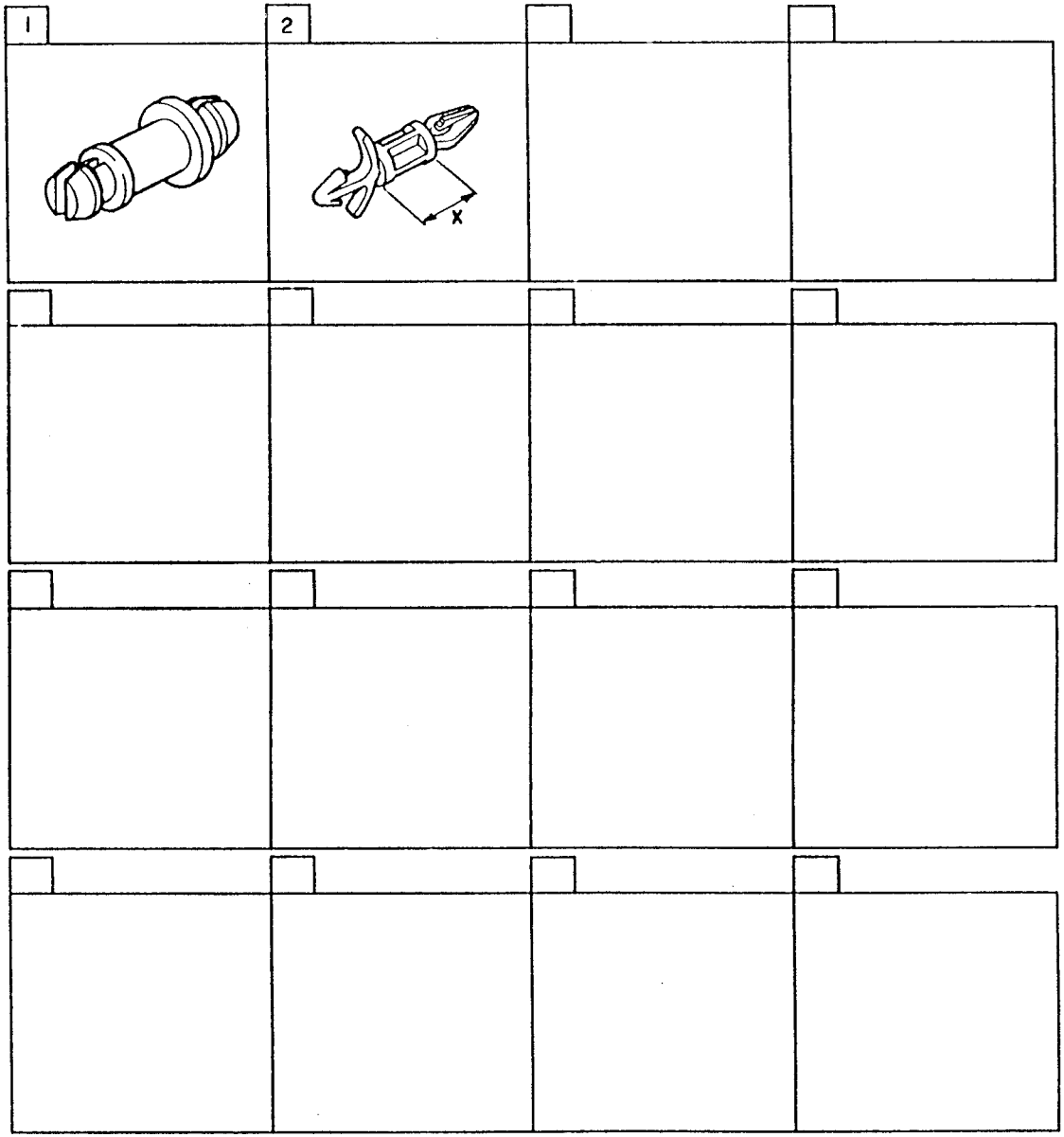

8-8-116-0

PL 18.6 Amp CT Connector (In-line adaptor) Kits, IDC Connector Kits

Item	Part	Description
1	600K90400	AMP CT CONNECTOR (IN-LINE ADAPTOR) KIT
1A	--	CONNECTOR (2 WAY) (QTY.1) (P/O ITEM 1)
1B	--	CONNECTOR (3 WAY) (QTY.1) (P/O ITEM 1)
1C	--	CONNECTOR (6 WAY) (QTY.1) (P/O ITEM 1)
2	600K90390	AMP CT CONNECTOR (IN-LINE ADAPTOR) KIT
2A	--	CONNECTOR (4 WAY) (QTY.1) (P/O ITEM 2)
2B	--	CONNECTOR (8 WAY) (QTY.1) (P/O ITEM 2)
2C	--	CONNECTOR (15 WAY) (QTY.1) (P/O ITEM 2)
3	600K40640	IDC CONNECTOR KIT
3A	--	CONNECTOR (2 WAY) (QTY.4) (P/O ITEM 3)
3B	--	CONNECTOR (3 WAY) (QTY.4) (P/O ITEM 3)
3C	--	CONNECTOR (4 WAY) (QTY.4) (P/O ITEM 3)
3D	--	CONNECTOR (6 WAY) (QTY.4) (P/O ITEM 3)
3E	--	CONNECTOR SPLICING BLOCK (QTY.30) (P/O ITEM 3)
4	600K40650	IDC CONNECTOR KIT
4A	--	CONNECTOR (7 WAY) (QTY.2) (P/O ITEM 4)
4B	--	CONNECTOR (8 WAY) (QTY.2) (P/O ITEM 4)
4C	--	CONNECTOR (9 WAY) (QTY.2) (P/O ITEM 4)
4D	--	CONNECTOR (10 WAY) (QTY.2) (P/O ITEM 4)
4E	--	CONNECTOR (11 WAY) (QTY.2) (P/O ITEM 4)
4F	--	CONNECTOR (12 WAY) (QTY.2) (P/O ITEM 4)
4G	--	CONNECTOR (14 WAY) (QTY.2) (P/O ITEM 4)
4H	--	CONNECTOR (15 WAY) (QTY.2) (P/O ITEM 4)
4J	--	CONNECTOR SPLICING BLOCK (QTY.60) (P/O ITEM 3)
5	113P1561	CONNECTOR COVER (11 WAY)

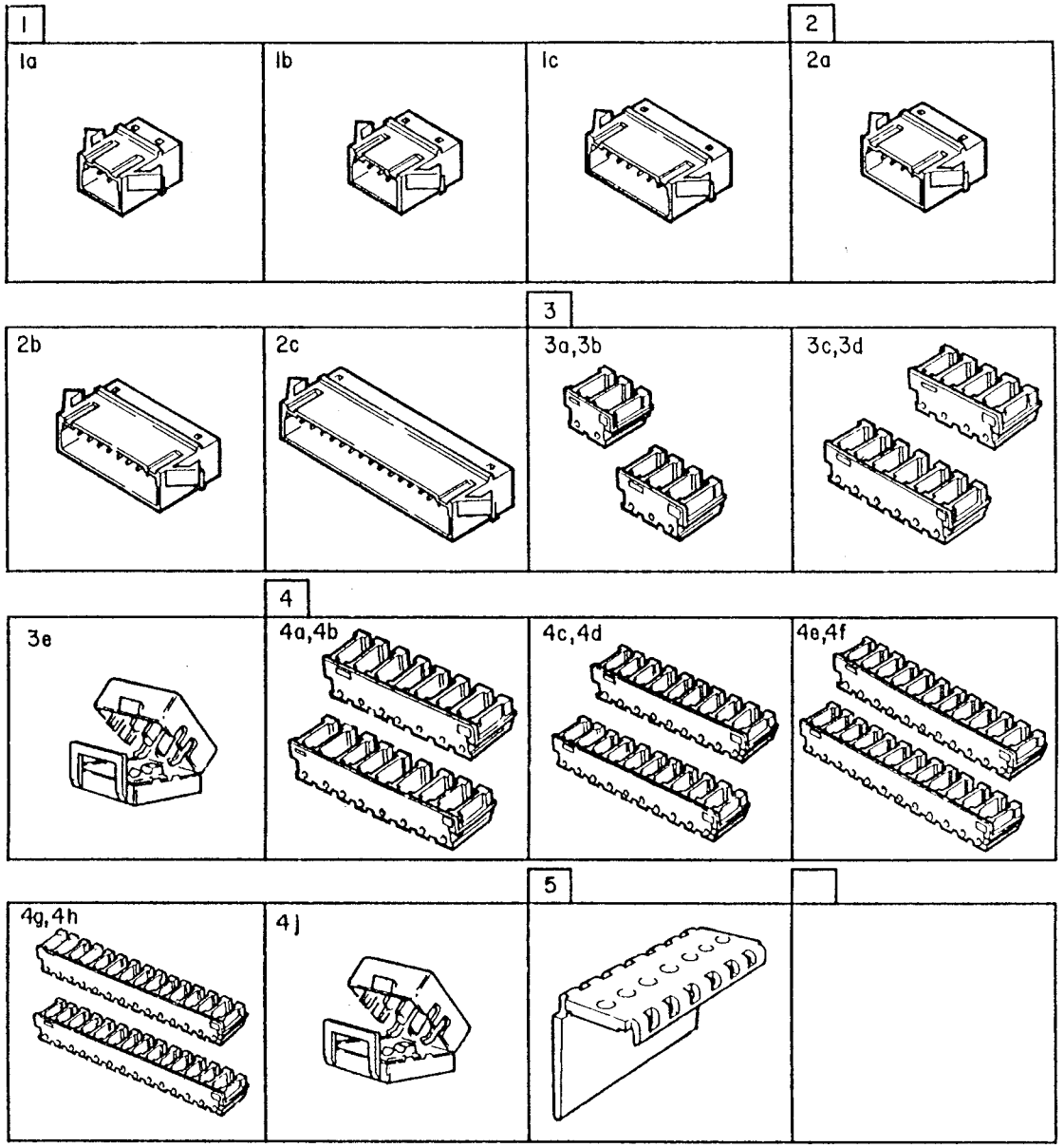

8-8-117-1

PL 18.7 Terminal Pin and Socket (Non-Kits)

Item	Part	Description
1	113P1501	MT6 FEMALE CRIMP SOCKET (16-14 AWG)
-	113P1541	MT6 FEMALE CRIMP SOCKET (22-18 AWG)
2	115P60179	MOLEX SPOX MALE SOCKET
3	115P60200	AMP MINI MNL MALE CRIMP SOCKET
4	113P60199	AMP MINI MNL FEMALE CRIMP PIN
5	116P20503	FASTON 250 CONNECTOR RED SOCKET STRAIGHT CASE (22-18 AWG)
-	116P20504	FASTON 250 CONNECTOR BLUE SOCKET STRAIGHT CASE (16-14 AWG)
-	116P20501	FASTON 187 CONNECTOR RED SOCKET STRAIGHT CASE
6	116P20507	FASTON 250 CONNECTOR RED SOCKET 90° CASE (22-18 AWG)
-	116P20508	FASTON 250 CONNECTOR BLUE SOCKET 90° CASE (16-14 AWG)
7	713W10218	AMP UMNL MALE SOCKET (22-18 AWG)
8	713W10518	AMP UMNL MALE SOCKET (16-14 AWG)
9	713W10318	AMP UMNL FEMALE ROUND PIN (22-18 AWG)
10	713W10618	AMP UMNL FEMALE ROUND PIN (16-14 AWG)
11	715W60000	MOLEX MINI-FIT JUNIOR FEMALE PIN
12	715W60001	MOLEX MINI-FIT JUNIOR MALE SOCKET

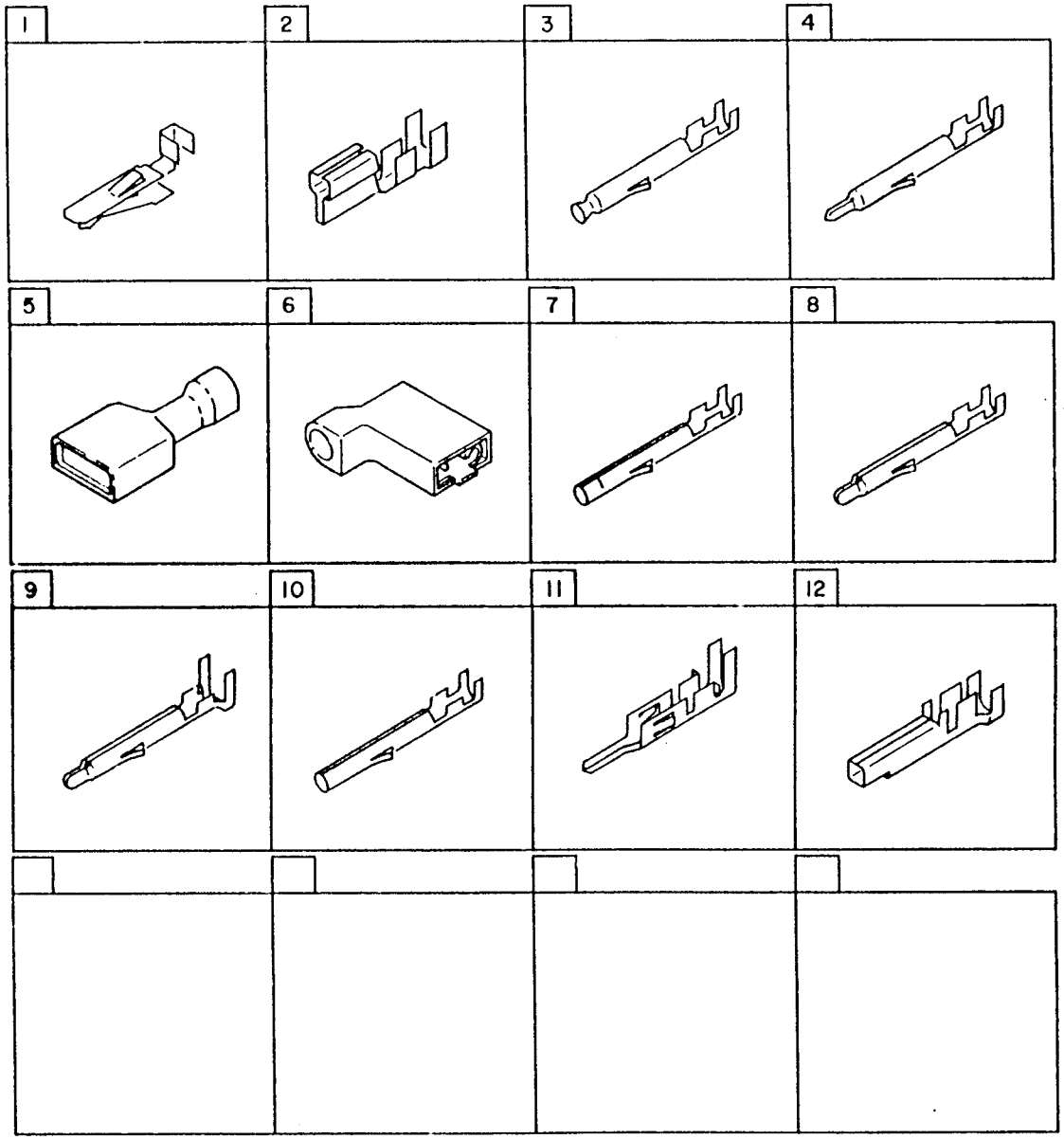

8-8-120-0

Common Hardware

Item	Part	Description
A	252W27350	PLAIN WASHER
B	252W27450	NYLON WASHER
C	354W24251	E-RING
D	158W27655	SCREW
E	158W35655	SCREW
F	354W29251	E-RING
G	354W28251	E-RING
H	354W27251	E-RING
J	113W20457	SCREW
K	158W28255	SCREW
L	354W15251	E-RING
M	354W26251	E-RING
N	354W21251	E-RING
P	153W27850	SCREW
Q	252W29250	NYLON WASHER
R	158W36255	SCREW
S	158W27855	SCREW
T	354W24254	KL-RING
U	286W16050	SPRING PIN
V	271W16250	DOWEL PIN
W	354W27254	KL-RING
X	113W35657	SCREW
Y	285W16251	SPRING PIN
Z	252W29450	NYLON WASHER
BA	354W21254	KL-RING
BB	112W27659	SCREW
BC	113W27451	SCREW
BD	354W30251	E-RING
BE	356W29251	C-RING
BF	113W27651	SCREW
BG	113W27551	SCREW
BH	220W21250	NUT
BI	201W21251	NUT
BK	153W27650	TAP SCREW
BL	158W27650	SCREW
BM	113W20557	SCREW
BN	112W28451	SCREW
BP	141W35651	SET SCREW
BQ	26P63574	SCREW
BR	26E14060	SCREW
BS	112W25255	SCREW
BT	220W350	NUT
BU	354W20652	E-CLIP
BV	26P63518	SCREW
BW	14E21250	WASHER
BX	354W20852	E-CLIP
BY	220W450	NUT
BZ	354W121052	E-CLIP
CA	112W7458	SCREW
CB	271W3652	DOWEL PIN
CD	285W850	CURVED WASHER
CE	158W35855	SCREW
CF	153W28050	SCREW
CG	26E82620	SCREW
CH	271W21250	DOWEL PIN
CJ	26E83180	SCREW
CK	113W36457	SCREW (M4 X 14)
CL	26P62407	SHOULDER SCREW
CM	26E13940	SHOULDER SCREW

Item	Part	Description
CN	26E13440	SHOULDER SCREW
CP	286W2354	PIN
CQ	354W555	K-CLIP
CR	354W20952	E-CLIP
CS	271W1352	PIN
CT	26E22320	SCREW
CU	112W27859	SCREW
CV	26E13960	SHOULDER SCREW
CW	113W21657	SCREW
CX	251W24251	WASHER
CY	26P62716	SHOULDER SCREW
CZ	26E88640	SHOULDER SCREW
DA	220W10450	NUT
DB	102W8355	SCREW
DC	153W23352	SCREW
DD	153W27452	SCREW
DE	26E17760	SCREW
DF	113W15851	SCREW
DG	113W28251	SCREW
DH	141W27451	SET SCREW
DJ	113W28056	SCREW
DK	141W27651	SET SCREW
DL	141W35651	SET SCREW
DM	158W28655	SCREW
DN	27P60449	NUT
DP	113W28651	SCREW
DQ	26E93961	SCREW
DR	26E83010	SCREW
DS	113W35858	SCREW (M4 X 8)
DT	351W51250	RETAINING RING
DU	26E9230	SCREW
DV	158W35452	SCREW
DW	153W22453	SCREW
DX	112W5358	SCREW
DY	26E93810	SCREW (M3)
DZ	26E14040	ADJUST SCREW
EA	26E14050	SCREW

Part Number Index

Part No.	PL
1K19841	6.1
1K20241	14.6
1K20550	7.3
1K22472	4.7
1K22853	4.5
1K84592	3.4A
2K33494	5.7
2K33504	5.7
2K33514	5.7
2K33524	5.7
2K33534	5.7
2K33544	5.7
2K33554	5.7
2K33564	5.7
2K33575	5.7
2K33584	5.7
2K33594	5.7
2K33604	5.7
2K35450	7.6
2E37866	4.2
2E37985	3.9A
2E38035	3.2
2E38083	3.7
2K38420	3.2
2K38720	14.1
2K38341	14.8
2K38920	14.8
2E39243	9.4
2E39782	8.3
2E40092	9.4
2E40104	9.4
2E40114	9.4
2E40124	9.4
2E40991	7.4
2K41200	14.8
2K41210	14.8
2K41221	14.1
2K41234	14.8
2K41480	12.7
2E42430	3.2
2E42661	9.3
2E42793	13.8
2E42802	13.8
2E42812	13.8
2K44487	9.3
2K46241	11.1
2E46605	9.4
2E46613	9.4
2E46670	4.10
2E46971	9.3
2E52872	13.8
2E54192	13.6
2E54652	9.2
2K55380	3.7
2K55390	4.21
2K55730	12.3B
2E56122	11.2
2E56222	13.6
2K58091	9.3
2E58840	9.3
2K61272	7.9A
2K61632	9.4
2K62081	13.6
2E63100	4.2
2K64313	3.9A
2K64323	3.9A
2E74880	9.2
2E74921	9.3
3P1007	9.1
3K6731	9.1
3K6770	9.1
3K7040	9.1
3E18113	4.2
3E18363	3.9B
3E18371	3.9A
3E18382	3.9A
3E19210	13.6
3E19581	4.21
3E20372	3.3
3E20372	3.6
3E24900	9.1
3E80030	7.6
3E80040	7.6
3E80060	7.7
3E80070	7.7
3E80480	5.4
3E80510	3.4A
3E80572	9.1
3E80580	9.1
3E80610	4.21
3E80620	3.4B
3E80630	3.4B
3E80700	3.6
3E80861	9.3
3E80900	4.20
3E80910	3.3
3E80910	3.6
3E80930	3.3
3E80930	3.6
3E80960	7.8
3E80970	7.8
3E80981	7.9B
3E81000	9.2
3E81350	9.1
3E81940	14.5
3E81951	14.6
3E83581	14.5
3S90108	9.1
3K91720	7.7
3K91730	7.8
3K91860	3.3
3K91881	12.1
3K92190	5.1
3K92220	3.3
3E92640	3.1
3E92640	3.5
3E92690	14.5
3E92690	14.7A
4K90311	2.2
4E93130	4.19
4E93290	3.8
4E93290	3.10
4E93370	12.5
4E93421	13.6
4E93960	14.3
4E94050	9.2
5R206	5.7
5R207	5.7
5R208	5.7
5R209	5.7
5R285	5.7
5R286	5.7
5R287	5.7
5R288	5.7
5R311	5.7
5R316	5.7
5R538	5.7
5R539	5.7
5R540	5.7
5R541	5.7
5R556	5.7
5E7831	4.23B
5E7831	4.23C
5E80100	14.4
5R90163	5.7
5R90164	5.7
5R90165	5.7
5R90180	5.7
5K90391	13.2
5E90542	5.1
5E90542	5.3
5K90780	4.4A
5K90780	4.23A
5K90801	4.10
5E90880	13.3
5E90900	13.1
5K90900	4.12
5K90920	4.4A
5K90920	4.23B
5K90952	4.17
5K90970	4.5
5K90970	4.7
5K90970	4.23C
5E91580	4.3
5E91580	4.6
5E91630	4.15
5E91740	4.12
5E91750	5.2
5E91910	4.12
5E91980	4.12
5E92020	4.15
5E92720	14.3
6R365	5.7
6R366	5.7
6R367	5.7
6R368	5.7
6R375	5.7
6R376	5.7
6R377	5.7
6R378	5.7
6R396	5.7
6R550	5.7
6R551	5.7
6R552	5.7
6R553	5.7
6R583	5.7
6R704	5.7
6E26914	3.11
6E26921	3.11
6E28222	4.23B
6E33570	4.23A
6E81280	4.4A
6E81290	4.5
6E81290	4.7
6E81350	7.7
6E81430	4.15
6E81490	5.1
6E81490	5.3
6E81580	4.12
6E81661	9.1
6E81970	2.4A
6E81990	2.4B
6E82061	4.18
6E83260	7.2
6E83431	14.3
6E83460	14.7A
6R90183	5.7
6R90184	5.7
6R90185	5.7
6R90186	5.7
6R90203	5.7
6K92431	4.7
6K92451	5.1
6K92461	13.4
6K92490	7.2
6K92550	13.4
6K92560	13.4
6K92570	13.4
6K92650	2.2
6K92670	3.6
7K5893	3.11
7K5917	3.11
7K6300	4.23A
7E16481	3.10
7E16481	3.11
7E17020	14.4
7E18812	4.23B
7E20161	4.23B
7E20170	4.23B
7E20240	4.23B
7E20731	4.23B
7E24200	4.9
7P60978	13.2
7P61761	4.17
7P62224	13.2
7E80570	13.2
7E80580	13.2
7E81250	1.1
7E81260	1.1
7E81270	1.1
7E81280	1.1
7E81460	4.3
7E81460	4.6
7E81470	4.4B
7E81470	4.6
7E81480	4.4B
7E81480	4.23B
7E81490	4.4B
7E81510	4.6
7E81520	4.6
7E81530	4.8
7E81540	4.8
7E81550	4.3
7E81550	4.6
7E81591	4.10
7E81600	4.10
7E81610	4.10
7E81640	7.9B
7E81670	4.15
7E81670	7.9C
7E81690	7.9C
7E81701	4.15
7E81710	4.15
7E81731	4.17
7E81810	4.4A
7E81810	4.23A
7E81820	4.1
7E81820	4.4A
7E81820	4.23B
7E81840	7.8
7E81940	1.2
7E81950	1.2
7E81960	1.2
7E81970	1.2
7E81980	1.2
7E82020	5.2
7E82030	5.2
7E82040	5.2
7E82050	5.2
7E82080	5.1
7E82120	5.5B
7E82150	5.5B
7E82280	5.2
7E82330	13.1
7E82330	13.2
7E82390	7.6
7E82440	5.3
7E82450	4.12
7E82480	4.15
7E82540	3.8
7E82550	3.8
7E82561	4.18
7E82570	4.17
7E82580	4.17
7E82601	4.17
7E82610	4.15
7E82620	4.15
7E82670	1.1
7E82700	4.4B
7E82740	4.19
7E82750	4.19
7E82760	4.19
7E82780	4.19
7E82790	4.19
7E82800	4.19
7E82810	7.6
7E82820	7.6
7E82830	7.7
7E82870	4.15
7E82870	4.17
7E82880	7.2
7E82900	4.12
7E82910	4.11
7E82920	4.11
7E82930	4.12
7E83141	12.5
7E83150	4.19
7E83170	4.17
7E83210	7.9C
7E83220	7.9C
7E83240	12.3A
7E83250	12.3A
7E83260	12.4A
7E83290	4.15
7E83300	13.2
7E86690	14.6
7E86700	7.9B
7K90790	13.2
7E91250	5.5B
7K91550	1.1
7K91550	3.8
7K91560	1.1
7K91610	4.8
7K91680	1.2
7K91690	1.2
7K91700	1.2
7K91710	1.2
7K91720	1.2
7E91730	4.17
7K91800	5.5B
7K91821	4.17
7E91850	4.18
7K91850	13.2
7E91860	4.18
7K91860	12.4B
7K91871	12.4B
7K91880	12.4B
7K91895	4.8
7K92460	4.19
7E93280	13.2
7E93320	13.3
8R1298	16.1
8R2253	16.1
8R3814	16.1
8R3913	7.5
8K90290	14.2
8K90305	14.2
8K90310	14.2
8E90810	4.12
8E90931	12.4B
8E90941	12.4B
9E26550	4.10
9E26790	13.4
9E26811	2.4A
9E26821	2.4B
9E26830	2.4B
9E26870	12.7
9E26880	4.17
9E26930	12.3B
9E26941	12.3B
9E26960	1.2
9E26970	3.3
9E26970	3.6
9E26990	12.1
9E27020	7.8
9E27030	7.8
9E27040	7.6
9E27110	4.13
9E27120	4.13
9E27130	2.2
9E27150	3.6
9E27160	13.5
9E27170	13.4
9E27190	4.12
9E27200	4.12
9E28550	4.17
9E28560	12.4B
9E28570	12.4B
9E28580	12.4B
9E28620	4.20
9E28741	4.14
9E28850	4.9
9E29290	4.12
9E29450	7.9B
9E29460	7.9B
9E31350	4.20
9E31711	12.3B
9E31760	6.2
9E32280	7.9B
9E33441	4.21
9E33470	14.1
9E33500	14.4
9E33500	14.5
9E33520	14.6
9E33530	14.7A
9E33540	14.6
9E33570	14.5
9E34030	4.12
9E34212	4.23C
9E34360	4.2
9E34491	3.11
9E35731	3.9B
9E36070	14.7B
9E36580	7.9B
9E36580	7.9C
9E39080	12.4B
9E44440	3.3
9E44440	3.6
9E44551	4.21
9E44732	3.9A
9E44971	3.10
9E49201	2.1
9E49361	4.2
9P61902	7.8

Part No.	PL	Part No.	PL	Part No.	PL	Part No.	PL	Part No.	PL	Part No.	PL
9P61903	7.8	11K91150	3.3	3E93150	5.3	20K6330	6.1	23E90890	13.2	31E90930	12.3B
9P62326	13.6	11K91160	4.15	13E93160	5.3	20E17410	3.3	23E90900	13.1	31K91391	14.8
9E80010	14.6	11K91211	2.4A	13E93170	5.3	20E17410	3.6	23E90910	13.3	32K90810	12.7
9E80180	4.20	11E91281	4.14	13E93250	7.6	20E18050	7.9C	23E91101	13.1	32K90820	12.3B
9E80190	13.2	11K91290	3.6	13E93280	4.12	20E18580	13.4	23E92150	4.15	32K90950	5.1
9E80612	13.5	11E91340	7.7	13E93290	4.12	20E90710	14.4	23E92180	4.17	32E91250	3.3
9E82320	7.8	11E91380	7.9B	13E93340	4.1	20K91230	12.4A	23E92190	4.17	32E91250	3.6
9E82450	8.1	11E91430	4.12	13E93340	4.23B	20E91380	2.3	23E92300	13.7	32E92021	13.3
9E83990	13.3	12E5723	9.3	13E93370	1.1	20K91600	14.4	23E92313	12.5	32E92150	2.3
9E84000	13.3	12K91040	7.9C	13E93370	3.8	20K91610	14.7B	23E92320	12.6	32E92170	4.13
9E84140	7.7	12K91071	4.9	13E93370	7.9C	20K91641	14.4	23E92330	12.2	32E92180	2.2
9E84150	7.7	12K91082	4.19	13E93370	12.3A	20K91651	14.4	23E92341	12.2	32E92200	13.5
9E84150	7.8	12K91090	13.5	13E93370	12.4A	20K92520	14.4	23E92341	12.4B	32E92301	6.2
9E84220	4.14	12K91100	4.11	13E93440	4.2	20E92911	2.2	23E92360	2.2	33K90210	4.19
9E84320	4.8	12K91140	4.20	13E93440	4.23C	20E92940	7.9C	23E92380	7.9C	36K90820	12.2
9E84330	4.4B	12K91150	12.6	13E93520	1.1	20E93120	3.6	23E92390	7.9C	36K90830	12.2
9E84340	4.4A	12K91160	13.1	13E93690	12.3A	20E93221	2.2	23E92460	12.4A	36K90840	12.2
9E84340	4.23A	12E91690	4.14	13E93710	4.4B	20E93230	12.6	23E92470	12.4B	36K90850	12.2
9E84350	1.2	12E91800	4.20	13E93720	4.13	20E93240	12.6	23E92860	14.2	38K8850	13.6
9E84360	4.9	12E91810	4.19	14E16961	13.8	20E93250	12.2	23E92870	14.2	38E10077	4.2
9E84380	7.5	12E91841	2.4B	14E19663	3.11	20E93300	12.4A	23E92880	14.3	38E80530	4.22
9E84390	7.5	12E91850	2.4A	14E23070	7.9C	20E93311	12.3A	23E92890	14.6	38K92430	13.3
9E84420	5.1	12E91860	4.17	14K80010	4.16	20E93791	14.3	23E92900	14.4	38K92540	3.3
9E84420	5.3	12E91870	12.3B	14E93060	13.5	20E93801	14.3	23E92910	14.4	38K92690	13.3
9E84450	2.3	12E91890	3.6	14E93270	4.10	20E93810	14.7B	23E92920	14.7B	38K93050	14.5
9E84461	2.3	12E91900	3.3	14E93330	7.9C	20E93820	14.4	23E92930	14.7B	38E93760	3.3
9E84471	2.3	12E91910	3.6	14E93410	3.4A	20E93840	14.4	23E92940	14.7B	41S2300	8.4
9E84490	4.15	12E91920	2.2	14E93421	3.4A	20E93850	14.4	24K90540	3.7	41S2301	8.4
9E84490	7.9C	12E91950	12.3A	14E93431	3.4A	21K1354	9.2	24K90550	3.7	41S2302	8.4
9E84660	3.9A	12E92160	7.9A	14E93441	3.4A	21K90420	14.3	26E9230	19.1	41S2303	8.4
9E84660	4.5	12E92900	4.21	15E18740	6.1	21K90430	14.3	26E13670	4.20	41S2304	8.4
9E84660	4.7	13R71	6.3	15E34820	6.1	21E90900	7.4	26E13940	19.1	41S2305	8.4
9E84670	4.5	13E8140	4.23A	15K84320	14.9	21E91040	13.5	26E13960	19.1	41S2306	8.4
9E84670	4.7	13E8262	4.13	15E84990	2.4B	22K19032	4.23B	26E14040	19.1	41S2307	8.4
9E84690	3.3	13E9200	4.22	15K94410	7.8	22K20570	7.6	26E14050	19.1	41S2308	8.4
9E84690	3.4A	13P60566	12.4B	15K94530	5.2	22K21950	12.4A	26E17760	19.1	41S2309	8.4
9E84720	9.1	13P60606	2.2	15K94721	3.6	22K22160	12.5	26E25550	13.6	41S2310	8.4
9E84800	7.9C	13P60897	3.3	15K94782	1.1	22K22222	4.4A	26E25550	14.9	41S2311	8.4
9E84900	4.2	13P61260	4.10	15K94810	3.3	22K22311	4.1	26P62407	19.1	41S2312	8.4
9E84900	4.23C	13P61270	4.13	15K94871	13.3	22K22740	13.6	26P62661	2.1	41S2313	8.4
9E84910	4.2	13P61393	7.2	16E8240	13.8	22K24200	7.9C	26P63518	19.1	41K3411	2.3
9E84950	4.2	13E80030	1.1	16E90662	3.4A	22K24860	4.14	26P63574	19.1	41K4241	2.3
9E84960	4.2	13E80040	7.2	17E90620	9.3	22K24870	4.14	26E82580	14.7A	41K91580	13.3
9E84980	1.1	13E80970	14.4	17E90630	9.3	22K25110	14.5	26E82580	14.8	41K91601	2.4A
9E84980	3.8	13E81130	5.1	17E91710	13.5	22K26982	4.9	26E82620	14.8	41K91660	2.3
9K90521	7.3	13E81150	12.4A	17E91710	14.1	22K27350	4.13	26E82620	19.1	42E771	13.8
9E90750	2.3	13K90461	5.1	19K3170	2.1	22K27511	7.9A	26E83010	14.8	48K104	9.4
9E90750	2.4A	13E90660	4.18	19E10462	3.10	22K32191	7.7	26E83010	19.1	48K113	9.4
9P90876	3.9A	13E90660	4.19	19E21270	3.7	22S63112	7.8	26E83180	4.5	48K280	3.3
9E91960	12.3A	13E90660	4.22	19K90650	3.6	22E00090	4.17	26E83180	4.7	48K1140	13.6
9E92110	4.17	13E90660	12.4B	19E91000	4.14	22K84790	4.15	26E83180	19.1	48K3500	14.8
9E92640	4.20	13E90760	4.10	19E91020	5.3	22K84800	4.15	26E83671	3.4A	48K9121	14.7A
9E93060	6.2	13E90840	3.6	19K91054	6.3	22E91140	4.16	26E92560	4.20	48K11941	5.7
9E93070	6.2	13E90840	4.10	19K91060	12.3A	22E91171	4.20	26E93560	14.8	48K80410	12.1
9E93240	7.8	13E90840	13.6	19K91060	12.3B	22E93080	4.16	26E93810	19.1	48K80462	6.3
10E2904	3.12	13E90980	2.2	19E93150	2.2	22E93090	3.4A	26E93961	19.1	48K80470	5.4
10E2914	3.12	13E90980	4.12	19E93150	2.3	22E93100	4.15	27P60449	19.1	48E80510	14.7A
10E2932	3.13	13E90980	4.22	19E93161	7.9A	22E93110	4.14	29E15681	3.9B	48K81491	9.2
10E2942	3.13	13E91220	4.18	19E93161	7.9C	22K93360	4.18	29K90191	14.6	48K81620	7.6
10K90070	3.1	13E92400	12.5	19E93220	3.3	22E93380	2.4B	29E91880	7.9A	48E90010	4.8
10K90070	3.5	13E92760	12.6	19E93220	3.4B	22E93620	13.3	29E92190	14.3	48E90090	3.2
10E90230	5.1	13E92890	4.5	19E93220	3.6	22E93830	13.3	29E92260	14.8	48E90090	3.7
10E90230	5.3	13E92890	4.7	19E93220	3.10	22E94180	7.2	30K46970	4.23A	48E90360	9.2
10E90271	3.4B	13E92890	4.23C	19E93310	13.5	22E94240	14.2	30E73960	5.1	48E90370	9.2
11E3900	3.9B	13E93040	4.10	19E93320	13.5	22E94260	14.6	30E76061	4.15	48E90511	5.5B
11E4641	4.21	13E93060	7.5	19E93330	13.6	22E94280	14.6	30K89320	12.7	48E90682	9.4
11E4651	4.21	13E93080	4.15	19E93340	13.6	22E94300	14.6	30K89920	14.9	48E90740	9.3
11E30420	4.21	13E93080	7.9C	19E93450	4.4B	22E94310	14.7A	31E90760	13.2	48E90750	9.3
11K90830	13.4	13E93090	7.9B	19E93510	12.1	23K460	3.11	31E90770	13.2	48E90760	5.5B
11K90992	7.5	13E93090	7.9C	19E94061	14.6	23E6410	3.11	31E90840	13.4	48E91010	9.3
11K91010	7.9C	13E93150	5.1	19E94070	14.6	23E9621	4.23B	31E90920	12.3B	48E91071	12.1