6-2 Узел сканера

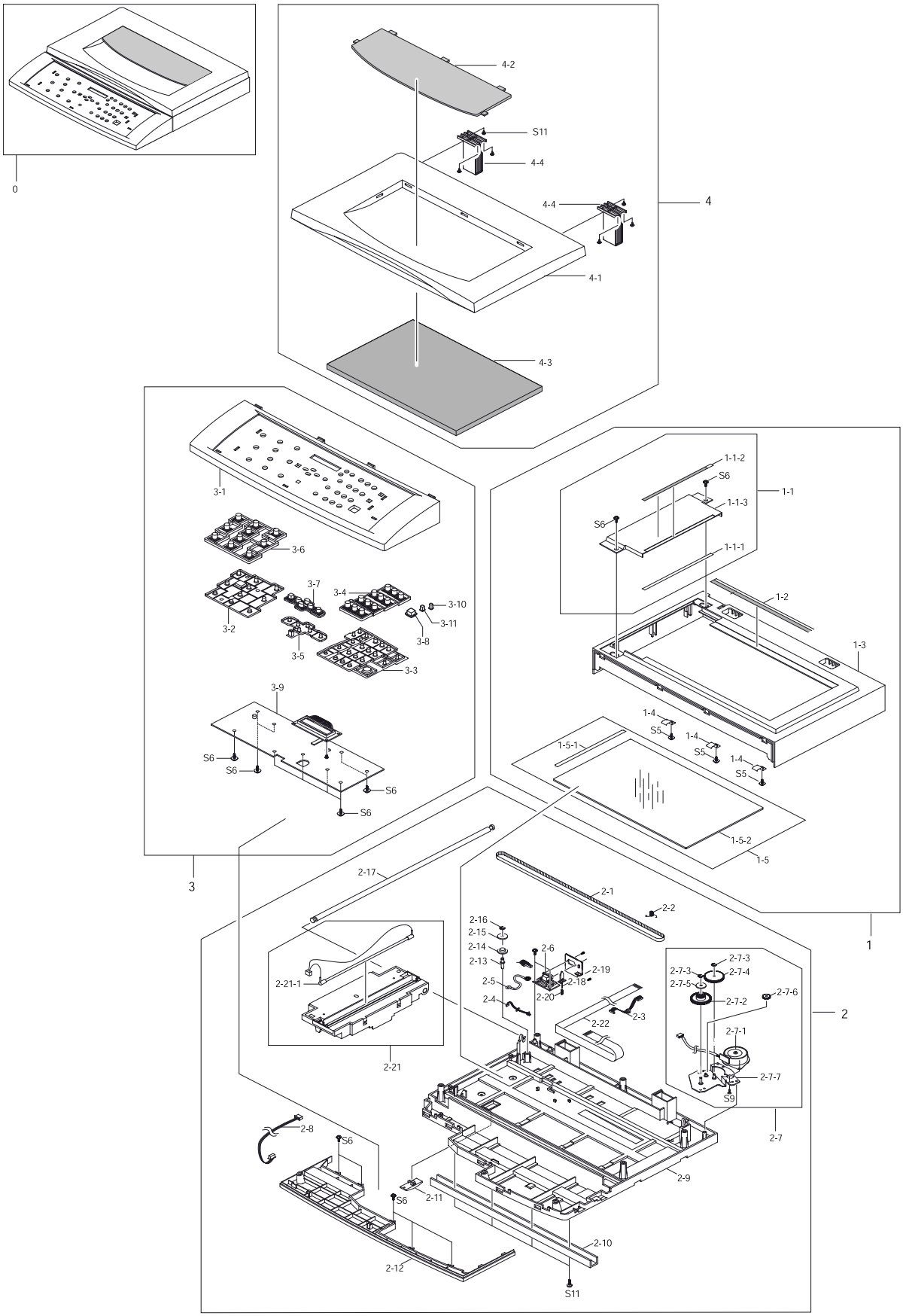

Перечень запасных частей узла сканера

(SA - доступность для технического обслуживания)

NO	DESCRIPTION	SEC CODE	Part Number	Q'TY	SA	REMARK
0	ELA HOU-SCANNER ASS'Y(C)	JC96-02630A		1	X	
1	MEA UNIT-SCAN UPPER ASS'Y	JC97-01679A	002N02150	1	O	
1-1	AS-DUMMY UPPER AS(FRV)	TBD		1	X	
1-1-1	SHEET-DUMMY UPPER	JC63-00074A		1	X	
1-1-2	LABEL(L)-REGISTRATION EDGE (L)	JB68-00469A	091N00678	1	O	
1-1-3	PMO-DUMMY UPPER(C)	JC72-00875A	002N02145	1	X	
1-2	PPR-REGISTRATION EDGE (F)	JC72-00809A		1	X	
1-3	PMO-COVER SCAN UPPER	JC72-00758A		1	X	
1-4	IPR-HOLDER GLASS	JB70-00148A		3	X	
1-5	MEA UNIT-GLASS PLATEN ASS'Y	JC97-01580A		1	X	
1-5-1	LABEL(P)-SHEET SHADING(B)	JB68-00749A		1	X	
1-5-2	MCT-GLASS SCANNER(LEGAL)	JC74-00018A		1	X	
2	ELA HOU-SCAN LOWER ASS'Y(SEC)	JC96-02260A		1	X	
2-1	BELT-TIMING GEAR	6602-001090	091N00679	1	O	
2-2	SPRING ETC-BELT	JB61-00059A	023N00955	1	O	
2-3	CBF HARNESS-SCAN MOTOR	JB39-00077A		1	X	
2-4	CBF HARNESS-MAIN-ENGINE	JC39-00030A		1	X	
2-5	CBF HARNESS-DRIVER GND	JB39-00065A		1	X	
2-6	PBA SUB-D-SUB	JC81-00781A		1	X	
2-7	ELA HOU-SCAN MOTOR ASS'Y	JC81-00431A		1	X	
2-7-1	MOTOR STEP-SCAN	JB31-00011A		1	X	
2-7-2	GEAR-TIMING	JC66-00082A		1	X	
2-7-3	RING-E	6044-000125	005N00781	3	X	
2-7-4	GEAR-REDUCTION	JB66-00084A		1	X	
2-7-5	PMO-HOLDER BELT	JB72-00764A		1	X	
2-7-6	GEAR-IDLE	JB66-00083A		1	X	
2-7-7	IPR-BRK MOTOR(PLATEN)	JC70-00226A		1	X	
2-8	CBF HARNESS-OPE	JC39-00167A		1	X	
2-9	PMO-COVER SCAN LOWER	JC72-00757A		1	X	
2-10	IPR-CHANNEL BASE FRAME	JC70-00239A		1	X	
2-11	PMO-HOLDER CCD	JB72-00759A		1	X	
2-12	PMO-COVER DUMMY LOWER	JC72-00753A		1	X	
2-13	ICT-INSERT SHAFT	JB70-00154A		1	X	
2-14	PMO-PULLEY	JB72-00763A		1	X	
2-15	PMO-HOLDER BELT	JB72-00764A		1	X	
2-16	RING-E	6044-000125	005N00781	1	X	
2-17	ICT-SHAFT CCD	JC70-00253A		1	X	
2-18	PMO-LEVER SENSOR	JC72-00755A	011N00473	1	O	
2-19	IPR-BRK SCAN B'D	JC70-00228A	140N05963	1	O	
2-20	SPRING ETC-EXIT	JB61-70939A		1	X	
2-21	ELEC/MECH-SCANNER MODULE	JC96-02105A	109N00584	1	O	
2-21-1	AS-LAMP CCD	JC81-00783A		1	X	
2-22	CBF SIGNAL-CCD FFC	JC39-00188A	117N01594	1	O	

O : доступен для технического обслуживания; X : недоступен для технического обслуживания

Перечень запасных частей узла сканера (продолжение)

(SA - доступность для технического обслуживания)

NO	DESCRIPTION	SEC CODE	Part Number	Q'TY	SA	REMARK
3	ELA HOU-OPE COVER(C)	TBD		1	O	
3-1	PMO-OPE COVER	JC72-00756A	002N02010	1	O	
3-2	RMP-RUBBER FUNCTION	JC73-00092A	019N00616	1	O	
3-3	RMO-RUBBER TEL	JC73-00043A	019N00617	1	O	
3-4	PMO-KEY TEL	JC72-00452A	029N00274	1	O	
3-5	RMO-RUBBER SCROLL	JC73-00044A	019N00618	1	O	
3-6	PMO-KEY FUNCTION(A)	JC72-00754A	029N00275	1	O	
3-7	PMO-KEY SCROLL	JC72-00453A	029N00280	1	O	
3-8	PMO-KEY START	JC72-00450A	029N00279	1	O	
3-9	PBA-OPE	JC81-00433A	140N05937	1	O	
3-10	PMO-KEY REPORT	JC72-00457B	029N00277	1	O	
3-11	PMO-KEY STOP	JC72-00451A	029N00278	1	O	
4	MEA UNIT-PLATEN COVER ASS'Y(C)	JC97-01680A	002N02147	1	O	
4-1	PMO-COVER PLATEN(C)	JC72-00873A	002N02148	1	O	
4-2	PMO-COVER DUMMY PLAEN	JC72-00874A	002N02149	1	O	
4-3	PPR-SPONG SHEET	JC72-00751A	025N00081	1	O	
4-4	MEA UNIT-HINES ASS'Y(C)	JC97-01681A	003N00880	2	O	

O : доступен для технического обслуживания; X : недоступен для технического обслуживания

6-3 Узел боковой крышки

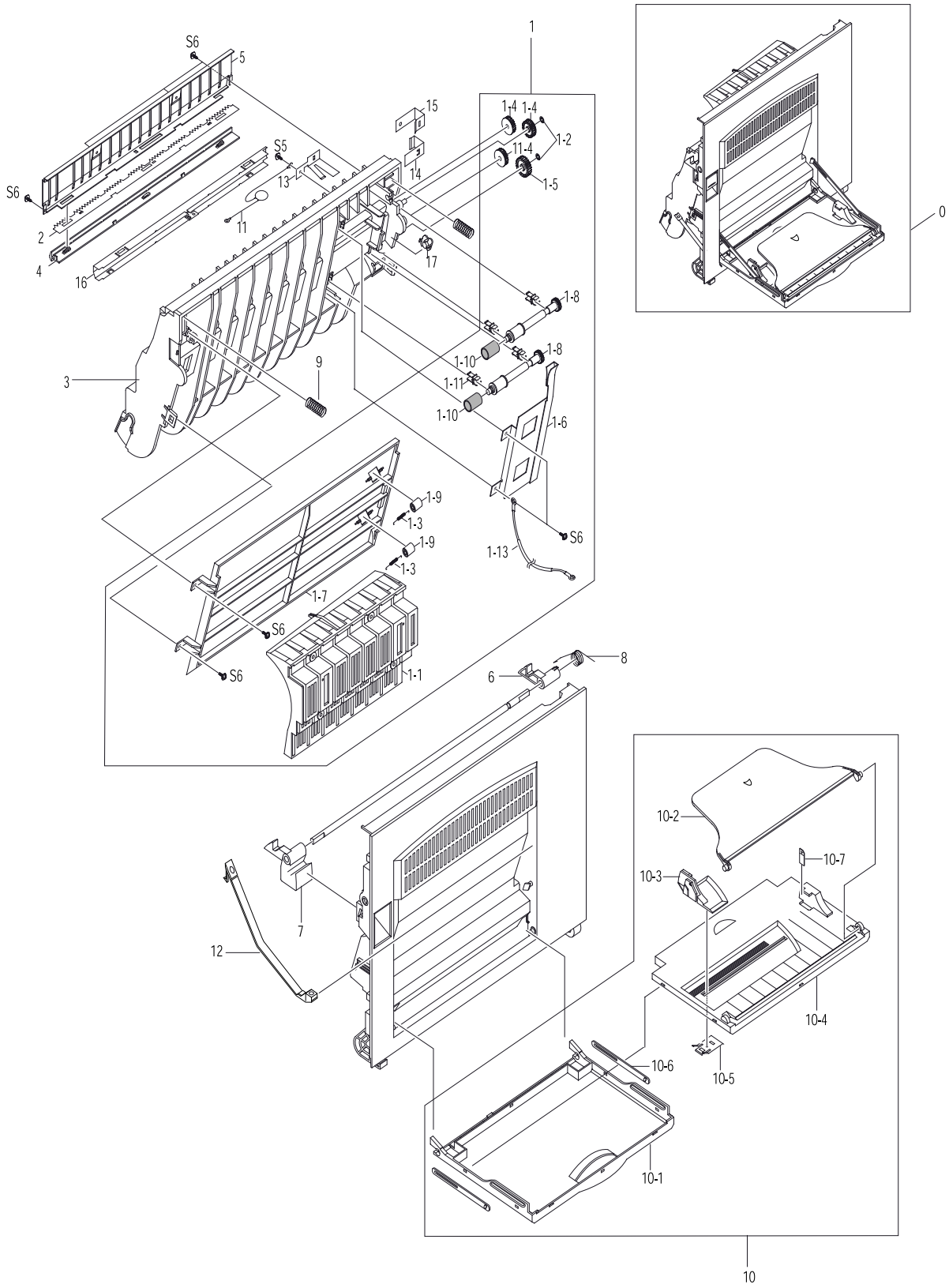

Перечень запасных частей узла боковой крышки

(SA - доступность для технического обслуживания)

NO	DESCRIPTION	SEC CODE	Part Number	Q'TY	SA	REMARK
0	ELA HOU-SIDE COVER ASS'Y	JC96-02183A	022N02016	1	O	
1	MEA UNIT-DUPLEX ASS'Y	JC97-01578A		1	X	
1-1	PMO-GUIDE DP SIDE	JC72-00806A		1	X	
1-2	RING-CS	6044-000001		2	X	
1-3	SPRING-FUSER EXIT	JC61-70976A		2	X	
1-4	GEAR-DUP IDLER 17	JC66-00341A		3	X	
1-5	GEAR-MP/DUP DRV	JC66-00346A		1	X	
1-6	IPR-BRKT G DUP	JC70-00233A		1	X	
1-7	PMO-GP LOWER DP	JC72-00732A		1	X	
1-8	PMO-SHAFT DUP DRIVER	JC72-00764A		2	X	
1-9	PMO-ROLLER_EXIT	JC72-40361A		2	X	
1-10	RPR-RUBBER EXIT	JC73-10203A		2	X	
1-11	PMO-BUSHING TX(B4)	JG72-40744A		4	X	
1-12	PMO-TIE STOPPER	JC72-00766A	120N00394	2	O	
1-13	CBF HARNESS-SCAN GND	JC39-00046A		1	X	
2	IPR-PLATE SAW	JC70-10232A		2	X	
3	PMO-FEED FRAME	JC72-00731A		1	X	
4	PMO-HOLDER SAW	JC72-41213A		1	X	
5	IPR-BRACKET GUIDE A	JC70-00229A		1	X	
6	PMO-LOCKER SIDE R	JC72-00763A	019N00619	1	O	
7	PMO-LOCKER OPEN	JC72-00762A	019N00620	1	O	
8	SPRING-LOCKER TORSION	JC61-00479A	009N01366	1	O	
9	SPRING-FEED	JC61-00478A	022N01476	2	O	
10	MEC UNIT-TRAY ASS'Y	JC97-01577A	002N02011	1	O	
10-1	PMO-TRAY CASE, MP	JC72-00776A		1	X	
10-2	PMO-TRAY-EXT, MP	JC72-00778A		1	X	
10-3	PMO-SIDE GUIDE, MP	JC72-00547F		1	X	
10-4	PMO-TRAY COVER, MP	JC72-00777A		1	X	
10-5	IPR-GUIDE LATCH, MP	JB70-10906A		1	X	
10-6	PMO-TRAY LINK,MP	JC72-00857A		1	X	
10-7	LABEL(R)-HEIGHT,MP	JC68-00697A		1	X	
11	CBF HARNESS-OPE GND	JC39-00036A		1	X	
12	PMO-TIE STOPPER	JC72-00766A	120N00394	2	X	
13	IPR-BRKT GROUND B	JC70-00230A		1	X	
14	IPR-BRKT GROUND TR	JC70-00231A		1	X	
15	IPR-BRKT GROUND A	JC70-00232A		1	X	
16	IPR-BRACKET GUIDE B	JC70-00234A		1	X	
17	PMO-BUSHING FEED	JC72-00730A		1	X	

O : доступен для технического обслуживания; X : недоступен для технического обслуживания

6-4 Узел лотка

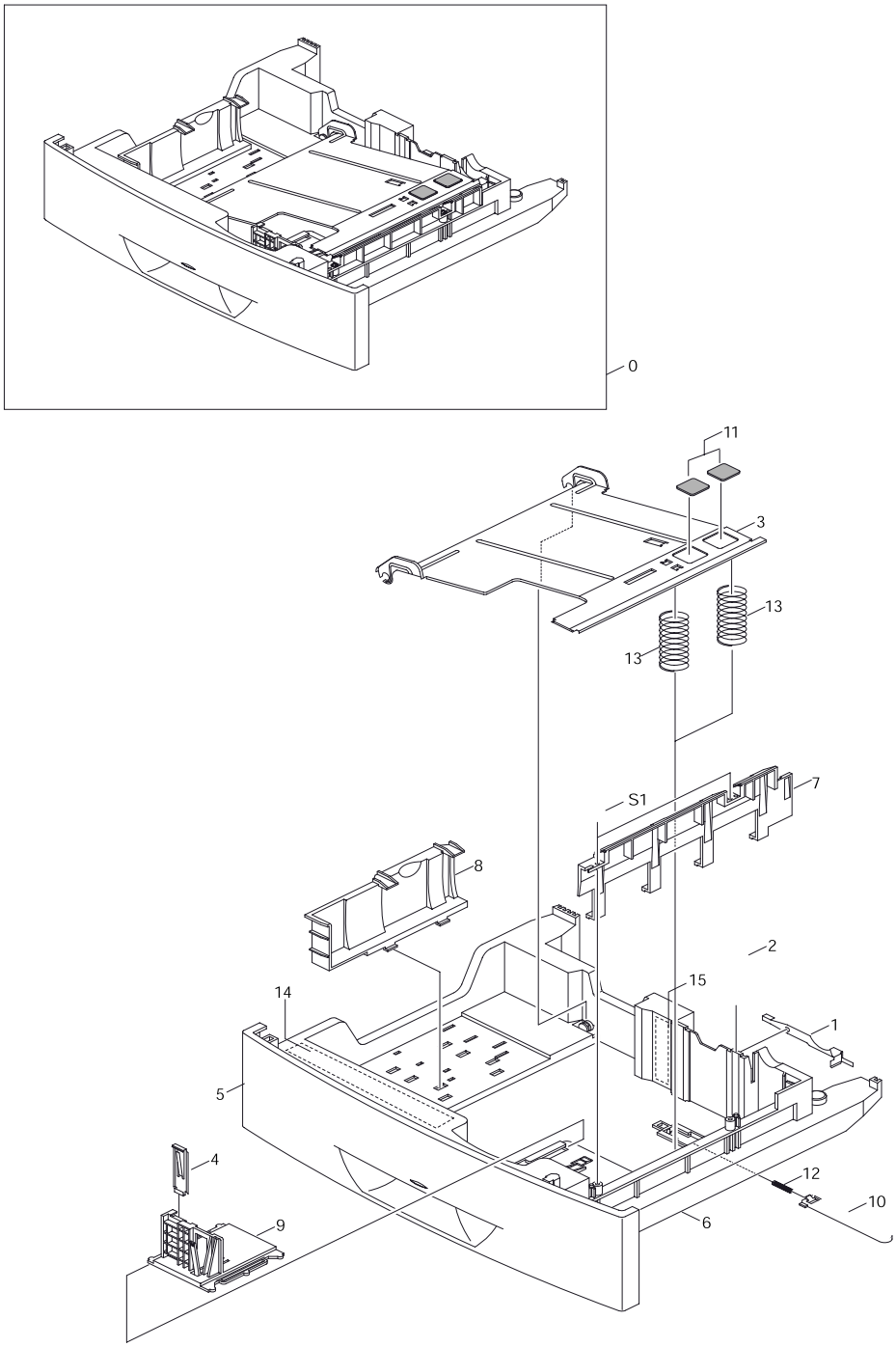

Перечень запасных частей узла лотка

(SA - доступность для технического обслуживания)

NO	DESCRIPTION	SEC CODE	Part Number	Q'TY	SA	REMARK
0	MEC-CASSETTE ASS'Y(LETTER)	JC75-00144A	050N00393	1	O	LETTER
	MEC-CASSETTE ASS'Y(A4)	JC75-00144B	050N00394	1	O	A4
1	IPR-FINGE	JC70-00220A		1	X	
2	IPR-GUIDE PLT PAPER	JC70-10923A		1	X	
3	IPR-PLATE K/UP	JC70-00221A		1	X	
4	IPR-SPR PLT G/SIDE	JC70-10929A	015N00437	1	O	
5	PMO-COVER CASSETTE	JC72-00713A		1	X	
6	PMO-FRAME CASSETTE	JC72-00716A		1	X	
7	PMO-GUIDE FRONT CST	JC72-00798A		1	X	
8	PMO-GUIDE REAR	JC72-00717A	032N00351	1	O	
9	PMO-GUIDE/SIDE CST	JC72-40967D	032N00352	1	O	
10	PMO-LOCKER PLATE	JC72-41210A	015N00438	1	O	
11	PRP-PAD CAST	JC74-00015A		2	X	
12	SPRING-LOCKER PLATE	JG61-70531A	015N00439	1	O	
13	SPRING-PLATE K/UP	JC61-00455A	015N00435	2	O	
14	LABEL(R)-INSTRUCTION CST	JC68-00692A		1	X	
15	LABEL(R)-HEIGHT CST	JC68-00709A		1	X	
S1	SCREW-TAPTITE	6003-000196		5	X	

O : доступен для технического обслуживания; X : недоступен для технического обслуживания

6-5 Узел вывода

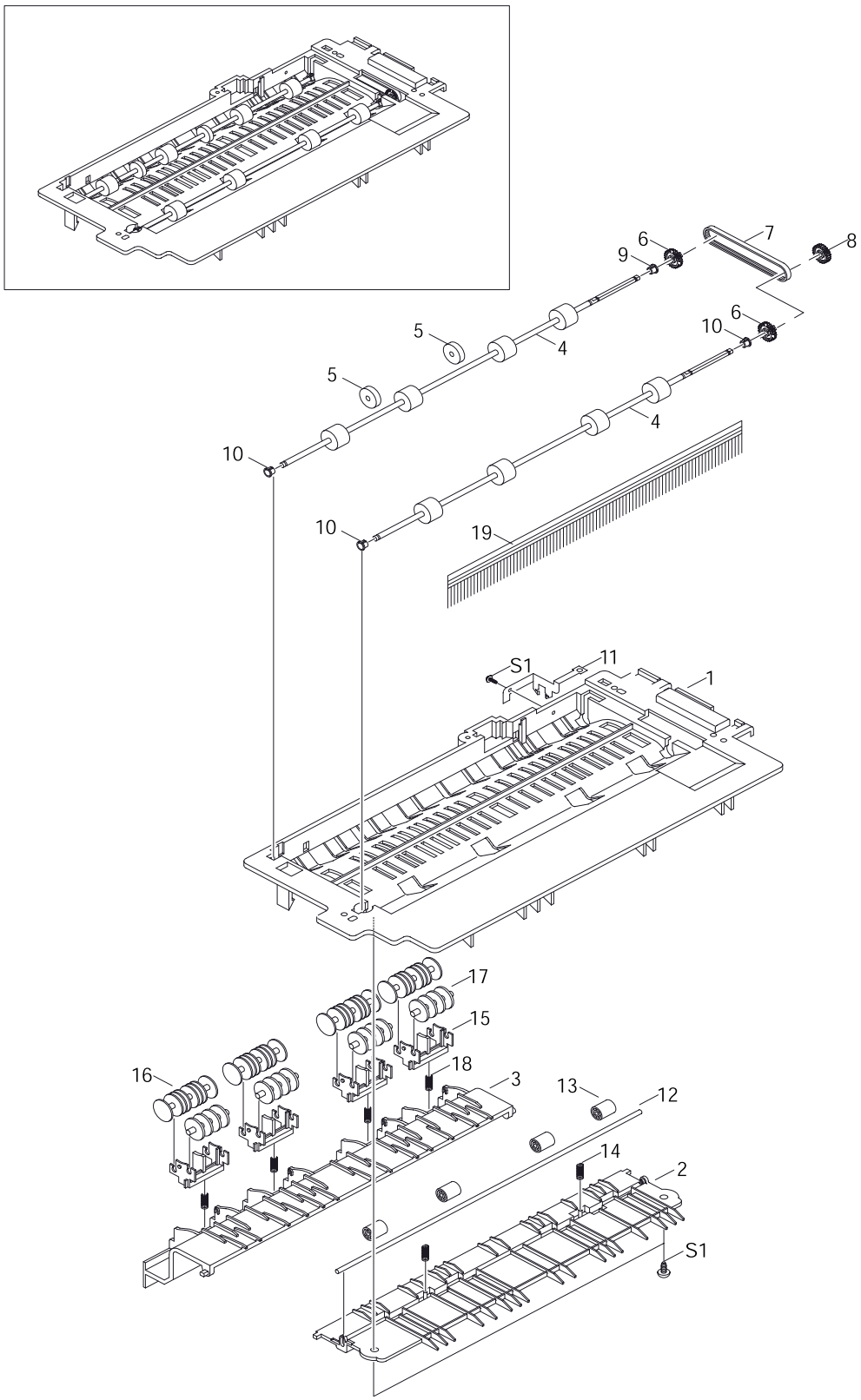

Перечень запасных частей узла вывода

(SA - доступность для технического обслуживания)

NO	DESCRIPTION	SEC CODE	Part Number	Q'TY	SA	REMARK
0	MEC-EXIT ASS'Y	JC75-00145A	600N01736	1	O	
1	PMO-GUIDE-EXIT UPPER	JC72-00708A		1	X	
2	PMO-GUIDE-EXIT LOWER	JC72-00710A		1	X	
3	PMO-GUIDE-JAM REMOVE	JC72-00712A		1	X	
4	MEC-ROLLER EXIT DRV	JC75-00127A	007N01115	2	O	
5	PMO-ROLLER DECURL	JC72-00833A	022N01474	4	O	
6	PMO-PULLEY DUPLEX	JC72-40980A		2	X	
7	BELT-TIMING GEAR	6602-001084		1	X	
8	GEAR-DUPLEX	JC66-40912A		1	X	
9	PMO-BEARING LARGE DP	JC72-40978A	013N00514	1	O	Black
10	PMO-BEARING LARGE DP	JC72-00885A		3	X	White
11	IPR-GROUND-EXIT	JC70-00252A		1	X	
12	ICT-SHAFT-EXIT LOWER ID	JC70-00274A		1	X	
13	PMO-ROLLER_EXIT	JC72-40361A		4	X	
14	SPRING-EXIT ROLL FD	JC61-70911A		2	X	
15	PMO-HOLDER EXIT ROLL	JC72-41006A		4	X	
16	PMO-ROLLER FD F	JC72-41007A		4	X	
17	PMO-ROLLER FD R	JC72-41008A		4	X	
18	SPRING-EXIT LOWER IDLE	JC61-00484A		4	X	
19	MEC- BRUSH ANTISTATIC	JC75-00095A	115N00354	1	O	
S1	SCREW-TAPTITE	6003-000196		3	X	

O : доступен для технического обслуживания; X : недоступен для технического обслуживания

6-6 Узел подачи

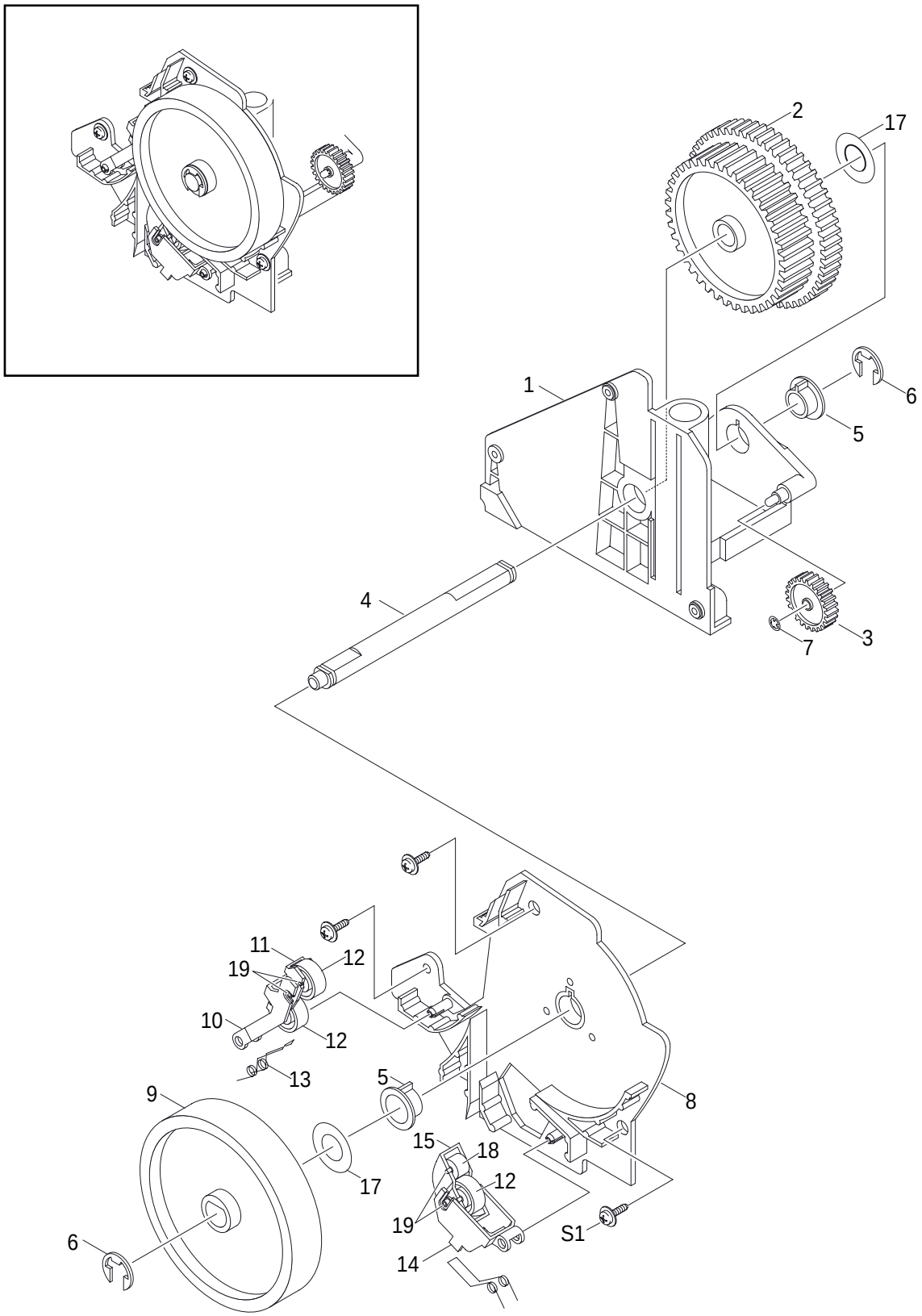

Перечень запасных частей узла подачи

(SA - доступность для технического обслуживания)

NO	DESCRIPTION	SEC CODE	Part Number	Q'TY	SA	REMARK
0	MEC-FEED ASS'Y	JC75-00143A	022N01472	1	O	
1	PMO-FRAME FEED	JC72-00821A		1	X	
2	GEAR-FEED	JC66-00332A		1	X	
3	GEAR-MP/DUP DRV	JC66-00346A		1	X	
4	ICT-SHAFT FEED	JC70-00267A		1	X	
5	PMO-BUSHING_P/U,MP	JC72-41364A	013N00515	1	X	
6	RING-E	6044-000125	005N00781	2	X	
7	RING-CS	6044-000001		1	X	
8	PMO-BRKT FEED	JC72-00720A		1	X	
9	PMO-ROLLER FEED	JC72-00727A	022N01470	1	O	
10	PMO-HOLDER PINCH C	JC72-00723A		1	X	
11	PMO-HOLDER PINCH SUB	JC72-00725A		1	X	
12	PMO-ROLLER FEED L	JC72-40261A		3	X	
13	SPRING-FEED CAST	JC61-00480A		1	X	
14	PMO-HOLDER PINCH M	JC72-00724A		1	X	
15	PMO-SUB HOLDER FEED	JC72-40266A		1	X	
16	SPRING-FEED MP	JC61-00481A		1	X	
17	WASHER-PLAIN	6031-000021		2	X	
18	PMO-ROLLER FEED S	JC72-40262A		1	X	
19	IPR-SHAFT FEED IDLER	JC70-10230A		4	X	
S1	SCREW-TAPTITE	6003-000196		3	X	

O : доступен для технического обслуживания; X : недоступен для технического обслуживания

6-7 Узел обходного лотка

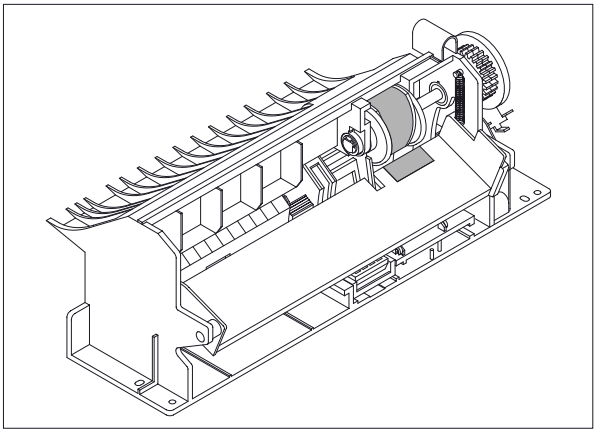

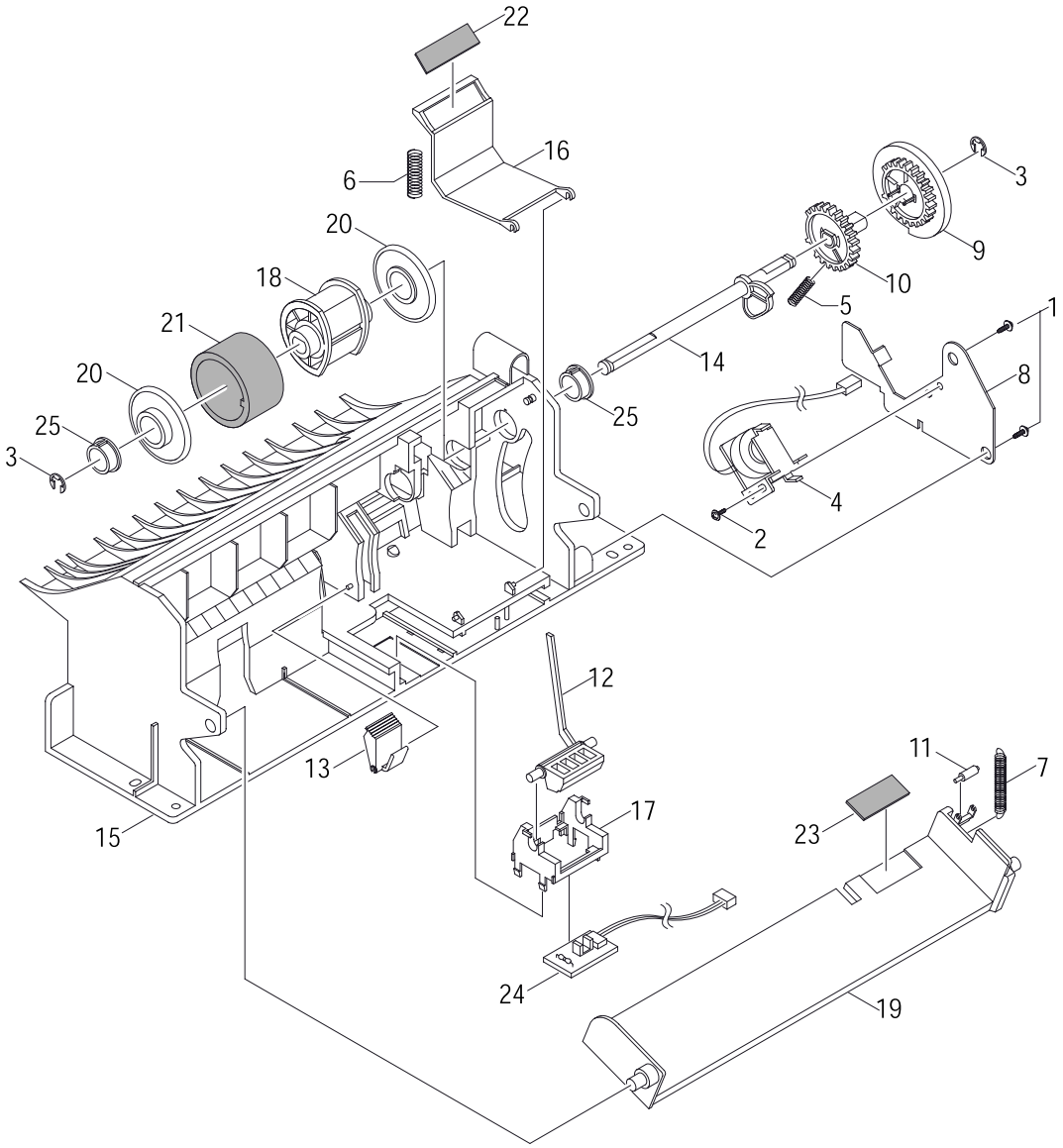

Перечень запасных частей узла обходного лотка

(SA - доступность для технического обслуживания)

NO	DESCRIPTION	SEC CODE	Part Number	Q'TY	SA	REMARK
0	ELA HOU-MP ASS'Y	JC96-02182A	600N01741	1	O	
1	SCREW-TAPTITE	6003-000119		2	X	
2	SCREW-TAPTITE	6003-000266		1	X	
3	RING-E	6044-000125	005N00781	2	O	
4	SOLENOID-MP	JC33-00006A	121N00595	1	O	
5	SPRING-CAM MP	JC61-00003A	009N01364	1	O	
6	SPRING-PICK UP MP	JC61-00041A		1	X	
7	SPRING-KNOCKUP,MP	JC61-00483A	009N01365	1	O	
8	IPR-BRACKET SOLENOIDE	JC70-00237A		1	X	
9	PMO-HOLDER CAM MPF	JC72-00055A		1	X	
10	PMO-GEAR P/U MPF	JC72-00056A		1	X	
11	PMO-ROLLER CAM.MP	JC72-00761A		1	X	
12	PMO-ACTUATOR,MP	JC72-00767A	120N00392	1	O	
13	PMO-ADJUSTER,MP	JC72-00768A	022N01479	1	O	
14	PMO-CAM PICK UP,MP	JC72-00769A	022N01480	1	O	
15	PMO-FRAME,MP	JC72-00770A		1	X	
16	PMO-HOLDER PAD,MP	JC72-00771A	019N00613	1	O	
17	PMO-HOLDER SENSOR,MP	JC72-00772A	130N01206	1	O	
18	PMO-HOUSING PICK UP,MP	JC72-00773A		1	X	
19	PMO-PLATE KNOCK UP,MP	JC72-00775A		1	X	
20	PMO-IDLE PICK UP,MP	JC72-41027A	013N00516	2	O	
21	RPR-RUBBER PICK UP,MP	JC73-00089A		1	X	
22	RPR-RCT-PAD-PICKUP,MP	JC73-00090A	019N00612	1	O	
23	RPR-PAD KNOCK UP,MP	JC73-10906A	019N00614	1	O	
24	PBA SUB-MP SEN	JC92-01362A	130N01203	1	O	
25	PMO-BUSHING PICKUP,MP	JC72-41364A	013N00515	1	O	
26	A/S MATERAL-PICKUP,MP	JC81-00427A	022N01483	1	O	

O : доступен для технического обслуживания; X : недоступен для технического обслуживания

6-8 Узел нижнего шасси

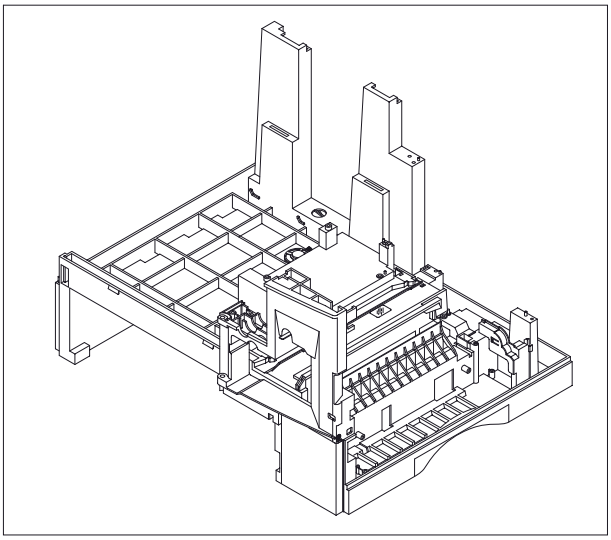

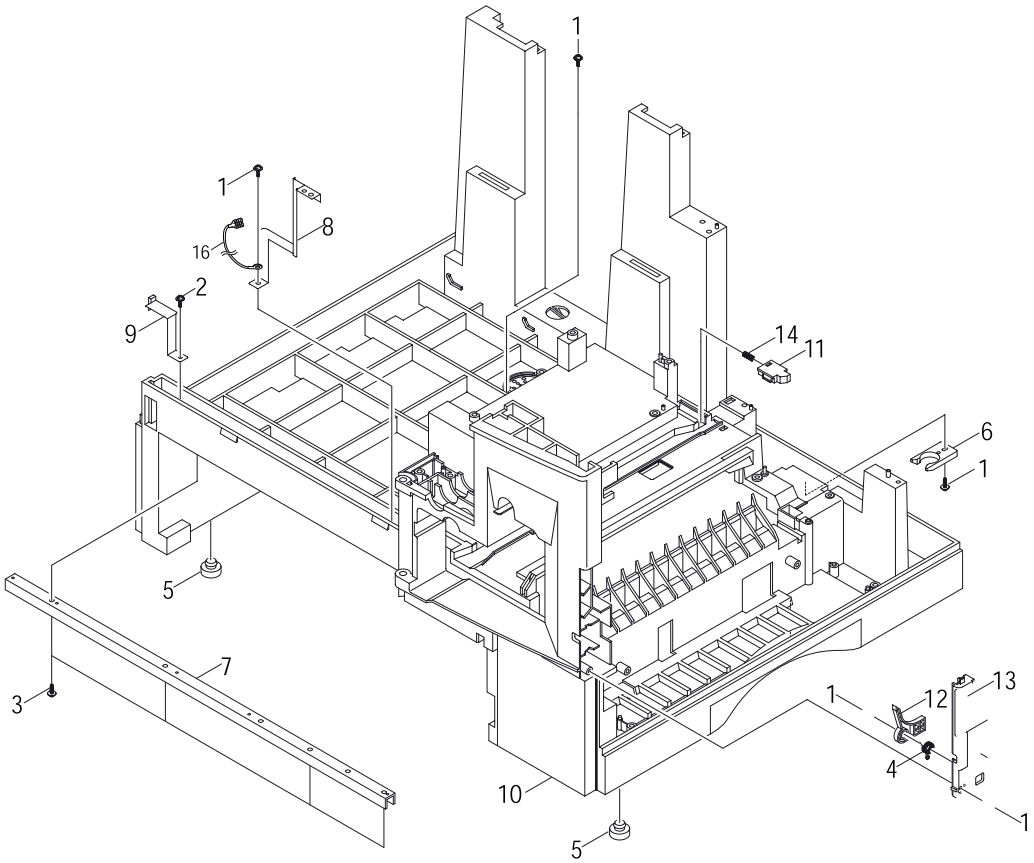

Перечень запасных частей узла нижнего шасси

(SA - доступность для технического обслуживания)

NO	DESCRIPTION	SEC CODE	Part Number	Q'TY	SA	REMARK
0	ELA HOU-BASE FRAME ASS'Y(C)	JC96-02501A		1	X	
1	SCREW-TAPTITE	6003-000196		5	X	
2	SCREW-TAPTITE	6003-000269		2	X	
3	SCREW-TAPTITE	6003-001256		4	X	
4	SPRING-TORSION	JC61-00486A		1	X	
5	FOOT-RUBBER	JC61-40001A	017N00212	2	O	
6	CAM-CATCH	JC66-00050A		1	X	
7	IPR-CHANNEL BASE FRAME	JC70-00239A		1	X	
8	IPR-GROUND PLATE A(OPC)	JC70-00240A	015N00440	1	O	
9	IPR-GROUND PLATE B(BASE)	JC70-00241A	015N00441	1	O	
10	PMO-BASE FRAME	JC72-00779A		1	X	
11	PMO-BRACKET PUSH DEVE	JC72-00780A		2	X	
12	PMO-BRACKET SIDE OPEN	JC72-00781A	030N00606	1	O	
13	PMO-COVER FRONT DUMMY	JC72-00785A		1	X	
14	SPRING-DEVE REAR	JC61-00550A		1	X	
15	SPRING-DEVE FRONT	JC61-00551A		1	X	
16	CBF HARNESS-OPC GND	JC39-00179A		1	X	

O : доступен для технического обслуживания; X : недоступен для технического обслуживания

6-9 Узел подхвата

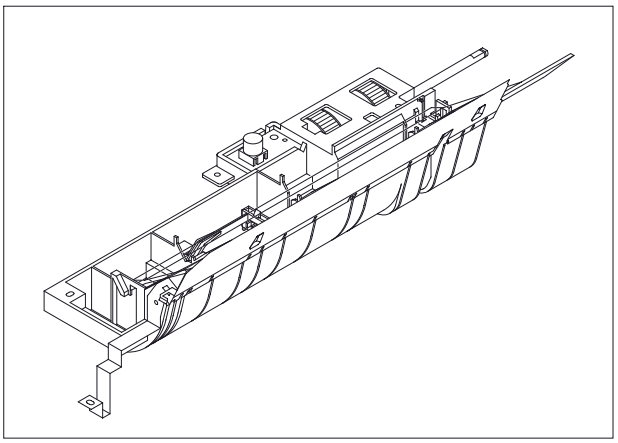

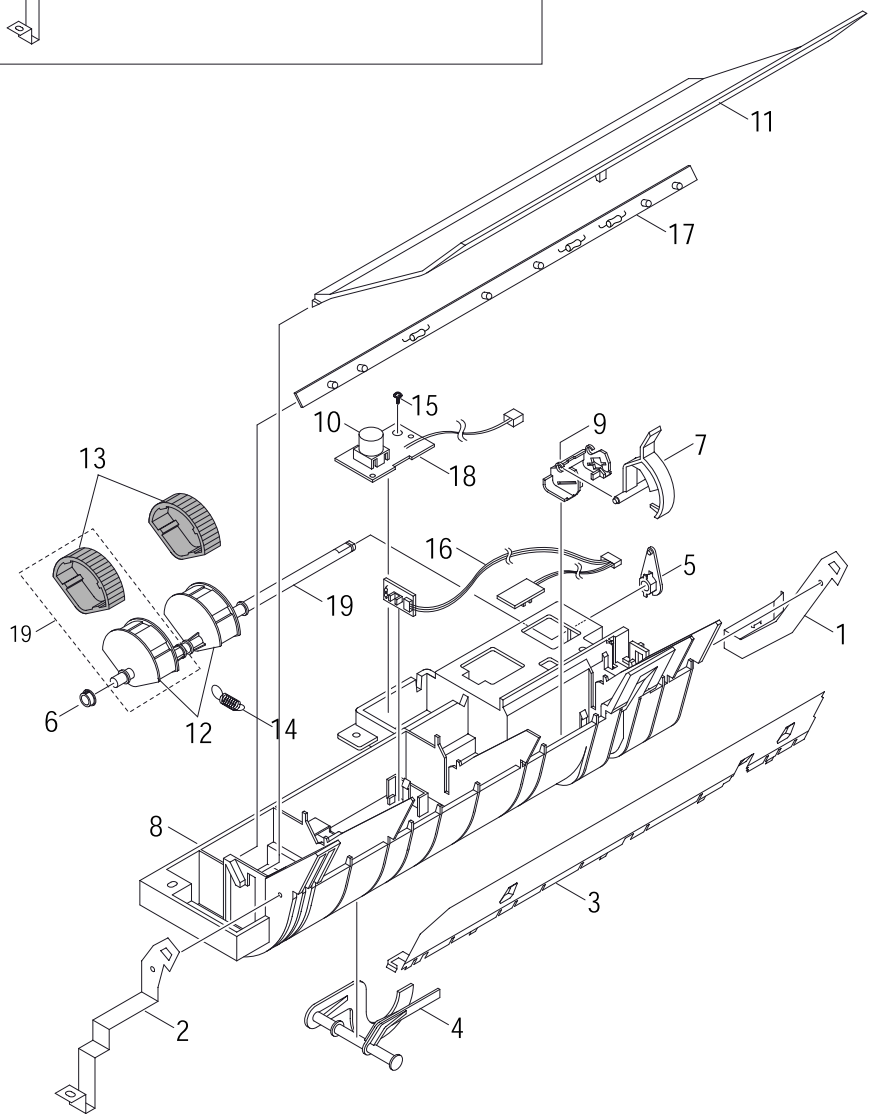

Перечень запасных частей узла подхвата

(SA - доступность для технического обслуживания)

NO	DESCRIPTION	SEC CODE	Part Number	Q'TY	SA	REMARK
0	ELA HOU-PICKUP ASS'Y	JC96-02180A	022N01485	1	O	
1	IPR-GND FEED	JC70-00238A		1	X	
2	IPR-GND INPUT	JC70-00235A	152N01895	1	O	
3	IPR-GUIDE INPUT	JC70-00222A	022N01481	1	O	
4	PMO-ACTUATOR EMPTY	JC72-00719A	120N00393	1	O	
5	PMO-BEARING SHAFT	JC72-41191A	006N01093	1	O	
6	PMO-BUSHING PICK UP MP	JC72-41364A	013N00515	1	X	
7	PMO-FEED SENSOR	JC72-00721A		1	X	
8	PMO-GUIDE PAPER	JC72-00722A	038N00395	1	O	
9	PMO-HOLDER SENSOR FEED	JC72-00726A		1	X	
10	PMO-LENS TONER SENSOR	JC72-00803A		1	X	
11	PMO-PTL PATH	JC72-00822A		1	X	
12	PMO-SHAFT PICK UP	JC72-00729A		1	X	
13	RPR-RUBBER PICK UP	JC73-00086A	022N01477	2	O	
14	SPRING-PICKUP	JC61-00482A	009N01362	1	O	
15	SCREW-TAPTITE	6003-000119		1	X	
16	PBA SUB-FEED+P.EMP SEN.	JC92-01363A	130N01204	1	O	
17	PBA SUB-PTL	JC92-01361A	140N05940	1	O	
18	PBA SUB-TONER_TX	JC92-01359A	130N01207	1	O	
19	A/S MATERAL-PICKUP,CST	JC81-00428A	022N01484	1	O	

O : доступен для технического обслуживания; X : недоступен для технического обслуживания

6-10 Узел привода

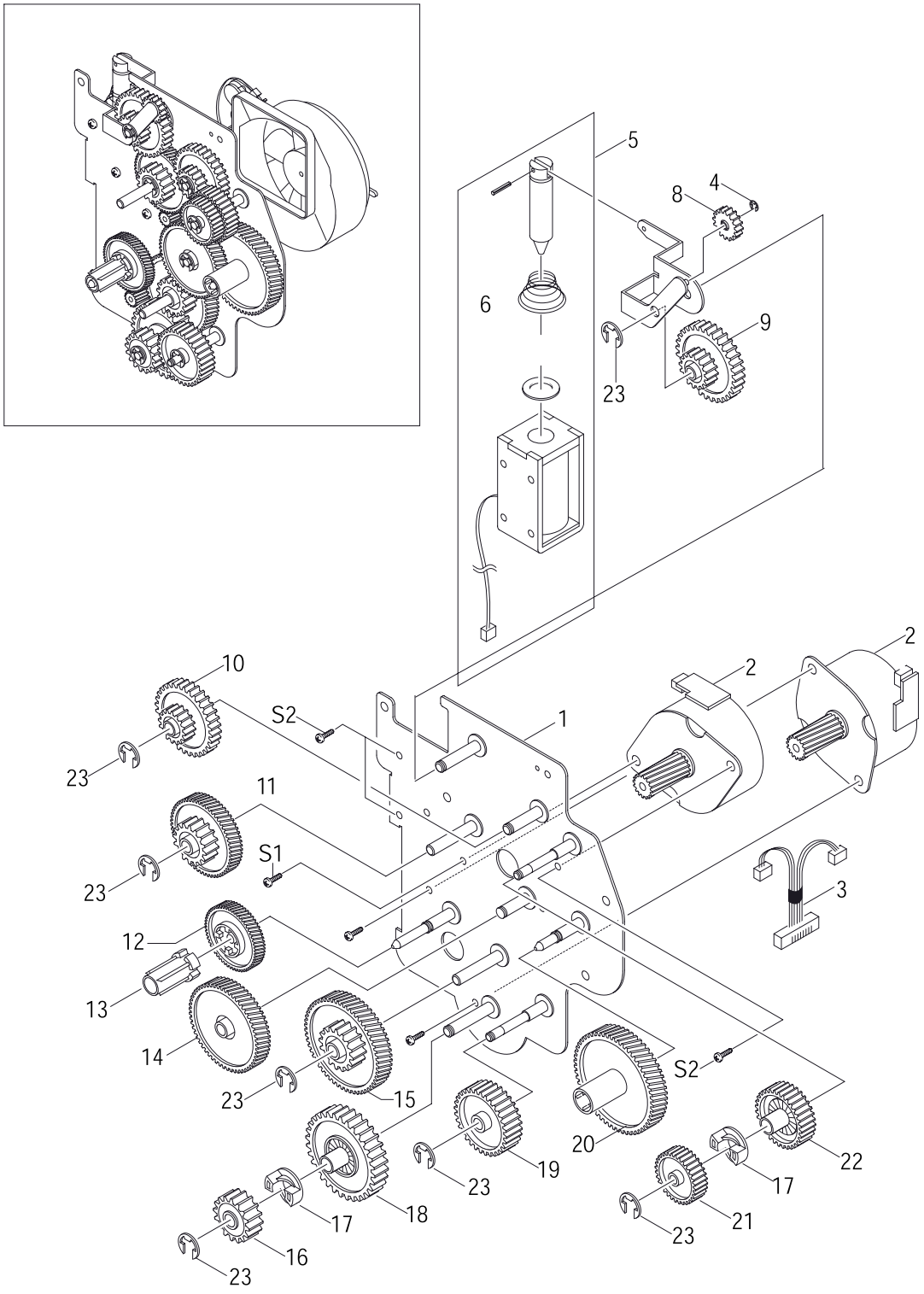

Перечень запасных частей узла привода

(SA - доступность для технического обслуживания)

NO	DESCRIPTION	SEC CODE	Part Number	Q'TY	SA	REMARK
0	ELA HOU-DRIVE ASS'Y	JC96-02181A	007N01117	1	X	
1	IPR-BRKT MOTOR	JC70-00257A		1	X	
2	MOTOR-STEP	JC31-00002B	127N01378	2	O	
3	CBF-HARNESS-MOTOR	JC39-00165A		1	X	
4	RING-E	6044-000159		1	X	
5	SOLENOID-DUPLEX	JC33-00008A	121N00596	1	O	
6	SPRING SOLENOID DP	JC61-70915A		1	X	
7	IPR-LINK SOLENOID	JC70-00258A		1	X	
8	GEAR-EXIT/U,ID	JC66-40211B		1	X	
9	GEAR-SWING DRV	JC66-00349A		1	X	
10	GEAR-35/19	JC66-00350A		1	X	
11	GEAR-71/23	JC66-00345A		1	X	
12	GEAR-DEVE DRV	JC66-00338A		1	X	
13	PMO-DEV/COUPLING	JC72-00743A		1	X	
14	GEAR-RDCN,OPC	JC66-00351A		1	X	
15	GEAR-86/23	JC66-00337A		1	X	
16	GEAR-RDCN FEED OUTER	JC66-00343A		1	X	
17	GEAR-HUB CLUTCH	JC66-00340A		2	X	
18	GEAR-RDCN FEED INNER	JC66-00342A		1	X	
19	GEAR-FEED DRV	JC66-00348A		1	X	
20	GEAR-OPC DRV	JC66-00347A		1	X	
21	GEAR-GEAR FUSER DRV OUTER	JC66-00334A		1	X	
22	GEAR-FUSER DRV INNER	JC66-00333A		1	X	
23	RING-E	6044-000231		8	X	
S1	SCREW-TAPTITE	6003-000196		5	X	
S2	SCREW-TAPTITE	6003-000269		7	X	

O : доступен для технического обслуживания; X : недоступен для технического обслуживания

6-11 Узел главного шасси

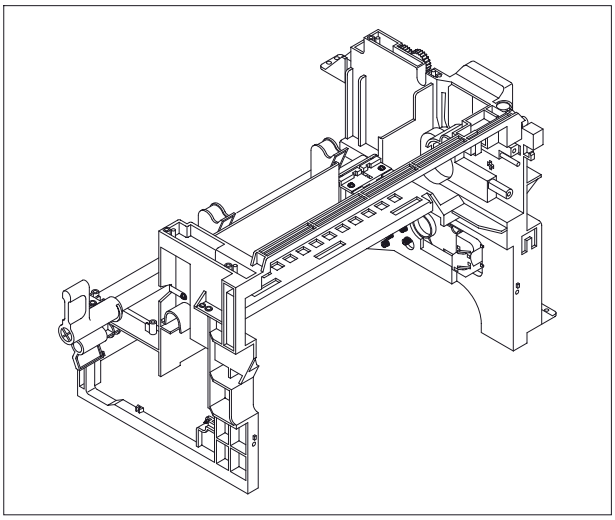

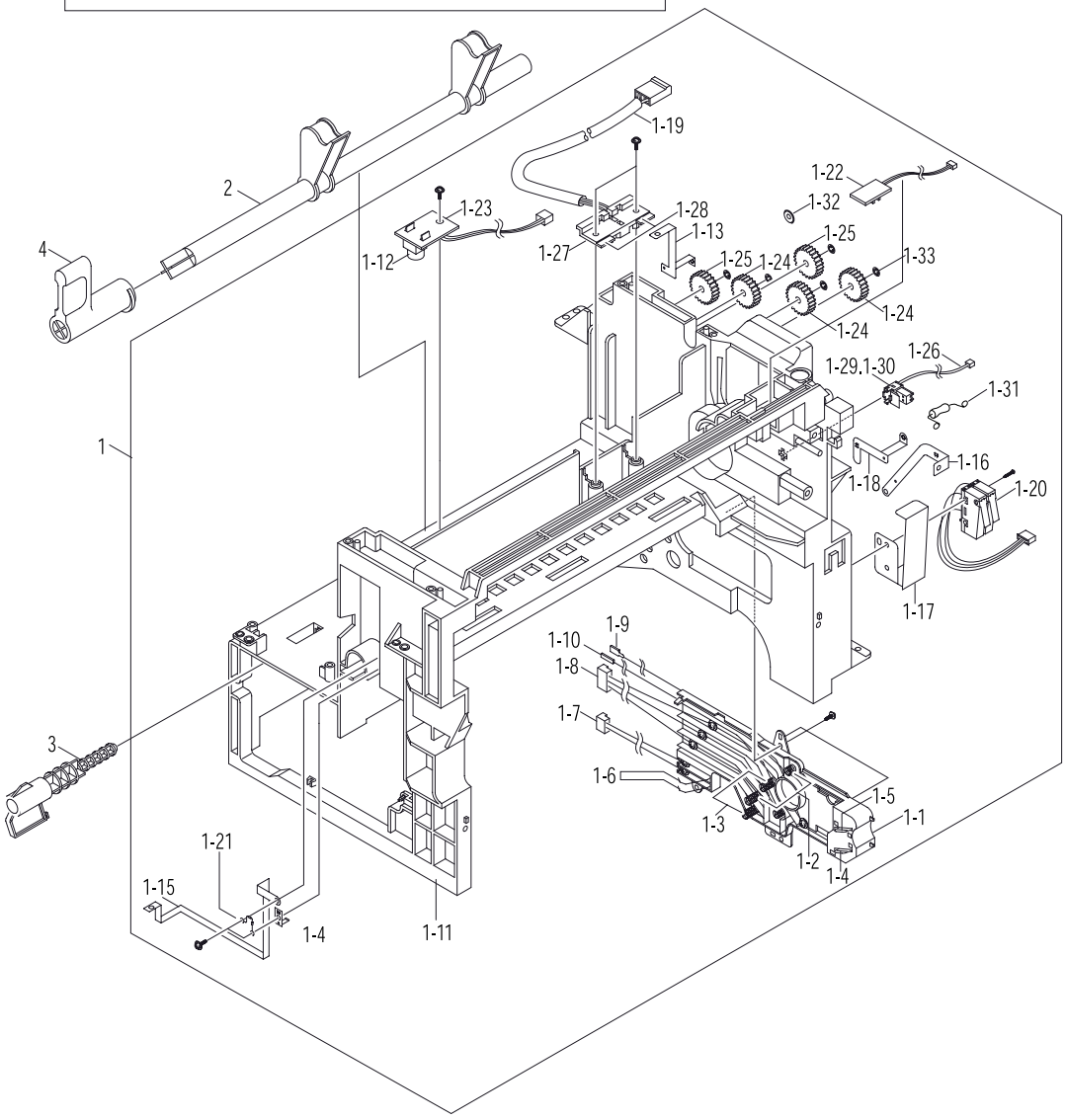

Перечень запасных частей узла главного шасси

(SA - доступность для технического обслуживания)

NO	DESCRIPTION	SEC CODE	Part Number	Q'TY	SA	REMARK
1	ELA HOU-FRAME MAIN ASS'Y	JC96-02184A	600N01743	1	O	
1-1	PMO-HOUSING TERMINAL	JC72-00802A	116N00227	1	O	
1-2	IPR-TERMINAL BLADE	JC70-00269A		2	X	
1-3	IPR-TERMINAL SUPPLY	JC70-00270A		2	X	
1-4	IPR-TERMINAL TR	JC70-00271A		1	X	
1-5	IPR-TERMINAL GND	JC70-00272A		1	X	
1-6	IPR-TERMINAL DEVE KEY	JC70-00273A		2	X	
1-7	CBF-HARNESS-DEV-ID	JC39-00166A		1	X	
1-8	CBF-HARNESS-BLADE+SUPPLY+DEV	JC39-00170A		5	X	
1-9	CBF-HARNESS-MAIN-THV WIRE	JC39-00168A		1	X	
1-10	CBF-HARNESS-MAIN-MHV WIRE	JC39-00169A		1	X	
1-11	PMO-FRAME MAIN	JC72-00800A		1	X	
1-12	PMO-LENS TONER SENSOR	JC72-00803A		2	X	
1-13	IPR-GND EXIT	JC70-00214A		1	X	
1-14	IPR-GND OPC	JC70-00216A		1	X	
1-15	IPR-GND OPC BASE	JC70-00217A		1	X	
1-16	IPR-GND FUSER	JC70-00215A		1	X	
1-17	IPR-GUARD C/O S/W	JC70-00218A		1	X	
1-18	IPR-GND TERMINAL	JC70-00219A		1	X	
1-19	CBF HARNESS-AC WIRE	JC39-00171A		1	X	
1-20	CBF-HARNESS;SWITCH-MICRO	JC81-00438A	110N01041	1	O	
1-21	CBF-HARNESS MOTOR	JB39-00017A		1	X	
1-22	PBA SUB-EXIT SENSOR	JC92-01364A	130N01205	1	O	
1-23	PBA SUB-TONER_RX	JC92-01360A	130N01208	1	O	
1-24	GEAR-EXIT/U,ID	JC66-40211B		3	X	
1-25	GEAR-EXIT,IDLE(Z17)	JC66-40964A		2	X	
1-26	CBF-HARNESS THERMISTOR_JOINT	JC39-00164A	011N00463	1	O	
1-27	PMO-HOUSING TERMINAL	JC72-41010A		1	X	
1-28	IPR-TERMINAL FU	JC70-10961A		2	X	
1-29	PMO-CAP CONNECTOR L	JC72-00463A	113N00364	1	O	
1-30	PMO-CAP CONNECTOR U	JC72-00465A	113N00365	1	O	
1-31	ELA HOU-MOTOR GND	JC96-01579A		1	X	
1-32	SPRING-CLUTCH	JB61-70922A		2	X	
1-33	RING-CS	6044-000001		5	X	
S	SCREW-TAPTITE,M3*8 BLACK,BINDER	6003-000119		17	X	
2	PMO-CAM JAM REMOVE	JC72-00799A	011N00465	1	O	
3	PMO-LOCKER DRIVE	JC72-00805A	007N01118	1	O	
4	PMO-LEVER JAM REMOVE	JC72-00804A	011N00465	1	O	

O : доступен для технического обслуживания; X : недоступен для технического обслуживания

6-12 Узел фьюзера

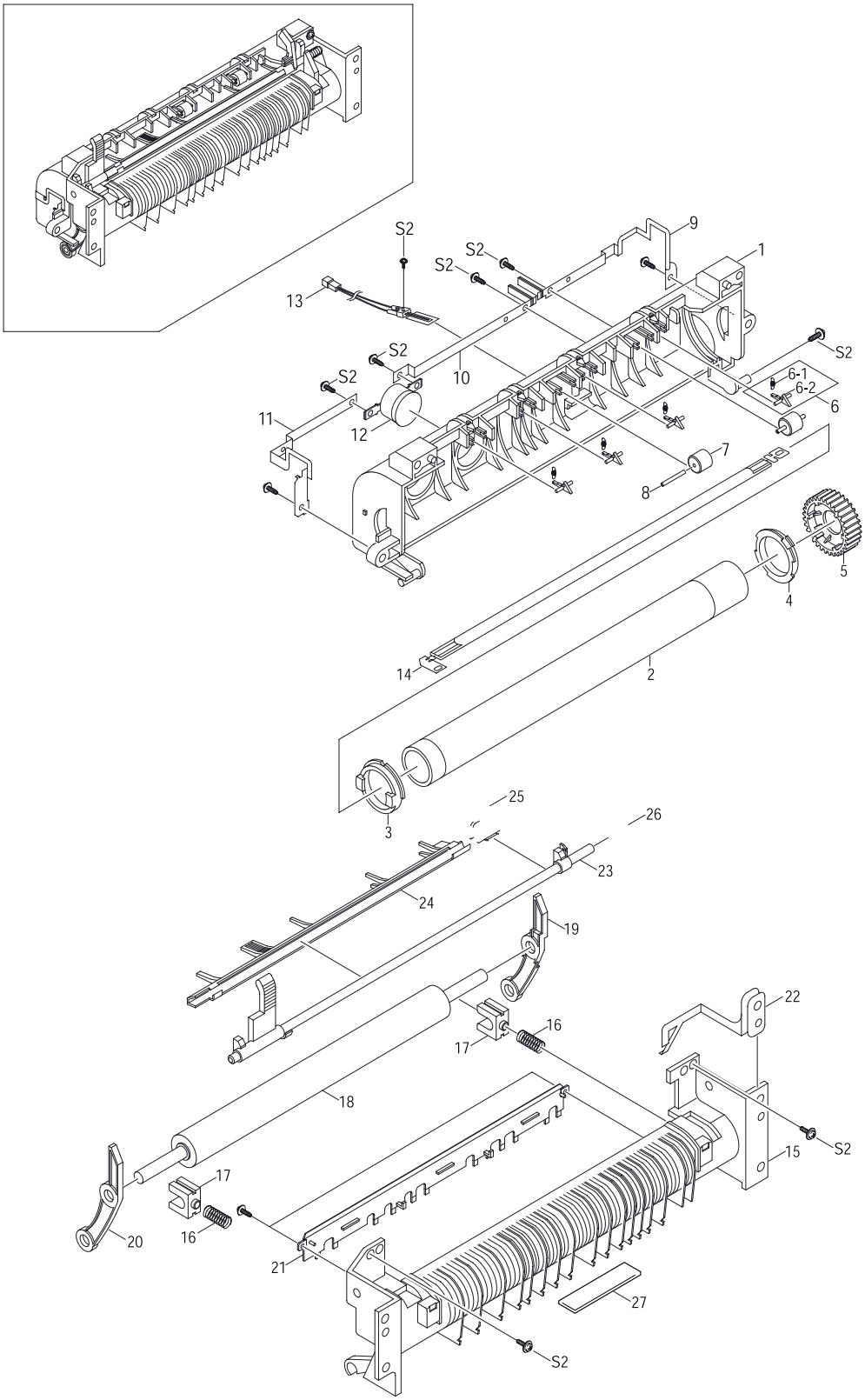

Перечень запасных частей узла фьюзера

(SA - доступность для технического обслуживания)

NO	DESCRIPTION	SEC CODE	Part Number	Q'TY	SA	REMARK
0	ELA HOU-FUSER(110V)ASS'Y	JC96-02194A	126N00182	1	O	110V
	ELA HOU-FUSER(220V)ASS'Y	JC96-02178A	126N00183	1	O	220V
1	PMO-UPPER FUSER	JC72-00812A		1	X	
2	RMO-ROLLER HEAT	JC73-00093A		1	X	
3	PMO-BEARING H/R-F	JC72-00814A		1	X	
4	BEARING-H/R L	JC66-10902A		1	X	
5	GEAR-FUSER	JC66-40913B	126N00184	1	O	
6	MEA UNIT-CLAW ASS'Y	JC97-01587A		1	X	
6-1	SPRING-SAPERATION	JC61-70909A		4	X	
6-2	PMO-GUIDE CLAW	JC72-00376A		4	X	
7	PEX-ROLLER EXIT F-UP	JC72-20901A		2	X	
8	IPR-PIN ROLLER EXIT	JC70-00064A		2	X	
9	NPR-ELECTRODE GEAR	JC71-00029A		1	X	
10	NPR-ELECTRODE M	JC71-00030A		1	X	
11	NPR-ELECTRODE F	JC71-00028A		1	X	
12	THERMOSTAT	4712-000001	130N01214	1	O	
13	THERMISTOR-FUSER	JC14-00001A	126N00185	1	O	
14	LAMP-HALOGEN (110V)	4713-001158	122N00208	1	O	110V
	LAMP-HALOGEN(220V)	4713-001157	122N00209	1	O	220V
15	PMO-LOWER FUSER	JC72-00820A		1	X	
16	SPRING-PR	JC61-70908A		1	X	
17	BEARING-PRESSURE/R	JC66-10901A		2	X	
18	RMO-ROLLER PRESSURE	JC73-00094A		1	X	
19	PMO-LEVER JAM R	JC72-00819A		1	X	
20	PMO-LEVER JAM F	JC72-00818A		1	X	
21	PMO-GUIDE INPUT	JC72-00817A		1	X	
22	IPR-GROUND FU	JC70-00259A		1	X	
23	MEA UNIT-ACTUATOR ASS'Y	JC97-01611A	120N00396	1	O	
24	SPRING-ACTUATOR	JC61-00485A		2	X	
25	LABEL(R)CAV_HOT.FU	JC68-30928A		1	X	
26	LABEL(R)-LV FUSER	JC68-00408A		1	X	110V
	LABEL(R)-HV FUSER	JC68-00407A		1	X	220V

O : доступен для технического обслуживания; X : недоступен для технического обслуживания

7. Перечни электрических элементов

7-1 Главная плата

CODE NO.	LOC NO.		DESCRIPTION	SPECIFICATION
0401-000116	D48	1	DIODE-SWITCHING	"MMSD914T1,100V,200mA,SOD-123,TP
0401-000116	D50	1	DIODE-SWITCHING	"MMSD914T1,100V,200mA,SOD-123,TP
0401-000116	D6	1	DIODE-SWITCHING	"MMSD914T1,100V,200mA,SOD-123,TP
0402-000129	D19	1	DIODE-RECTIFIER	"1N4003,200V,1A,DO-41,TP
0402-000129	D29	1	DIODE-RECTIFIER	"1N4003,200V,1A,DO-41,TP
0402-000129	D5	1	DIODE-RECTIFIER	"1N4003,200V,1A,DO-41,TP
0402-000129	D9	1	DIODE-RECTIFIER	"1N4003,200V,1A,DO-41,TP
0404-000112	D2	1	DIODE-SCHOTTKY	"RB420D,25V,100mA,SOT-23,TP
0404-000112	D8	1	DIODE-SCHOTTKY	"RB420D,25V,100mA,SOT-23,TP
0407-000101	D35	1	DIODE-ARRAY	"DA204K,20V,100mA,C2-3,SOT-23,T
0407-000101	D36	1	DIODE-ARRAY	"DA204K,20V,100mA,C2-3,SOT-23,T
0407-000101	D37	1	DIODE-ARRAY	"DA204K,20V,100mA,C2-3,SOT-23,T
0407-000101	D38	1	DIODE-ARRAY	"DA204K,20V,100mA,C2-3,SOT-23,T
0407-000101	D39	1	DIODE-ARRAY	"DA204K,20V,100mA,C2-3,SOT-23,T
0407-000101	D40	1	DIODE-ARRAY	"DA204K,20V,100mA,C2-3,SOT-23,T
0407-000101	D41	1	DIODE-ARRAY	"DA204K,20V,100mA,C2-3,SOT-23,T
0407-000101	D43	1	DIODE-ARRAY	"DA204K,20V,100mA,C2-3,SOT-23,T
0407-000101	D44	1	DIODE-ARRAY	"DA204K,20V,100mA,C2-3,SOT-23,T
0407-000101	D45	1	DIODE-ARRAY	"DA204K,20V,100mA,C2-3,SOT-23,T
0407-000101	D46	1	DIODE-ARRAY	"DA204K,20V,100mA,C2-3,SOT-23,T
0407-000101	D47	1	DIODE-ARRAY	"DA204K,20V,100mA,C2-3,SOT-23,T
0407-000101	D49	1	DIODE-ARRAY	"DA204K,20V,100mA,C2-3,SOT-23,T
0407-000101	D51	1	DIODE-ARRAY	"DA204K,20V,100mA,C2-3,SOT-23,T
0407-000101	D52	1	DIODE-ARRAY	"DA204K,20V,100mA,C2-3,SOT-23,T
0501-000010	Q19	1	TR-SMALL SIGNAL	"KSC1008,NPN,800mW,TO-92,TP,120-240
0501-000010	Q22	1	TR-SMALL SIGNAL	"KSC1008,NPN,800mW,TO-92,TP,120-240
0501-000279	Q21	1	TR-SMALL SIGNAL	"KSA1182-Y,PNP,150mW,SOT-23,TP,
0501-000338	Q1	1	TR-SMALL SIGNAL	"2SC2812,NPN,200mW,SOT-23,TP,20
0501-000338	Q10	1	TR-SMALL SIGNAL	"2SC2812,NPN,200mW,SOT-23,TP,20
0501-000338	Q11	1	TR-SMALL SIGNAL	"2SC2812,NPN,200mW,SOT-23,TP,20
0501-000338	Q18	1	TR-SMALL SIGNAL	"2SC2812,NPN,200mW,SOT-23,TP,20
0501-000338	Q20	1	TR-SMALL SIGNAL	"2SC2812,NPN,200mW,SOT-23,TP,20
0501-000338	Q23	1	TR-SMALL SIGNAL	"2SC2812,NPN,200mW,SOT-23,TP,20
0501-000338	Q24	1	TR-SMALL SIGNAL	"2SC2812,NPN,200mW,SOT-23,TP,20
0501-000338	Q26	1	TR-SMALL SIGNAL	"2SC2812,NPN,200mW,SOT-23,TP,20
0501-000338	Q3	1	TR-SMALL SIGNAL	"2SC2812,NPN,200mW,SOT-23,TP,20
0501-000338	Q5	1	TR-SMALL SIGNAL	"2SC2812,NPN,200mW,SOT-23,TP,20
0501-000338	Q6	1	TR-SMALL SIGNAL	"2SC2812,NPN,200mW,SOT-23,TP,20
0501-000338	Q7	1	TR-SMALL SIGNAL	"2SC2812,NPN,200mW,SOT-23,TP,20
0501-000338	Q8	1	TR-SMALL SIGNAL	"2SC2812,NPN,200mW,SOT-23,TP,20
0501-000338	Q9	1	TR-SMALL SIGNAL	"2SC2812,NPN,200mW,SOT-23,TP,20
0502-000245	Q12	1	TR-POWER	"KSB1151-Y,PNP,1.3W,TO-126,-,16
0502-000245	Q27	1	TR-POWER	"KSB1151-Y,PNP,1.3W,TO-126,-,16
0502-000245	Q4	1	TR-POWER	"KSB1151-Y,PNP,1.3W,TO-126,-,16
0502-001048	Q14	1	TR-POWER	"KSD1691,NPN,1.3W,TO-126,BK,160
0801-000379	U48	1	IC-CMOS LOGIC	"74HC00,NAND GATE,SOP,14P,150MI
0801-000454	U22	1	IC-CMOS LOGIC	"74HC74,D FLIP-FLOP,SOP,14P,150
0801-000477	U26	1	IC-CMOS LOGIC	"74HCT273,D FLIP-FLOP,SOP,20P,3
0801-000477	U27	1	IC-CMOS LOGIC	"74HCT273,D FLIP-FLOP,SOP,20P,3
0801-001055	U40	1	IC-CMOS LOGIC	"74VHC08,AND GATE,SOP,14P,150MI
0801-001055	U45	1	IC-CMOS LOGIC	"74VHC08,AND GATE,SOP,14P,150MI
0801-001056	U1	1	IC-CMOS LOGIC	"74VHC32,OR GATE,SOP,14P,150MIL
0801-001056	U2	1	IC-CMOS LOGIC	"74VHC32,OR GATE,SOP,14P,150MIL
0801-001056	U21	1	IC-CMOS LOGIC	"74VHC32,OR GATE,SOP,14P,150MIL
0801-001262	U10	1	IC-CMOS LOGIC	"74HC4060,BINARY COUNTER,DIP,16
0803-001040	U61	1	IC-TTL	"74LS14,SCHIMITT INVERTER,SOP,1
0803-001393	U3	1	IC-TTL	"7407,BUFFER/DRIVER,SOP,14P,150
1003-001102	U55	1	IC-MOTOR DRIVER	"TEA3718DP,DIP,16P,300MIL,SINGL
1003-001102	U57	1	IC-MOTOR DRIVER	“TEA3718DP,DIP,16P,300MIL,SINGL
1003-001102	U58	1	IC-MOTOR DRIVER	“TEA3718DP,DIP,16P,300MIL,SINGL
1003-001291	U59	1	IC-MOTOR DRIVER	“A2918SWH,DIP,18P,1220MIL,-,+-1.5A,ST,PLASTIC,F30
1006-000243	U33	1	IC-LINE TRANSCEIVER	"74ACT245,SOP,20P,-,OCTAL,ST,PL

CODE NO.	LOC NO		DESCRIPTION	SPECIFICATION
1006-000243	U34	1	IC-LINE TRANSCEIVER	"74ACT245,SOP,20P,-,OCTAL,ST,PL
1105-001241	U53	1	IC-DRAM	"4E641611,64M,4MX16BIT,TSOP,50P,400MIL,60NS,5V,10%
1105-001241	U54	1	IC-DRAM	"4E641611,64M,4MX16BIT,TSOP,50P,400MIL,60NS,5V,10%,
1106-001037	U11	1	IC-SRAM	"6T0808C1,256K,32KX8BIT,SOP,28P,450MIL,70NS,5V,10%,
1106-001384	U13	1	IC-SRAM	"6R1016,64KX16BIT,TSOP,44P,400MIL,15NS,5V,10%,
1107-001121	U14(L)	1	IC-FLASH MEMORY	"29F800,1Mx8/512Kx16Bit,TSOP,48P,787MIL,70nS,5V,10%,
1107-001121	U15(H)	1	IC-FLASH MEMORY	"29F800,1Mx8/512Kx16Bit,TSOP,48P,787MIL,70nS,5V,10%,
1107-001121	U19(L)	1	IC-FLASH MEMORY	"29F800,1Mx8/512Kx16Bit,TSOP,48P,787MIL,70nS,5V,10%,
1107-001121	U20(H)	1	IC-FLASH MEMORY	"29F800,1Mx8/512Kx16Bit,TSOP,48P,787MIL,70nS,5V,10%,
1201-001589	U7	1	IC-OP AMP	"15420,SOP,TP,8P,150MIL,DUAL,5.9dB,PLASTIC,14V,400mW,
1201-001589	U8	1	IC-OP AMP	"15420,SOP,TP,8P,150MIL,DUAL,5.9dB,PLASTIC,14V,400mW,
1201-001589	U9	1	IC-OP AMP	"15420,SOP,TP,8P,150MIL,DUAL,5.9dB,PLASTIC,14V,400mW,
1202-000164	U6	1	IC-VOLTAGE COMP.	"393,SOP,8P,150MIL,DUAL,36V,CMO
1203-000496	U49	1	IC-VOL. SUPERVISORY	"7705,SOP,8P,150MIL,PLASTIC,20V
1203-001455	U31	1	IC-POSI.FIXED REG.	"1117,DPAK,3P,265MIL,PLASTIC,3.
1203-001455	U60	1	IC-POSI.FIXED REG.	"1117,DPAK,3P,265MIL,PLASTIC,3.
1205-001771	U23	1	IC-CLOCK GENERATOR	"FS781BZB,SOP,8P,150MIL,PLASTIC,5.5V,37mW,0to+70C,TP,-
1205-001771	U69	1	IC-CLOCK GENERATOR	"FS781BZB,SOP,8P,150MIL,PLASTIC,5.5V,37mW,0to+70C,TP,-
2001-000015	R271	1	R-CARBON(S)	"0.5OHM,5%,1/2W,AA,TP,2.4X6.4MM
2001-000015	R272	1	R-CARBON(S)	"0.5OHM,5%,1/2W,AA,TP,2.4X6.4MM
2001-000015	R273	1	R-CARBON(S)	"0.5OHM,5%,1/2W,AA,TP,2.4X6.4MM
2001-000015	R274	1	R-CARBON(S)	"0.5OHM,5%,1/2W,AA,TP,2.4X6.4MM
2001-000016	R243	1	R-CARBON(S)	"1OHM,5%,1/2W,AA,TP,2.4X6.4MM
2005-000419	R292	1	"R-WIRE WOUND,NON	""0.33ohm,1%,1W,AA,TP,4.3x12mm
2005-000419	R293	1	"R-WIRE WOUND,NON	""0.33ohm,1%,1W,AA,TP,4.3x12mm
2007-000070	R128	1	R-CHIP	"0ohm,5%,1/16W,DA,TP,1608
2007-000070	R313	1	R-CHIP	"0ohm,5%,1/16W,DA,TP,1608
2007-000070	R343	1	R-CHIP	"0ohm,5%,1/16W,DA,TP,1608
2007-000070	R344	1	R-CHIP	"0ohm,5%,1/16W,DA,TP,1608
2007-000070	R345	1	R-CHIP	"0ohm,5%,1/16W,DA,TP,1608
2007-000070	R346	1	R-CHIP	"0ohm,5%,1/16W,DA,TP,1608
2007-000070	R347	1	R-CHIP	"0ohm,5%,1/16W,DA,TP,1608
2007-000070	R63	1	R-CHIP	"0ohm,5%,1/16W,DA,TP,1608
2007-000070	R64	1	R-CHIP	"0ohm,5%,1/16W,DA,TP,1608
2007-000070	R65	1	R-CHIP	"0ohm,5%,1/16W,DA,TP,1608
2007-000070	R66	1	R-CHIP	"0ohm,5%,1/16W,DA,TP,1608
2007-000070	R67	1	R-CHIP	"0ohm,5%,1/16W,DA,TP,1608
2007-000070	R68	1	R-CHIP	"0ohm,5%,1/16W,DA,TP,1608
2007-000074	R11	1	R-CHIP	"100ohm,5%,1/16W,DA,TP,1608
2007-000074	R110	1	R-CHIP	"100ohm,5%,1/16W,DA,TP,1608
2007-000074	R134	1	R-CHIP	"100ohm,5%,1/16W,DA,TP,1608
2007-000074	R15	1	R-CHIP	"100ohm,5%,1/16W,DA,TP,1608
2007-000074	R157	1	R-CHIP	"100ohm,5%,1/16W,DA,TP,1608
2007-000074	R203	1	R-CHIP	"100ohm,5%,1/16W,DA,TP,1608
2007-000074	R212	1	R-CHIP	"100ohm,5%,1/16W,DA,TP,1608
2007-000074	R250	1	R-CHIP	"100ohm,5%,1/16W,DA,TP,1608
2007-000074	R286	1	R-CHIP	"100ohm,5%,1/16W,DA,TP,1608
2007-000074	R334	1	R-CHIP	"100ohm,5%,1/16W,DA,TP,1608
2007-000074	R335	1	R-CHIP	"100ohm,5%,1/16W,DA,TP,1608
2007-000074	R342	1	R-CHIP	"100ohm,5%,1/16W,DA,TP,1608
2007-000074	R5	1	R-CHIP	"100ohm,5%,1/16W,DA,TP,1608
2007-000074	R50	1	R-CHIP	"100ohm,5%,1/16W,DA,TP,1608
2007-000074	R6	1	R-CHIP	"100ohm,5%,1/16W,DA,TP,1608
2007-000074	R62	1	R-CHIP	"100ohm,5%,1/16W,DA,TP,1608
2007-000074	R69	1	R-CHIP	"100ohm,5%,1/16W,DA,TP,1608
2007-000074	R7	1	R-CHIP	"100ohm,5%,1/16W,DA,TP,1608
2007-000074	R88	1	R-CHIP	"100ohm,5%,1/16W,DA,TP,1608
2007-000074	R89	1	R-CHIP	"100ohm,5%,1/16W,DA,TP,1608
2007-000074	R9	1	R-CHIP	"100ohm,5%,1/16W,DA,TP,1608
2007-000074	R90	1	R-CHIP	"100ohm,5%,1/16W,DA,TP,1608
2007-000074	R94	1	R-CHIP	"100ohm,5%,1/16W,DA,TP,1608
2007-000074	R95	1	R-CHIP	"100ohm,5%,1/16W,DA,TP,1608
2007-000077	R322	1	R-CHIP	"470ohm,5%,1/16W,DA,TP,1608
2007-000078	R131	1	R-CHIP	"1Kohm,5%,1/16W,DA,TP,1608
2007-000078	R150	1	R-CHIP	"1Kohm,5%,1/16W,DA,TP,1608

CODE NO.	LOC NO.		DESCRIPTION	SPECIFICATION
2007-000078	R151	1	R-CHIP	"1Kohm,5%,1/16W,DA,TP,1608
2007-000078	R154	1	R-CHIP	"1Kohm,5%,1/16W,DA,TP,1608
2007-000078	R166	1	R-CHIP	"1Kohm,5%,1/16W,DA,TP,1608
2007-000078	R17	1	R-CHIP	"1Kohm,5%,1/16W,DA,TP,1608
2007-000078	R198	1	R-CHIP	"1Kohm,5%,1/16W,DA,TP,1608
2007-000078	R20	1	R-CHIP	"1Kohm,5%,1/16W,DA,TP,1608
2007-000078	R221	1	R-CHIP	"1Kohm,5%,1/16W,DA,TP,1608
2007-000078	R258	1	R-CHIP	"1Kohm,5%,1/16W,DA,TP,1608
2007-000078	R259	1	R-CHIP	"1Kohm,5%,1/16W,DA,TP,1608
2007-000078	R260	1	R-CHIP	"1Kohm,5%,1/16W,DA,TP,1608
2007-000078	R261	1	R-CHIP	"1Kohm,5%,1/16W,DA,TP,1608
2007-000078	R262	1	R-CHIP	"1Kohm,5%,1/16W,DA,TP,1608
2007-000078	R263	1	R-CHIP	"1Kohm,5%,1/16W,DA,TP,1608
2007-000078	R264	1	R-CHIP	"1Kohm,5%,1/16W,DA,TP,1608
2007-000078	R298	1	R-CHIP	"1Kohm,5%,1/16W,DA,TP,1608
2007-000078	R299	1	R-CHIP	"1Kohm,5%,1/16W,DA,TP,1608
2007-000078	R323	1	R-CHIP	"1Kohm,5%,1/16W,DA,TP,1608
2007-000078	R324	1	R-CHIP	"1Kohm,5%,1/16W,DA,TP,1608
2007-000078	R325	1	R-CHIP	"1Kohm,5%,1/16W,DA,TP,1608
2007-000078	R326	1	R-CHIP	"1Kohm,5%,1/16W,DA,TP,1608
2007-000078	R327	1	R-CHIP	"1Kohm,5%,1/16W,DA,TP,1608
2007-000078	R75	1	R-CHIP	"1Kohm,5%,1/16W,DA,TP,1608
2007-000078	R76	1	R-CHIP	"1Kohm,5%,1/16W,DA,TP,1608
2007-000082	R133	1	R-CHIP	"3.3Kohm,5%,1/16W,DA,TP,1608
2007-000082	R294	1	R-CHIP	"3.3Kohm,5%,1/16W,DA,TP,1608
2007-000082	R341	1	R-CHIP	"3.3Kohm,5%,1/16W,DA,TP,1608
2007-000084	R16	1	R-CHIP	"4.7Kohm,5%,1/16W,DA,TP,1608
2007-000084	R18	1	R-CHIP	"4.7Kohm,5%,1/16W,DA,TP,1608
2007-000084	R287	1	R-CHIP	"4.7Kohm,5%,1/16W,DA,TP,1608
2007-000084	R300	1	R-CHIP	"4.7Kohm,5%,1/16W,DA,TP,1608
2007-000084	R357	1	R-CHIP	"4.7Kohm,5%,1/16W,DA,TP,1608
2007-000084	R358	1	R-CHIP	"4.7Kohm,5%,1/16W,DA,TP,1608
2007-000084	R362	1	R-CHIP	"4.7Kohm,5%,1/16W,DA,TP,1608
2007-000084	R37	1	R-CHIP	"4.7Kohm,5%,1/16W,DA,TP,1608
2007-000084	R38	1	R-CHIP	"4.7Kohm,5%,1/16W,DA,TP,1608
2007-000084	R39	1	R-CHIP	"4.7Kohm,5%,1/16W,DA,TP,1608
2007-000084	R40	1	R-CHIP	"4.7Kohm,5%,1/16W,DA,TP,1608
2007-000084	R41	1	R-CHIP	"4.7Kohm,5%,1/16W,DA,TP,1608
2007-000084	R42	1	R-CHIP	"4.7Kohm,5%,1/16W,DA,TP,1608
2007-000084	R58	1	R-CHIP	"4.7Kohm,5%,1/16W,DA,TP,1608
2007-000084	R59	1	R-CHIP	"4.7Kohm,5%,1/16W,DA,TP,1608
2007-000086	R141	1	R-CHIP	"5.6Kohm,5%,1/16W,DA,TP,1608
2007-000086	R239	1	R-CHIP	"5.6Kohm,5%,1/16W,DA,TP,1608
2007-000086	R251	1	R-CHIP	"5.6Kohm,5%,1/16W,DA,TP,1608
2007-000086	R253	1	R-CHIP	"5.6Kohm,5%,1/16W,DA,TP,1608
2007-000086	R30	1	R-CHIP	"5.6Kohm,5%,1/16W,DA,TP,1608
2007-000086	R354	1	R-CHIP	"5.6Kohm,5%,1/16W,DA,TP,1608
2007-000086	R355	1	R-CHIP	"5.6Kohm,5%,1/16W,DA,TP,1608
2007-000086	R80	1	R-CHIP	"5.6Kohm,5%,1/16W,DA,TP,1608
2007-000090	R102	1	R-CHIP	"10KOHM,5%,1/16W,DA,TP,1608
2007-000090	R103	1	R-CHIP	"10KOHM,5%,1/16W,DA,TP,1608
2007-000090	R108	1	R-CHIP	"10KOHM,5%,1/16W,DA,TP,1608
2007-000090	R120	1	R-CHIP	"10KOHM,5%,1/16W,DA,TP,1608
2007-000090	R121	1	R-CHIP	"10KOHM,5%,1/16W,DA,TP,1608
2007-000090	R130	1	R-CHIP	"10KOHM,5%,1/16W,DA,TP,1608
2007-000090	R135	1	R-CHIP	"10KOHM,5%,1/16W,DA,TP,1608
2007-000090	R162	1	R-CHIP	"10KOHM,5%,1/16W,DA,TP,1608
2007-000090	R163	1	R-CHIP	"10KOHM,5%,1/16W,DA,TP,1608
2007-000090	R164	1	R-CHIP	"10KOHM,5%,1/16W,DA,TP,1608
2007-000090	R165	1	R-CHIP	"10KOHM,5%,1/16W,DA,TP,1608
2007-000090	R2	1	R-CHIP	"10KOHM,5%,1/16W,DA,TP,1608
2007-000090	R218	1	R-CHIP	"10KOHM,5%,1/16W,DA,TP,1608
2007-000090	R219	1	R-CHIP	"10KOHM,5%,1/16W,DA,TP,1608
2007-000090	R220	1	R-CHIP	"10KOHM,5%,1/16W,DA,TP,1608
2007-000090	R222	1	R-CHIP	"10KOHM,5%,1/16W,DA,TP,1608
2007-000090	R28	1	R-CHIP	"10KOHM,5%,1/16W,DA,TP,1608

CODE NO.	LOC NO.		DESCRIPTION	SPECIFICATION
2007-000090	R283	1	R-CHIP	"10KOHM,5%,1/16W,DA,TP,1608
2007-000090	R284	1	R-CHIP	"10KOHM,5%,1/16W,DA,TP,1608
2007-000090	R285	1	R-CHIP	"10KOHM,5%,1/16W,DA,TP,1608
2007-000090	R295	1	R-CHIP	"10KOHM,5%,1/16W,DA,TP,1608
2007-000090	R3	1	R-CHIP	"10KOHM,5%,1/16W,DA,TP,1608
2007-000090	R302	1	R-CHIP	"10KOHM,5%,1/16W,DA,TP,1608
2007-000090	R32	1	R-CHIP	"10KOHM,5%,1/16W,DA,TP,1608
2007-000090	R33	1	R-CHIP	"10KOHM,5%,1/16W,DA,TP,1608
2007-000090	R330	1	R-CHIP	"10KOHM,5%,1/16W,DA,TP,1608
2007-000090	R333	1	R-CHIP	"10KOHM,5%,1/16W,DA,TP,1608
2007-000090	R340	1	R-CHIP	"10KOHM,5%,1/16W,DA,TP,1608
2007-000090	R4	1	R-CHIP	"10KOHM,5%,1/16W,DA,TP,1608
2007-000090	R46	1	R-CHIP	"10KOHM,5%,1/16W,DA,TP,1608
2007-000090	R47	1	R-CHIP	"10KOHM,5%,1/16W,DA,TP,1608
2007-000090	R54	1	R-CHIP	"10KOHM,5%,1/16W,DA,TP,1608
2007-000090	R60	1	R-CHIP	"10KOHM,5%,1/16W,DA,TP,1608
2007-000090	R61	1	R-CHIP	"10KOHM,5%,1/16W,DA,TP,1608
2007-000090	R84	1	R-CHIP	"10KOHM,5%,1/16W,DA,TP,1608
2007-000090	R85	1	R-CHIP	"10KOHM,5%,1/16W,DA,TP,1608
2007-000091	R356	1	R-CHIP	"12Kohm,5%,1/16W,DA,TP,1608
2007-000094	R8	1	R-CHIP	"22Kohm,5%,1/16W,DA,TP,1608
2007-000097	R1	1	R-CHIP	"47Kohm,5%,1/16W,DA,TP,1608
2007-000097	R107	1	R-CHIP	"47Kohm,5%,1/16W,DA,TP,1608
2007-000097	R12	1	R-CHIP	"47Kohm,5%,1/16W,DA,TP,1608
2007-000097	R144	1	R-CHIP	"47Kohm,5%,1/16W,DA,TP,1608
2007-000097	R156	1	R-CHIP	"47Kohm,5%,1/16W,DA,TP,1608
2007-000097	R183	1	R-CHIP	"47Kohm,5%,1/16W,DA,TP,1608
2007-000097	R193	1	R-CHIP	"47Kohm,5%,1/16W,DA,TP,1608
2007-000097	R195	1	R-CHIP	"47Kohm,5%,1/16W,DA,TP,1608
2007-000097	R211	1	R-CHIP	"47Kohm,5%,1/16W,DA,TP,1608
2007-000097	R249	1	R-CHIP	"47Kohm,5%,1/16W,DA,TP,1608
2007-000097	R336	1	R-CHIP	"47Kohm,5%,1/16W,DA,TP,1608
2007-000097	R70	1	R-CHIP	"47Kohm,5%,1/16W,DA,TP,1608
2007-000097	R74	1	R-CHIP	"47Kohm,5%,1/16W,DA,TP,1608
2007-000097	R79	1	R-CHIP	"47Kohm,5%,1/16W,DA,TP,1608
2007-000098	R277	1	R-CHIP	"56Kohm,5%,1/16W,DA,TP,1608
2007-000098	R278	1	R-CHIP	"56Kohm,5%,1/16W,DA,TP,1608
2007-000098	R279	1	R-CHIP	"56Kohm,5%,1/16W,DA,TP,1608
2007-000098	R280	1	R-CHIP	"56Kohm,5%,1/16W,DA,TP,1608
2007-000098	R296	1	R-CHIP	"56Kohm,5%,1/16W,DA,TP,1608
2007-000098	R297	1	R-CHIP	"56Kohm,5%,1/16W,DA,TP,1608
2007-000102	R104	1	R-CHIP	"100Kohm,5%,1/16W,DA,TP,1608
2007-000106	R256	1	R-CHIP	"220Kohm,5%,1/16W,DA,TP,1608
2007-000109	R44	1	R-CHIP	"1Mohm,5%,1/16W,DA,TP,1608
2007-000113	R111	1	R-CHIP	"33ohm,5%,1/16W,DA,TP,1608
2007-000113	R113	1	R-CHIP	"33ohm,5%,1/16W,DA,TP,1608
2007-000113	R123	1	R-CHIP	"33ohm,5%,1/16W,DA,TP,1608
2007-000113	R124	1	R-CHIP	"33ohm,5%,1/16W,DA,TP,1608
2007-000113	R127	1	R-CHIP	"33ohm,5%,1/16W,DA,TP,1608
2007-000113	R146	1	R-CHIP	"33ohm,5%,1/16W,DA,TP,1608
2007-000113	R182	1	R-CHIP	"33ohm,5%,1/16W,DA,TP,1608
2007-000113	R184	1	R-CHIP	"33ohm,5%,1/16W,DA,TP,1608
2007-000113	R186	1	R-CHIP	"33ohm,5%,1/16W,DA,TP,1608
2007-000113	R196	1	R-CHIP	"33ohm,5%,1/16W,DA,TP,1608
2007-000113	R207	1	R-CHIP	"33ohm,5%,1/16W,DA,TP,1608
2007-000113	R209	1	R-CHIP	"33ohm,5%,1/16W,DA,TP,1608
2007-000113	R210	1	R-CHIP	"33ohm,5%,1/16W,DA,TP,1608
2007-000113	R23	1	R-CHIP	"33ohm,5%,1/16W,DA,TP,1608
2007-000113	R238	1	R-CHIP	"33ohm,5%,1/16W,DA,TP,1608
2007-000113	R24	1	R-CHIP	"33ohm,5%,1/16W,DA,TP,1608
2007-000113	R25	1	R-CHIP	"33ohm,5%,1/16W,DA,TP,1608
2007-000113	R26	1	R-CHIP	"33ohm,5%,1/16W,DA,TP,1608
2007-000113	R27	1	R-CHIP	"33ohm,5%,1/16W,DA,TP,1608
2007-000113	R301	1	R-CHIP	"33ohm,5%,1/16W,DA,TP,1608
2007-000113	R339	1	R-CHIP	"33ohm,5%,1/16W,DA,TP,1608
2007-000113	R71	1	R-CHIP	"33ohm,5%,1/16W,DA,TP,1608

CODE NO.	LOC NO.		DESCRIPTION	SPECIFICATION
2007-000113	R72	1	R-CHIP	"33ohm,5%,1/16W,DA,TP,1608
2007-000120	R10	1	R-CHIP	"680ohm,5%,1/16W,DA,TP,1608
2007-000121	R86	1	R-CHIP	"820ohm,5%,1/16W,DA,TP,1608
2007-000123	R116	1	R-CHIP	"1.5Kohm,5%,1/16W,DA,TP,1608
2007-000123	R257	1	R-CHIP	"1.5Kohm,5%,1/16W,DA,TP,1608
2007-000124	R45	1	R-CHIP	"2.2Kohm,5%,1/16W,DA,TP,1608
2007-000124	R81	1	R-CHIP	"2.2Kohm,5%,1/16W,DA,TP,1608
2007-000132	R255	1	R-CHIP	"180Kohm,5%,1/16W,DA,TP,1608
2007-000134	R291	1	R-CHIP	"33Kohm,5%,1/16W,DA,TP,1608
2007-000134	R31	1	R-CHIP	"33Kohm,5%,1/16W,DA,TP,1608
2007-000223	R252	1	R-CHIP	"1.2KOHM,5%,1/8W,DA,TP,3216
2007-000265	R29	1	R-CHIP	"1.8Kohm,1%,1/16W,DA,TP,1608
2007-000309	R317	1	R-CHIP	"10ohm,5%,1/16W,DA,TP,1608
2007-000309	R318	1	R-CHIP	"10ohm,5%,1/16W,DA,TP,1608
2007-000309	R319	1	R-CHIP	"10ohm,5%,1/16W,DA,TP,1608
2007-000312	R153	1	R-CHIP	"10OHM,5%,1/8W,DA,TP,3216
2007-000402	R175	1	R-CHIP	"150ohm,5%,1/16W,DA,TP,1608
2007-000683	R43	1	R-CHIP	"3.3Kohm,1%,1/16W,DA,TP,1608
2007-000708	R53	1	R-CHIP	"3.9Kohm,1%,1/16W,DA,TP,1608
2007-000839	R303	1	R-CHIP	"39ohm,5%,1/16W,DA,TP,1608
2007-000839	R304	1	R-CHIP	"39ohm,5%,1/16W,DA,TP,1608
2007-000839	R305	1	R-CHIP	"39ohm,5%,1/16W,DA,TP,1608
2007-000839	R306	1	R-CHIP	"39ohm,5%,1/16W,DA,TP,1608
2007-000839	R307	1	R-CHIP	"39ohm,5%,1/16W,DA,TP,1608
2007-000839	R308	1	R-CHIP	"39ohm,5%,1/16W,DA,TP,1608
2007-000839	R309	1	R-CHIP	"39ohm,5%,1/16W,DA,TP,1608
2007-000839	R310	1	R-CHIP	"39ohm,5%,1/16W,DA,TP,1608
2007-000839	R311	1	R-CHIP	"39ohm,5%,1/16W,DA,TP,1608
2007-000965	R236	1	R-CHIP	"5.1Kohm,5%,1/16W,DA,TP,1608
2007-001002	R140	1	R-CHIP	"510ohm,5%,1/16W,DA,TP,1608
2007-001002	R199	1	R-CHIP	"510ohm,5%,1/16W,DA,TP,1608
2007-001002	R237	1	R-CHIP	"510ohm,5%,1/16W,DA,TP,1608
2007-001002	R244	1	R-CHIP	"510ohm,5%,1/16W,DA,TP,1608
2007-001002	R288	1	R-CHIP	"510ohm,5%,1/16W,DA,TP,1608
2007-001002	R289	1	R-CHIP	"510ohm,5%,1/16W,DA,TP,1608
2007-001002	R290	1	R-CHIP	"510ohm,5%,1/16W,DA,TP,1608
2007-001002	R328	1	R-CHIP	"510ohm,5%,1/16W,DA,TP,1608
2007-001002	R56	1	R-CHIP	"510ohm,5%,1/16W,DA,TP,1608
2007-001134	R197	1	R-CHIP	"68ohm,5%,1/16W,DA,TP,1608
2007-001134	R77	1	R-CHIP	"68ohm,5%,1/16W,DA,TP,1608
2007-002768	R52	1	R-CHIP	"6.2Kohm,1%,1/16W,DA,TP,1608
2011-001093	RA21	1	R-NETWORK	"100ohm,5%,1/16W,L,CHIP,8P,TP
2011-001093	RA22	1	R-NETWORK	"100ohm,5%,1/16W,L,CHIP,8P,TP
2011-001093	RA23	1	R-NETWORK	"100ohm,5%,1/16W,L,CHIP,8P,TP
2011-001094	RA1	1	R-NETWORK	"39ohm,5%,63mW,L,CHIP,8P,TP
2011-001094	RA10	1	R-NETWORK	"39ohm,5%,63mW,L,CHIP,8P,TP
2011-001094	RA11	1	R-NETWORK	"39ohm,5%,63mW,L,CHIP,8P,TP
2011-001094	RA12	1	R-NETWORK	"39ohm,5%,63mW,L,CHIP,8P,TP
2011-001094	RA13	1	R-NETWORK	"39ohm,5%,63mW,L,CHIP,8P,TP
2011-001094	RA14	1	R-NETWORK	"39ohm,5%,63mW,L,CHIP,8P,TP
2011-001094	RA15	1	R-NETWORK	"39ohm,5%,63mW,L,CHIP,8P,TP
2011-001094	RA16	1	R-NETWORK	"39ohm,5%,63mW,L,CHIP,8P,TP
2011-001094	RA17	1	R-NETWORK	"39ohm,5%,63mW,L,CHIP,8P,TP
2011-001094	RA18	1	R-NETWORK	"39ohm,5%,63mW,L,CHIP,8P,TP
2011-001094	RA19	1	R-NETWORK	"39ohm,5%,63mW,L,CHIP,8P,TP
2011-001094	RA2	1	R-NETWORK	"39ohm,5%,63mW,L,CHIP,8P,TP
2011-001094	RA20	1	R-NETWORK	"39ohm,5%,63mW,L,CHIP,8P,TP
2011-001094	RA3	1	R-NETWORK	"39ohm,5%,63mW,L,CHIP,8P,TP
2011-001094	RA4	1	R-NETWORK	"39ohm,5%,63mW,L,CHIP,8P,TP
2011-001094	RA5	1	R-NETWORK	"39ohm,5%,63mW,L,CHIP,8P,TP
2011-001094	RA6	1	R-NETWORK	"39ohm,5%,63mW,L,CHIP,8P,TP
2011-001094	RA7	1	R-NETWORK	"39ohm,5%,63mW,L,CHIP,8P,TP
2011-001094	RA8	1	R-NETWORK	"39ohm,5%,63mW,L,CHIP,8P,TP
2011-001094	RA9	1	R-NETWORK	"39ohm,5%,63mW,L,CHIP,8P,TP
2011-001334	U25	1	RC-NETWORK	"1K/5.1K/39ohm,10%,150pF,-,6V,28P
2203-000189	C101	1	"C-CERAMIC,CHIP	""100nF,+80-20%,25V,Y5V,TP,1608,

CODE NO.	LOC NO.		DESCRIPTION	SPECIFICATION
2203-000189	C102	1	"C-CERAMIC,CHIP	""100nF,+80-20%,25V,Y5V,TP,1608,
2203-000189	C104	1	"C-CERAMIC,CHIP	""100nF,+80-20%,25V,Y5V,TP,1608,
2203-000189	C107	1	"C-CERAMIC,CHIP	""100nF,+80-20%,25V,Y5V,TP,1608,
2203-000189	C109	1	"C-CERAMIC,CHIP	""100nF,+80-20%,25V,Y5V,TP,1608,
2203-000189	C110	1	"C-CERAMIC,CHIP	""100nF,+80-20%,25V,Y5V,TP,1608,
2203-000189	C111	1	"C-CERAMIC,CHIP	""100nF,+80-20%,25V,Y5V,TP,1608,
2203-000189	C112	1	"C-CERAMIC,CHIP	""100nF,+80-20%,25V,Y5V,TP,1608,
2203-000189	C113	1	"C-CERAMIC,CHIP	""100nF,+80-20%,25V,Y5V,TP,1608,
2203-000189	C116	1	"C-CERAMIC,CHIP	""100nF,+80-20%,25V,Y5V,TP,1608,
2203-000189	C118	1	"C-CERAMIC,CHIP	""100nF,+80-20%,25V,Y5V,TP,1608,
2203-000189	C121	1	"C-CERAMIC,CHIP	""100nF,+80-20%,25V,Y5V,TP,1608,
2203-000189	C122	1	"C-CERAMIC,CHIP	""100nF,+80-20%,25V,Y5V,TP,1608,
2203-000189	C124	1	"C-CERAMIC,CHIP	""100nF,+80-20%,25V,Y5V,TP,1608,
2203-000189	C125	1	"C-CERAMIC,CHIP	""100nF,+80-20%,25V,Y5V,TP,1608,
2203-000189	C126	1	"C-CERAMIC,CHIP	""100nF,+80-20%,25V,Y5V,TP,1608,
2203-000189	C128	1	"C-CERAMIC,CHIP	""100nF,+80-20%,25V,Y5V,TP,1608,
2203-000189	C129	1	"C-CERAMIC,CHIP	""100nF,+80-20%,25V,Y5V,TP,1608,
2203-000189	C132	1	"C-CERAMIC,CHIP	""100nF,+80-20%,25V,Y5V,TP,1608,
2203-000189	C133	1	"C-CERAMIC,CHIP	""100nF,+80-20%,25V,Y5V,TP,1608,
2203-000189	C138	1	"C-CERAMIC,CHIP	""100nF,+80-20%,25V,Y5V,TP,1608,
2203-000189	C139	1	"C-CERAMIC,CHIP	""100nF,+80-20%,25V,Y5V,TP,1608,
2203-000189	C141	1	"C-CERAMIC,CHIP	""100nF,+80-20%,25V,Y5V,TP,1608,
2203-000189	C142	1	"C-CERAMIC,CHIP	""100nF,+80-20%,25V,Y5V,TP,1608,
2203-000189	C143	1	"C-CERAMIC,CHIP	""100nF,+80-20%,25V,Y5V,TP,1608,
2203-000189	C144	1	"C-CERAMIC,CHIP	""100nF,+80-20%,25V,Y5V,TP,1608,
2203-000189	C145	1	"C-CERAMIC,CHIP	""100nF,+80-20%,25V,Y5V,TP,1608,
2203-000189	C146	1	"C-CERAMIC,CHIP	""100nF,+80-20%,25V,Y5V,TP,1608,
2203-000189	C147	1	"C-CERAMIC,CHIP	""100nF,+80-20%,25V,Y5V,TP,1608,
2203-000189	C149	1	"C-CERAMIC,CHIP	""100nF,+80-20%,25V,Y5V,TP,1608,
2203-000189	C155	1	"C-CERAMIC,CHIP	""100nF,+80-20%,25V,Y5V,TP,1608,
2203-000189	C156	1	"C-CERAMIC,CHIP	""100nF,+80-20%,25V,Y5V,TP,1608,
2203-000189	C16	1	"C-CERAMIC,CHIP	""100nF,+80-20%,25V,Y5V,TP,1608,
2203-000189	C161	1	"C-CERAMIC,CHIP	""100nF,+80-20%,25V,Y5V,TP,1608,
2203-000189	C162	1	"C-CERAMIC,CHIP	""100nF,+80-20%,25V,Y5V,TP,1608,
2203-000189	C163	1	"C-CERAMIC,CHIP	""100nF,+80-20%,25V,Y5V,TP,1608,
2203-000189	C164	1	"C-CERAMIC,CHIP	""100nF,+80-20%,25V,Y5V,TP,1608,
2203-000189	C165	1	"C-CERAMIC,CHIP	""100nF,+80-20%,25V,Y5V,TP,1608,
2203-000189	C166	1	"C-CERAMIC,CHIP	""100nF,+80-20%,25V,Y5V,TP,1608,
2203-000189	C167	1	"C-CERAMIC,CHIP	""100nF,+80-20%,25V,Y5V,TP,1608,
2203-000189	C168	1	"C-CERAMIC,CHIP	""100nF,+80-20%,25V,Y5V,TP,1608,
2203-000189	C169	1	"C-CERAMIC,CHIP	""100nF,+80-20%,25V,Y5V,TP,1608,
2203-000189	C170	1	"C-CERAMIC,CHIP	""100nF,+80-20%,25V,Y5V,TP,1608,
2203-000189	C171	1	"C-CERAMIC,CHIP	""100nF,+80-20%,25V,Y5V,TP,1608,
2203-000189	C172	1	"C-CERAMIC,CHIP	""100nF,+80-20%,25V,Y5V,TP,1608,
2203-000189	C173	1	"C-CERAMIC,CHIP	""100nF,+80-20%,25V,Y5V,TP,1608,
2203-000189	C174	1	"C-CERAMIC,CHIP	""100nF,+80-20%,25V,Y5V,TP,1608,
2203-000189	C176	1	"C-CERAMIC,CHIP	""100nF,+80-20%,25V,Y5V,TP,1608,
2203-000189	C177	1	"C-CERAMIC,CHIP	""100nF,+80-20%,25V,Y5V,TP,1608,
2203-000189	C179	1	"C-CERAMIC,CHIP	""100nF,+80-20%,25V,Y5V,TP,1608,
2203-000189	C18	1	"C-CERAMIC,CHIP	""100nF,+80-20%,25V,Y5V,TP,1608,
2203-000189	C184	1	"C-CERAMIC,CHIP	""100nF,+80-20%,25V,Y5V,TP,1608,
2203-000189	C185	1	"C-CERAMIC,CHIP	""100nF,+80-20%,25V,Y5V,TP,1608,
2203-000189	C188	1	"C-CERAMIC,CHIP	""100nF,+80-20%,25V,Y5V,TP,1608,
2203-000189	C190	1	"C-CERAMIC,CHIP	""100nF,+80-20%,25V,Y5V,TP,1608,
2203-000189	C192	1	"C-CERAMIC,CHIP	""100nF,+80-20%,25V,Y5V,TP,1608,
2203-000189	C194	1	"C-CERAMIC,CHIP	""100nF,+80-20%,25V,Y5V,TP,1608,
2203-000189	C195	1	"C-CERAMIC,CHIP	""100nF,+80-20%,25V,Y5V,TP,1608,
2203-000189	C204	1	"C-CERAMIC,CHIP	""100nF,+80-20%,25V,Y5V,TP,1608,
2203-000189	C209	1	"C-CERAMIC,CHIP	""100nF,+80-20%,25V,Y5V,TP,1608,
2203-000189	C210	1	"C-CERAMIC,CHIP	""100nF,+80-20%,25V,Y5V,TP,1608,
2203-000189	C211	1	"C-CERAMIC,CHIP	""100nF,+80-20%,25V,Y5V,TP,1608,
2203-000189	C212	1	"C-CERAMIC,CHIP	""100nF,+80-20%,25V,Y5V,TP,1608,
2203-000189	C213	1	"C-CERAMIC,CHIP	""100nF,+80-20%,25V,Y5V,TP,1608,
2203-000189	C215	1	"C-CERAMIC,CHIP	""100nF,+80-20%,25V,Y5V,TP,1608,
2203-000189	C22	1	"C-CERAMIC,CHIP	""100nF,+80-20%,25V,Y5V,TP,1608,
2203-000189	C227	1	"C-CERAMIC,CHIP	""100nF,+80-20%,25V,Y5V,TP,1608,

CODE NO.	LOC NO.		DESCRIPTION	SPECIFICATION
2203-000189	C228	1	"C-CERAMIC,CHIP	""100nF,+80-20%,25V,Y5V,TP,1608,
2203-000189	C229	1	"C-CERAMIC,CHIP	""100nF,+80-20%,25V,Y5V,TP,1608,
2203-000189	C236	1	"C-CERAMIC,CHIP	""100nF,+80-20%,25V,Y5V,TP,1608,
2203-000189	C237	1	"C-CERAMIC,CHIP	""100nF,+80-20%,25V,Y5V,TP,1608,
2203-000189	C242	1	"C-CERAMIC,CHIP	""100nF,+80-20%,25V,Y5V,TP,1608,
2203-000189	C243	1	"C-CERAMIC,CHIP	""100nF,+80-20%,25V,Y5V,TP,1608,
2203-000189	C245	1	"C-CERAMIC,CHIP	""100nF,+80-20%,25V,Y5V,TP,1608,
2203-000189	C246	1	"C-CERAMIC,CHIP	""100nF,+80-20%,25V,Y5V,TP,1608,
2203-000189	C251	1	"C-CERAMIC,CHIP	""100nF,+80-20%,25V,Y5V,TP,1608,
2203-000189	C26	1	"C-CERAMIC,CHIP	""100nF,+80-20%,25V,Y5V,TP,1608,
2203-000189	C264	1	"C-CERAMIC,CHIP	""100nF,+80-20%,25V,Y5V,TP,1608,
2203-000189	C265	1	"C-CERAMIC,CHIP	""100nF,+80-20%,25V,Y5V,TP,1608,
2203-000189	C270	1	"C-CERAMIC,CHIP	""100nF,+80-20%,25V,Y5V,TP,1608,
2203-000189	C282	1	"C-CERAMIC,CHIP	""100nF,+80-20%,25V,Y5V,TP,1608,
2203-000189	C294	1	"C-CERAMIC,CHIP	""100nF,+80-20%,25V,Y5V,TP,1608,
2203-000189	C296	1	"C-CERAMIC,CHIP	""100nF,+80-20%,25V,Y5V,TP,1608,
2203-000189	C298	1	"C-CERAMIC,CHIP	""100nF,+80-20%,25V,Y5V,TP,1608,
2203-000189	C300	1	"C-CERAMIC,CHIP	""100nF,+80-20%,25V,Y5V,TP,1608,
2203-000189	C31	1	"C-CERAMIC,CHIP	""100nF,+80-20%,25V,Y5V,TP,1608,
2203-000189	C332	1	"C-CERAMIC,CHIP	""100nF,+80-20%,25V,Y5V,TP,1608,
2203-000189	C336	1	"C-CERAMIC,CHIP	""100nF,+80-20%,25V,Y5V,TP,1608,
2203-000189	C337	1	"C-CERAMIC,CHIP	""100nF,+80-20%,25V,Y5V,TP,1608,
2203-000189	C338	1	"C-CERAMIC,CHIP	""100nF,+80-20%,25V,Y5V,TP,1608,
2203-000189	C361	1	"C-CERAMIC,CHIP	""100nF,+80-20%,25V,Y5V,TP,1608,
2203-000189	C362	1	"C-CERAMIC,CHIP	""100nF,+80-20%,25V,Y5V,TP,1608,
2203-000189	C363	1	"C-CERAMIC,CHIP	""100nF,+80-20%,25V,Y5V,TP,1608,
2203-000189	C372	1	"C-CERAMIC,CHIP	""100nF,+80-20%,25V,Y5V,TP,1608,
2203-000189	C46	1	"C-CERAMIC,CHIP	""100nF,+80-20%,25V,Y5V,TP,1608,
2203-000189	C49	1	"C-CERAMIC,CHIP	""100nF,+80-20%,25V,Y5V,TP,1608,
2203-000189	C50	1	"C-CERAMIC,CHIP	""100nF,+80-20%,25V,Y5V,TP,1608,
2203-000189	C53	1	"C-CERAMIC,CHIP	""100nF,+80-20%,25V,Y5V,TP,1608,
2203-000189	C62	1	"C-CERAMIC,CHIP	""100nF,+80-20%,25V,Y5V,TP,1608,
2203-000189	C64	1	"C-CERAMIC,CHIP	""100nF,+80-20%,25V,Y5V,TP,1608,
2203-000189	C66	1	"C-CERAMIC,CHIP	""100nF,+80-20%,25V,Y5V,TP,1608,
2203-000189	C68	1	"C-CERAMIC,CHIP	""100nF,+80-20%,25V,Y5V,TP,1608,
2203-000189	C69	1	"C-CERAMIC,CHIP	""100nF,+80-20%,25V,Y5V,TP,1608,
2203-000189	C7	1	"C-CERAMIC,CHIP	""100nF,+80-20%,25V,Y5V,TP,1608,
2203-000189	C70	1	"C-CERAMIC,CHIP	""100nF,+80-20%,25V,Y5V,TP,1608,
2203-000189	C72	1	"C-CERAMIC,CHIP	""100nF,+80-20%,25V,Y5V,TP,1608,
2203-000189	C76	1	"C-CERAMIC,CHIP	""100nF,+80-20%,25V,Y5V,TP,1608,
2203-000189	C8	1	"C-CERAMIC,CHIP	""100nF,+80-20%,25V,Y5V,TP,1608,
2203-000189	C81	1	"C-CERAMIC,CHIP	""100nF,+80-20%,25V,Y5V,TP,1608,
2203-000189	C82	1	"C-CERAMIC,CHIP	""100nF,+80-20%,25V,Y5V,TP,1608,
2203-000189	C83	1	"C-CERAMIC,CHIP	""100nF,+80-20%,25V,Y5V,TP,1608,
2203-000189	C84	1	"C-CERAMIC,CHIP	""100nF,+80-20%,25V,Y5V,TP,1608,
2203-000189	C85	1	"C-CERAMIC,CHIP	""100nF,+80-20%,25V,Y5V,TP,1608,
2203-000189	C86	1	"C-CERAMIC,CHIP	""100nF,+80-20%,25V,Y5V,TP,1608,
2203-000189	C87	1	"C-CERAMIC,CHIP	""100nF,+80-20%,25V,Y5V,TP,1608,
2203-000189	C88	1	"C-CERAMIC,CHIP	""100nF,+80-20%,25V,Y5V,TP,1608,
2203-000189	C89	1	"C-CERAMIC,CHIP	""100nF,+80-20%,25V,Y5V,TP,1608,
2203-000189	C9	1	"C-CERAMIC,CHIP	""100nF,+80-20%,25V,Y5V,TP,1608,
2203-000189	C90	1	"C-CERAMIC,CHIP	""100nF,+80-20%,25V,Y5V,TP,1608,
2203-000189	C91	1	"C-CERAMIC,CHIP	""100nF,+80-20%,25V,Y5V,TP,1608,
2203-000189	C92	1	"C-CERAMIC,CHIP	""100nF,+80-20%,25V,Y5V,TP,1608,
2203-000189	C94	1	"C-CERAMIC,CHIP	""100nF,+80-20%,25V,Y5V,TP,1608,
2203-000189	C95	1	"C-CERAMIC,CHIP	""100nF,+80-20%,25V,Y5V,TP,1608,
2203-000189	C96	1	"C-CERAMIC,CHIP	""100nF,+80-20%,25V,Y5V,TP,1608,
2203-000189	C97	1	"C-CERAMIC,CHIP	""100nF,+80-20%,25V,Y5V,TP,1608,
2203-000189	C99	1	"C-CERAMIC,CHIP	""100nF,+80-20%,25V,Y5V,TP,1608,
2203-000192	C280	1	"C-CERAMIC,CHIP	""100nF,+80-20%,50V,Y5V,TP,2012,
2203-000192	C293	1	"C-CERAMIC,CHIP	""100nF,+80-20%,50V,Y5V,TP,2012,
2203-000192	C295	1	"C-CERAMIC,CHIP	""100nF,+80-20%,50V,Y5V,TP,2012,
2203-000192	C297	1	"C-CERAMIC,CHIP	""100nF,+80-20%,50V,Y5V,TP,2012,
2203-000192	C299	1	"C-CERAMIC,CHIP	""100nF,+80-20%,50V,Y5V,TP,2012,
2203-000192	C32	1	"C-CERAMIC,CHIP	""100nF,+80-20%,50V,Y5V,TP,2012,
2203-000192	C327	1	"C-CERAMIC,CHIP	""100nF,+80-20%,50V,Y5V,TP,2012,

CODE NO.	LOC NO.		DESCRIPTION	SPECIFICATION
2203-000192	C364	1	"C-CERAMIC,CHIP	""100nF,+80-20%,50V,Y5V,TP,2012,
2203-000192	C52	1	"C-CERAMIC,CHIP	""100nF,+80-20%,50V,Y5V,TP,2012,
2203-000236	C106	1	"C-CERAMIC,CHIP	""0.1nF,5%,50V,NP0,TP,1608
2203-000236	C135	1	"C-CERAMIC,CHIP	""0.1nF,5%,50V,NP0,TP,1608
2203-000236	C230	1	"C-CERAMIC,CHIP	""0.1nF,5%,50V,NP0,TP,1608
2203-000236	C5	1	"C-CERAMIC,CHIP	""0.1nF,5%,50V,NP0,TP,1608
2203-000236	C58	1	"C-CERAMIC,CHIP	""0.1nF,5%,50V,NP0,TP,1608
2203-000236	C6	1	"C-CERAMIC,CHIP	""0.1nF,5%,50V,NP0,TP,1608
2203-000236	C60	1	"C-CERAMIC,CHIP	""0.1nF,5%,50V,NP0,TP,1608
2203-000236	C73	1	"C-CERAMIC,CHIP	""0.1nF,5%,50V,NP0,TP,1608
2203-000257	C119	1	"C-CERAMIC,CHIP	""10nF,10%,50V,X7R,TP,1608
2203-000257	C191	1	"C-CERAMIC,CHIP	""10nF,10%,50V,X7R,TP,1608
2203-000257	C20	1	"C-CERAMIC,CHIP	""10nF,10%,50V,X7R,TP,1608
2203-000257	C219	1	"C-CERAMIC,CHIP	""10nF,10%,50V,X7R,TP,1608
2203-000257	C231	1	"C-CERAMIC,CHIP	""10nF,10%,50V,X7R,TP,1608
2203-000257	C317	1	"C-CERAMIC,CHIP	""10nF,10%,50V,X7R,TP,1608
2203-000257	C318	1	"C-CERAMIC,CHIP	""10nF,10%,50V,X7R,TP,1608
2203-000257	C319	1	"C-CERAMIC,CHIP	""10nF,10%,50V,X7R,TP,1608
2203-000257	C328	1	"C-CERAMIC,CHIP	""10nF,10%,50V,X7R,TP,1608
2203-000257	C329	1	"C-CERAMIC,CHIP	""10nF,10%,50V,X7R,TP,1608
2203-000257	C330	1	"C-CERAMIC,CHIP	""10nF,10%,50V,X7R,TP,1608
2203-000257	C331	1	"C-CERAMIC,CHIP	""10nF,10%,50V,X7R,TP,1608
2203-000257	C339	1	"C-CERAMIC,CHIP	""10nF,10%,50V,X7R,TP,1608
2203-000257	C341	1	"C-CERAMIC,CHIP	""10nF,10%,50V,X7R,TP,1608
2203-000257	C42	1	"C-CERAMIC,CHIP	""10nF,10%,50V,X7R,TP,1608
2203-000357	C80	1	"C-CERAMIC,CHIP	""0.15nF,5%,50V,NP0,TP,1608
2203-000426	C105	1	"C-CERAMIC,CHIP	""0.018nF,5%,50V,NP0,TP,1608
2203-000426	C123	1	"C-CERAMIC,CHIP	""0.018nF,5%,50V,NP0,TP,1608
2203-000440	C10	1	"C-CERAMIC,CHIP	""1nF,10%,50V,X7R,TP,1608,-
2203-000440	C17	1	"C-CERAMIC,CHIP	""1nF,10%,50V,X7R,TP,1608,-
2203-000440	C19	1	"C-CERAMIC,CHIP	""1nF,10%,50V,X7R,TP,1608,-
2203-000440	C214	1	"C-CERAMIC,CHIP	""1nF,10%,50V,X7R,TP,1608,-
2203-000440	C23	1	"C-CERAMIC,CHIP	""1nF,10%,50V,X7R,TP,1608,-
2203-000440	C25	1	"C-CERAMIC,CHIP	""1nF,10%,50V,X7R,TP,1608,-
2203-000440	C281	1	"C-CERAMIC,CHIP	""1nF,10%,50V,X7R,TP,1608,-
2203-000440	C283	1	"C-CERAMIC,CHIP	""1nF,10%,50V,X7R,TP,1608,-
2203-000440	C29	1	"C-CERAMIC,CHIP	""1nF,10%,50V,X7R,TP,1608,-
2203-000440	C30	1	"C-CERAMIC,CHIP	""1nF,10%,50V,X7R,TP,1608,-
2203-000440	C323	1	"C-CERAMIC,CHIP	""1nF,10%,50V,X7R,TP,1608,-
2203-000440	C324	1	"C-CERAMIC,CHIP	""1nF,10%,50V,X7R,TP,1608,-
2203-000440	C325	1	"C-CERAMIC,CHIP	""1nF,10%,50V,X7R,TP,1608,-
2203-000440	C335	1	"C-CERAMIC,CHIP	""1nF,10%,50V,X7R,TP,1608,-
2203-000440	C41	1	"C-CERAMIC,CHIP	""1nF,10%,50V,X7R,TP,1608,-
2203-000626	C115	1	"C-CERAMIC,CHIP	""0.022nF,5%,50V,NP0,TP,1608
2203-000626	C120	1	"C-CERAMIC,CHIP	""0.022nF,5%,50V,NP0,TP,1608
2203-000626	C157	1	"C-CERAMIC,CHIP	""0.022nF,5%,50V,NP0,TP,1608
2203-000626	C160	1	"C-CERAMIC,CHIP	""0.022nF,5%,50V,NP0,TP,1608
2203-000626	C197	1	"C-CERAMIC,CHIP	""0.022nF,5%,50V,NP0,TP,1608
2203-000626	C200	1	"C-CERAMIC,CHIP	""0.022nF,5%,50V,NP0,TP,1608
2203-000626	C287	1	"C-CERAMIC,CHIP	""0.022nF,5%,50V,NP0,TP,1608
2203-000626	C288	1	"C-CERAMIC,CHIP	""0.022nF,5%,50V,NP0,TP,1608
2203-000626	C289	1	"C-CERAMIC,CHIP	""0.022nF,5%,50V,NP0,TP,1608
2203-000626	C290	1	"C-CERAMIC,CHIP	""0.022nF,5%,50V,NP0,TP,1608
2203-000626	C358	1	"C-CERAMIC,CHIP	""0.022nF,5%,50V,NP0,TP,1608
2203-000626	C359	1	"C-CERAMIC,CHIP	""0.022nF,5%,50V,NP0,TP,1608
2203-000626	C370	1	"C-CERAMIC,CHIP	""0.022nF,5%,50V,NP0,TP,1608
2203-000626	C371	1	"C-CERAMIC,CHIP	""0.022nF,5%,50V,NP0,TP,1608
2203-000626	C43	1	"C-CERAMIC,CHIP	""0.022nF,5%,50V,NP0,TP,1608
2203-000626	C51	1	"C-CERAMIC,CHIP	""0.022nF,5%,50V,NP0,TP,1608
2203-000626	C61	1	"C-CERAMIC,CHIP	""0.022nF,5%,50V,NP0,TP,1608
2203-000626	C74	1	"C-CERAMIC,CHIP	""0.022nF,5%,50V,NP0,TP,1608
2203-000626	C75	1	"C-CERAMIC,CHIP	""0.022nF,5%,50V,NP0,TP,1608
2203-000783	C333	1	"C-CERAMIC,CHIP	""0.33nF,5%,50V,NP0,TP,1608
2203-000783	C334	1	"C-CERAMIC,CHIP	""0.33nF,5%,50V,NP0,TP,1608
2203-000815	C11	1	"C-CERAMIC,CHIP	""0.033nF,5%,50V,NP0,TP,1608
2203-000815	C12	1	"C-CERAMIC,CHIP	""0.033nF,5%,50V,NP0,TP,1608

CODE NO.	LOC NO.		DESCRIPTION	SPECIFICATION
2203-000815	C13	1	"C-CERAMIC,CHIP	""0.033nF,5%,50V,NP0,TP,1608
2203-000815	C14	1	"C-CERAMIC,CHIP	""0.033nF,5%,50V,NP0,TP,1608
2203-000815	C15	1	"C-CERAMIC,CHIP	""0.033nF,5%,50V,NP0,TP,1608
2203-000815	C154	1	"C-CERAMIC,CHIP	""0.033nF,5%,50V,NP0,TP,1608
2203-000815	C220	1	"C-CERAMIC,CHIP	""0.033nF,5%,50V,NP0,TP,1608
2203-000815	C347	1	"C-CERAMIC,CHIP	""0.033nF,5%,50V,NP0,TP,1608
2203-000815	C348	1	"C-CERAMIC,CHIP	""0.033nF,5%,50V,NP0,TP,1608
2203-000815	C349	1	"C-CERAMIC,CHIP	""0.033nF,5%,50V,NP0,TP,1608
2203-000815	C350	1	"C-CERAMIC,CHIP	""0.033nF,5%,50V,NP0,TP,1608
2203-000815	C351	1	"C-CERAMIC,CHIP	""0.033nF,5%,50V,NP0,TP,1608
2203-000815	C360	1	"C-CERAMIC,CHIP	""0.033nF,5%,50V,NP0,TP,1608
2203-000815	C373	1	"C-CERAMIC,CHIP	""0.033nF,5%,50V,NP0,TP,1608
2203-000815	C374	1	"C-CERAMIC,CHIP	""0.033nF,5%,50V,NP0,TP,1608
2203-001222	C305	1	"C-CERAMIC,CHIP	""820pF,10%,50V,X7R,TP,1608,-
2203-001222	C306	1	"C-CERAMIC,CHIP	""820pF,10%,50V,X7R,TP,1608,-
2203-001222	C307	1	"C-CERAMIC,CHIP	""820pF,10%,50V,X7R,TP,1608,-
2203-001222	C308	1	"C-CERAMIC,CHIP	""820pF,10%,50V,X7R,TP,1608,-
2203-001222	C309	1	"C-CERAMIC,CHIP	""820pF,10%,50V,X7R,TP,1608,-
2203-001222	C310	1	"C-CERAMIC,CHIP	""820pF,10%,50V,X7R,TP,1608,-
2203-001222	C311	1	"C-CERAMIC,CHIP	""820pF,10%,50V,X7R,TP,1608,-
2203-001222	C312	1	"C-CERAMIC,CHIP	""820pF,10%,50V,X7R,TP,1608,-
2203-001408	C158	1	"C-CERAMIC,CHIP	""0.27nF,5%,50V,NP0,TP,1608
2203-001408	C375	1	"C-CERAMIC,CHIP	""0.27nF,5%,50V,NP0,TP,1608
2203-001656	C159	1	"C-CERAMIC,CHIP	""0.47nF,5%,50V,NP0,TP,1608
2203-001683	C352	1	"C-CERAMIC,CHIP	""0.068nF,5%,50V,NP0,TP,1608
2203-001683	C353	1	"C-CERAMIC,CHIP	""0.068nF,5%,50V,NP0,TP,1608
2203-001683	C354	1	"C-CERAMIC,CHIP	""0.068nF,5%,50V,NP0,TP,1608
2203-001683	C355	1	"C-CERAMIC,CHIP	""0.068nF,5%,50V,NP0,TP,1608
2203-001683	C356	1	"C-CERAMIC,CHIP	""0.068nF,5%,50V,NP0,TP,1608
2203-005065	C369	1	"C-CERAMIC,CHIP	""1000nF,+80-20%,10V,Y5V,TP,1608
2203-005105	C79	1	"C-CERAMIC,CHIP	""0.68nF,5%,50V,NP0,TP,1608
2401-000042	C1	1	C-AL	"100uF,20%,16V,GP,TP,6.3x7,5
2401-000042	C28	1	C-AL	"100uF,20%,16V,GP,TP,6.3x7,5
2401-000042	C284	1	C-AL	"100uF,20%,16V,GP,TP,6.3x7,5
2401-000042	C59	1	C-AL	"100uF,20%,16V,GP,TP,6.3x7,5
2401-000207	C342	1	C-AL	"100uF,20%,50V,WT,TP,8x12,5
2401-001185	C78	1	C-AL	"33uF,20%,35V,GP,TP,5x11,5
2401-001197	C256	1	C-AL	"33uF,20%,50V,GP,TP,6.3x7,-
2401-001363	C175	1	C-AL	"470uF,20%,16V,GP,TP,10x12.5,5
2401-001363	C77	1	C-AL	"470uF,20%,16V,GP,TP,10x12.5,5
2401-002075	C343	1	C-AL	"4.7uF,20%,50V,GP,TP,5x11,5
2401-002075	C344	1	C-AL	"4.7uF,20%,50V,GP,TP,5x11,5
2401-002075	C345	1	C-AL	"4.7uF,20%,50V,GP,TP,5x11,5
2401-002300	C27	1	C-AL	"47uF,20%,50V,GP,TP,6.3x11,5
2401-002300	C285	1	C-AL	"47uF,20%,50V,GP,TP,6.3x11,5
2401-002300	C326	1	C-AL	"47uF,20%,50V,GP,TP,6.3x11,5
2401-002300	C47	1	C-AL	"47uF,20%,50V,GP,TP,6.3x11,5
2401-002300	C48	1	C-AL	"47uF,20%,50V,GP,TP,6.3x11,5
2703-000158	L8	1	INDUCTOR-SMD	"1uH,10%,1.25x2x0.85mm
2801-003699	OSC2	1	CRYSTAL-UNIT	"48MHz,50ppm,28-ABM,12pF,80ohm,
2801-004079	OSC1	1	CRYSTAL-UNIT	"6.9083MHZ,50PPM,28-AAM,16PF,50OHM,BK
2804-000378	OSC4	1	OSCILLATOR-CLOCK	"40MHz,100ppm,10 TTL,-,5V,30mA
2804-001163	OSC5	1	OSCILLATOR-CLOCK	"20MHz,50ppm,10TTL & CMOS,ST,5V
2804-001473	OSC7	1	OSCILLATOR-CLOCK	"45.3928MHZ,100PPM,10 TTL,ST,5V,40MA
2901-001178	F1	1	FILTER-EMI SMD	"25V,2A,-,100000pF,2x1.25x1mm,TP
2901-001178	F2	1	FILTER-EMI SMD	"25V,2A,-,100000pF,2x1.25x1mm,TP
2901-001178	F3	1	FILTER-EMI SMD	"25V,2A,-,100000pF,2x1.25x1mm,TP
2901-001178	F4	1	FILTER-EMI SMD	"25V,2A,-,100000pF,2x1.25x1mm,TP
2901-001178	F5	1	FILTER-EMI SMD	"25V,2A,-,100000pF,2x1.25x1mm,TP
2901-001178	F6	1	FILTER-EMI SMD	"25V,2A,-,100000pF,2x1.25x1mm,TP
3301-000317	L23	1	CORE-FERRITE BEAD	"AB,2x1.25x0.9mm,-,-
3301-000317	L24	1	CORE-FERRITE BEAD	"AB,2x1.25x0.9mm,-,-
3301-000317	L25	1	CORE-FERRITE BEAD	"AB,2x1.25x0.9mm,-,-
3301-000317	L26	1	CORE-FERRITE BEAD	"AB,2x1.25x0.9mm,-,-
3301-000317	L27	1	CORE-FERRITE BEAD	"AB,2x1.25x0.9mm,-,-
3301-000317	L28	1	CORE-FERRITE BEAD	"AB,2x1.25x0.9mm,-,-

CODE NO.	LOC NO.		DESCRIPTION	SPECIFICATION
3301-000317	L29	1	CORE-FERRITE BEAD	"AB,2x1.25x0.9mm,-,-
3301-000317	L9	1	CORE-FERRITE BEAD	"AB,2x1.25x0.9mm,-,-
3301-000325	L1	1	CORE-FERRITE BEAD	"AB,3.2x2.5x1.3mm,-,-
3301-000325	L11	1	CORE-FERRITE BEAD	"AB,3.2x2.5x1.3mm,-,-
3301-000325	L12	1	CORE-FERRITE BEAD	"AB,3.2x2.5x1.3mm,-,-
3301-000325	L13	1	CORE-FERRITE BEAD	"AB,3.2x2.5x1.3mm,-,-
3301-000325	L14	1	CORE-FERRITE BEAD	"AB,3.2x2.5x1.3mm,-,-
3301-000325	L15	1	CORE-FERRITE BEAD	"AB,3.2x2.5x1.3mm,-,-
3301-000325	L4	1	CORE-FERRITE BEAD	"AB,3.2x2.5x1.3mm,-,-
3301-000325	L5	1	CORE-FERRITE BEAD	"AB,3.2x2.5x1.3mm,-,-
3301-000325	L6	1	CORE-FERRITE BEAD	"AB,3.2x2.5x1.3mm,-,-
3301-000325	L7	1	CORE-FERRITE BEAD	"AB,3.2x2.5x1.3mm,-,-
3301-000344	BD1	1	CORE-FERRITE BEAD	"AA,-,3.5x0.6x6.5mm,-,-,Mn-Zn,-
3301-000344	BD2	1	CORE-FERRITE BEAD	"AA,-,3.5x0.6x6.5mm,-,-,Mn-Zn,-
3301-000344	BD3	1	CORE-FERRITE BEAD	"AA,-,3.5x0.6x6.5mm,-,-,Mn-Zn,-
3301-001425	L16	1	CORE-FERRITE BEAD	"AB,120ohm,3.2x1.6x1.1mm,900mA,TP,-,0.15ohm
3301-001425	L19	1	CORE-FERRITE BEAD	"AB,120ohm,3.2x1.6x1.1mm,900mA,TP,-,0.15ohm
3301-001425	L22	1	CORE-FERRITE BEAD	"AB,120ohm,3.2x1.6x1.1mm,900mA,TP,-,0.15ohm
3702-000118	CN14	1	CONNECTOR-RIBBON	"36P,FEMALE,ANGLE,AU
3708-001531	CN3	1	CONNECTOR-FPC/FFC/PIC	"22P,1mm,STRAIGHT,SN
3711-000164	CN23	1	CONNECTOR-HEADER	"1WALL,2P,1R,2.5mm,STRAIGHT,SN
3711-000198	CN16	1	CONNECTOR-HEADER	"1WALL,3P,1R,2.5mm,STRAIGHT,SN
3711-000225	CN26	1	CONNECTOR-HEADER	"1WALL,4P,1R,2.5mm,STRAIGHT,SN
3711-002807	CN19	1	CONNECTOR-HEADER	"BOX,6P,1R,2mm,STRAIGHT,SN
3711-002809	CN28	1	CONNECTOR-HEADER	"BOX,8P,1R,2mm,STRAIGHT,SN
3711-002812	CN7	1	CONNECTOR-HEADER	"BOX,11P,1R,2mm,STRAIGHT,SN
3711-003204	CN2	1	CONNECTOR-HEADER	"BOX,24P,2R,2mm,STRAIGHT,SN
3711-003204	CN8	1	CONNECTOR-HEADER	"BOX,24P,2R,2mm,STRAIGHT,SN
3711-003408	CN15	1	CONNECTOR-HEADER	"BOX,2P,1R,2mm,STRAIGHT,SN
3711-003408	CN21	1	CONNECTOR-HEADER	"BOX,2P,1R,2mm,STRAIGHT,SN
3711-003408	CN27	1	CONNECTOR-HEADER	"BOX,2P,1R,2mm,STRAIGHT,SN
3711-003408	CN30	1	CONNECTOR-HEADER	"BOX,2P,1R,2mm,STRAIGHT,SN
3711-003408	CN4	1	CONNECTOR-HEADER	"BOX,2P,1R,2mm,STRAIGHT,SN
3711-003409	CN18	1	CONNECTOR-HEADER	"BOX,3P,1R,2mm,STRAIGHT,SN
3711-003409	CN25	1	CONNECTOR-HEADER	"BOX,3P,1R,2mm,STRAIGHT,SN
3711-003409	CN5	1	CONNECTOR-HEADER	"BOX,3P,1R,2mm,STRAIGHT,SN
3711-003410	CN17	1	CONNECTOR-HEADER	"BOX,4P,1R,2mm,STRAIGHT,SN
3711-003410	CN22	1	CONNECTOR-HEADER	"BOX,4P,1R,2mm,STRAIGHT,SN
3711-003410	CN29	1	CONNECTOR-HEADER	"BOX,4P,1R,2mm,STRAIGHT,SN
3711-003968	CN9	1	CONNECTOR-HEADER	"BOX,3P,1R,2.5mm,STRAIGHT,SN
3722-001101	CN11	1	JACK-USB	"4P/2C,8.38MM,AU,IVR,#22-28
4301-000108	BAT1	1	BATTERY-LI	"3V,220mAH,BUTTON,20x3.2mm,NO
JB13-00002A	U12	1	IC ASIC-UNICON	"MJC-1300G,UNICON,QFP,44P,-
JC11-10507A	FON	1	IC MASK ROM-HIGH	"ML-165,KM23C8105DG,SOP,44P,600
JC11-10510A	U28(FON	1	"IC MASK ROM-PCL6,LOW	""ml-165,KM23C8105DG,SOP,44P,600
JC13-00006A	U36	1	IC ASIC-SPGPE+	"ML-6060,KS32C61200,QFP,240P,36.4x4
JC13-00013A	U16	1	IC ASIC-IMAGE PROCESSOR	"CIP3,SCX-5100,208,5V,-,QFP,TP,-,PLASTIC,IMAGE PROCESSOR
JC41-00125A	PCB	1	PCB-MAIN	"SCX-5100,FR-4,2L,V1.0,1.6T,235 X 215MM,-,-,-,-
JC68-00573A		2	LABEL(R)-BARCODE	"ML-4500,PET,T0.05,10mm,20mm,-,WHT,-,-,-

7-2 Плата панели управления

CODE NO.	LOC NO.		DESCRIPTION	SPECIFICATION
0401-000116	D1	1	DIODE-SWITCHING	"MMSD914T1,100V,200mA,SOD-123,TP
0401-000116	D2	1	DIODE-SWITCHING	"MMSD914T1,100V,200mA,SOD-123,TP
0401-000116	D3	1	DIODE-SWITCHING	"MMSD914T1,100V,200mA,SOD-123,TP
0401-000116	D4	1	DIODE-SWITCHING	"MMSD914T1,100V,200mA,SOD-123,TP
0401-000116	D5	1	DIODE-SWITCHING	"MMSD914T1,100V,200mA,SOD-123,TP
0501-000279	Q1	1	TR-SMALL SIGNAL	"KSA1182-Y,PNP,150mW,SOT-23,TP,
0601-001404	LED1	1	LED	"CHIP,RED,2.0mm,660mm
0801-001090	U2	1	IC-CMOS LOGIC	"74HC14,SCHIMITT INVERTER,SOP,1
2007-000033	J1	1	R-CHIP	"0OHM,5%,1/8W,DA,TP,3216
2007-000033	J10	1	R-CHIP	"0OHM,5%,1/8W,DA,TP,3216
2007-000033	J11	1	R-CHIP	"0OHM,5%,1/8W,DA,TP,3216
2007-000033	J12	1	R-CHIP	"0OHM,5%,1/8W,DA,TP,3216
2007-000033	J15	1	R-CHIP	"0OHM,5%,1/8W,DA,TP,3216
2007-000033	J16	1	R-CHIP	"0OHM,5%,1/8W,DA,TP,3216
2007-000033	J2	1	R-CHIP	"0OHM,5%,1/8W,DA,TP,3216
2007-000033	J3	1	R-CHIP	"0OHM,5%,1/8W,DA,TP,3216
2007-000033	J6	1	R-CHIP	"0OHM,5%,1/8W,DA,TP,3216
2007-000033	J8	1	R-CHIP	"0OHM,5%,1/8W,DA,TP,3216
2007-000033	J87	1	R-CHIP	"0OHM,5%,1/8W,DA,TP,3216
2007-000033	J88	1	R-CHIP	"0OHM,5%,1/8W,DA,TP,3216
2007-000033	J89	1	R-CHIP	"0OHM,5%,1/8W,DA,TP,3216
2007-000033	J9	1	R-CHIP	"0OHM,5%,1/8W,DA,TP,3216
2007-000033	J90	1	R-CHIP	"0OHM,5%,1/8W,DA,TP,3216
2007-000033	J91	1	R-CHIP	"0OHM,5%,1/8W,DA,TP,3216
2007-000074	R44	1	R-CHIP	"100ohm,5%,1/16W,DA,TP,1608
2007-000074	R45	1	R-CHIP	"100ohm,5%,1/16W,DA,TP,1608
2007-000078	R42	1	R-CHIP	"1Kohm,5%,1/16W,DA,TP,1608
2007-000090	R12	1	R-CHIP	"10KOHM,5%,1/16W,DA,TP,1608
2007-000094	R1	1	R-CHIP	"22Kohm,5%,1/16W,DA,TP,1608
2007-000094	R11	1	R-CHIP	"22Kohm,5%,1/16W,DA,TP,1608
2007-000094	R2	1	R-CHIP	"22Kohm,5%,1/16W,DA,TP,1608
2007-000094	R26	1	R-CHIP	"22Kohm,5%,1/16W,DA,TP,1608
2007-000094	R27	1	R-CHIP	"22Kohm,5%,1/16W,DA,TP,1608
2007-000094	R28	1	R-CHIP	"22Kohm,5%,1/16W,DA,TP,1608
2007-000094	R29	1	R-CHIP	"22Kohm,5%,1/16W,DA,TP,1608
2007-000094	R30	1	R-CHIP	"22Kohm,5%,1/16W,DA,TP,1608
2007-000094	R31	1	R-CHIP	"22Kohm,5%,1/16W,DA,TP,1608
2007-000094	R32	1	R-CHIP	"22Kohm,5%,1/16W,DA,TP,1608
2007-000094	R33	1	R-CHIP	"22Kohm,5%,1/16W,DA,TP,1608
2007-000120	R14	1	R-CHIP	"680ohm,5%,1/16W,DA,TP,1608
2007-000539	R43	1	R-CHIP	"200ohm,5%,1/16W,DA,TP,1608
2203-000189	C14	1	"C-CERAMIC,CHIP	""100nF,+80-20%,25V,Y5V,TP,1608,
2203-000189	C16	1	"C-CERAMIC,CHIP	""100nF,+80-20%,25V,Y5V,TP,1608,
2203-000189	C2	1	"C-CERAMIC,CHIP	""100nF,+80-20%,25V,Y5V,TP,1608,
2203-000189	C3	1	"C-CERAMIC,CHIP	""100nF,+80-20%,25V,Y5V,TP,1608,
2203-000236	C9	1	"C-CERAMIC,CHIP	""0.1nF,5%,50V,NP0,TP,1608
2203-000626	C6	1	"C-CERAMIC,CHIP	""0.022nF,5%,50V,NP0,TP,1608
2203-000626	C7	1	"C-CERAMIC,CHIP	""0.022nF,5%,50V,NP0,TP,1608
2203-000626	C8	1	"C-CERAMIC,CHIP	""0.022nF,5%,50V,NP0,TP,1608
2203-000998	C12	1	"C-CERAMIC,CHIP	""0.047nF,5%,50V,NP0,TP,1608
2203-000998	C13	1	"C-CERAMIC,CHIP	""0.047nF,5%,50V,NP0,TP,1608
2402-000176	C1	1	"C-AL,SMD	""10uF,20%,16V,GP,TP,4.3x4.3x5.4
2404-000284	C15	1	"C-TA,CHIP	""10uF,20%,16V,-,TP,3528,-
2802-001069	OSC1	1	RESONATOR-CERAMIC	"7.37MHz,0.5%,TP,4.7x4.1x1.7
3711-003411	CN2	1	CONNECTOR-HEADER	"BOX,5P,1R,2mm,STRAIGHT,SN
JB13-00004A	U1	1	IC ASIC-OPE	"SF-3100,HT48C5,SSOP,48P,16.18X10.67X2.79
JC41-00126A	OPE PCB(XEROX)	1	PCB-OPE(XEROX)	"SCX-5100,FR-1,1L,V1.0,1.6T,326 X 170MM,-,X2,-,-
JG07-20001A	LCD	1	LCD	"SF4000,UC-162937-TNAR5-A,BLK/G
JG39-41019A	LCD HARNESS	1	CBF HARNESS-LCD	"SF4400,WIRE,UL2878,40mm,GRY,#2

8. Блок-схемы

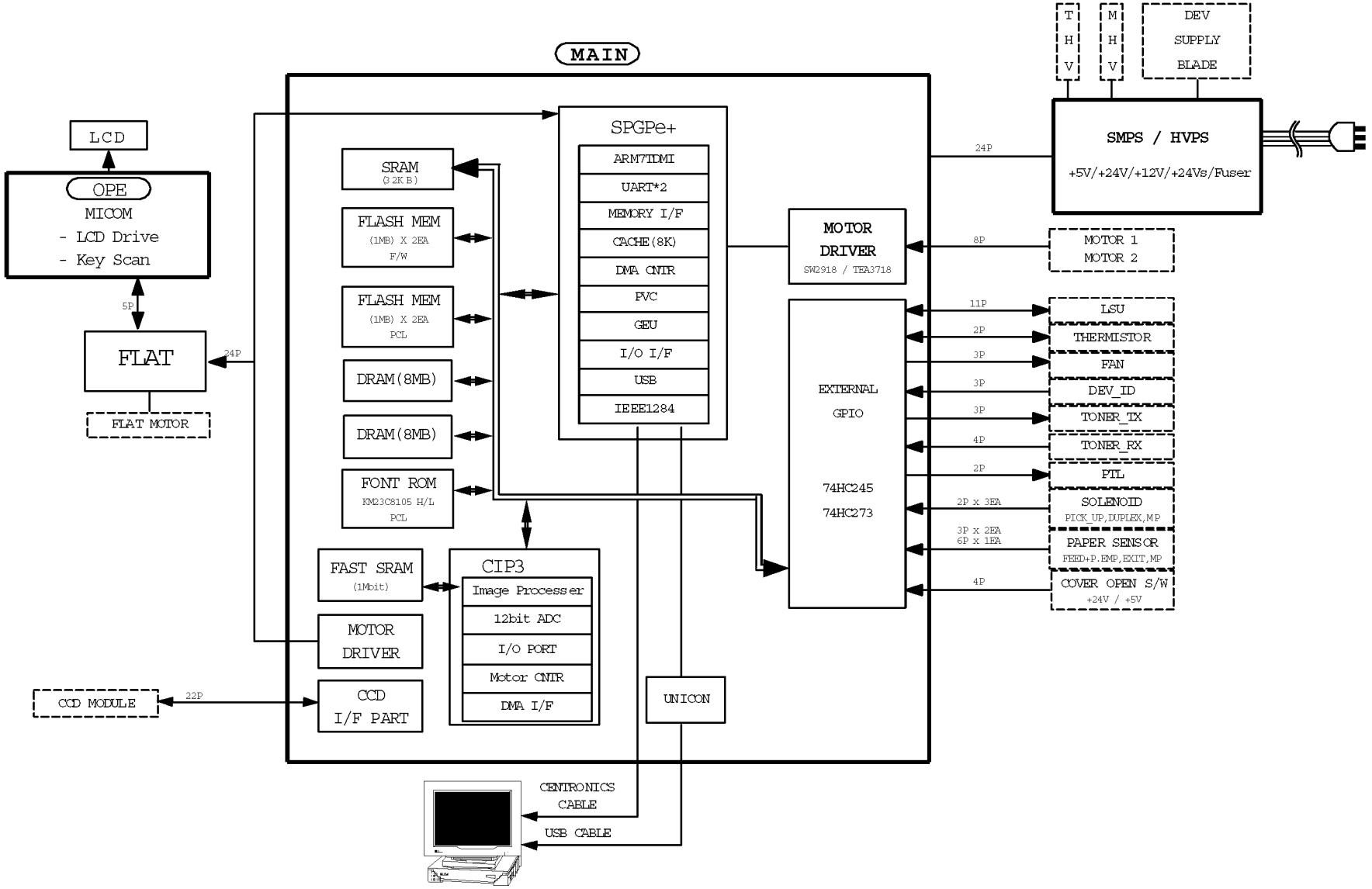
MAIN
LCD
OPE
MICOM
- LCD Drive
- Key Scan
5P
FLAT
24P
FLAT MOTOR
SRAM
(32KB)
FLASH MEM
(1MB) X 2EA
F/W
FLASH MEM
(1MB) X 2EA
PCL
DRAM(8MB)
DRAM(8MB)
FONT ROM
KM23C8105 H/L
PCL
SPGPe+
ARM7TDMI
UART*2
MEMORY I/F
CACHE(8K)
DMA CNTR
PVC
GEU
I/O I/F
USB
IEEE1284
MOTOR
DRIVER
SW2918 / TEA3718
EXTERNAL
GPIO
74HC245
74HC273
FAST SRAM
(1Mbit)
CIP3
Image Processer
12bit ADC
I/O PORT
Motor CNTR
DMA I/F
MOTOR
DRIVER
CCD
I/F PART
CCD MODULE
22P
UNICON
CENTRONICS
CABLE
USB CABLE
T
H
V
M
H
V
DEV
SUPPLY
BLADE
SMPS / HVPS
+5V/+24V/+12V/+24Vs/Fuser
24P
8P
MOTOR 1
MOTOR 2
11P
LSU
2P
THERMISTOR
3P
FAN
3P
DEV_ID
3P
TONER_IX
4P
TONER_RX
2P
PIL
2P x 3EA
SOLENOID
PICK_UP,DUPLEX,MP
3P x 2EA
6P x 1EA
PAPER SENSOR
FEED+P.EMP,EXIT,MP
4P
COVER OPEN S/W
+24V / +5V

9. Схемы соединений узлов

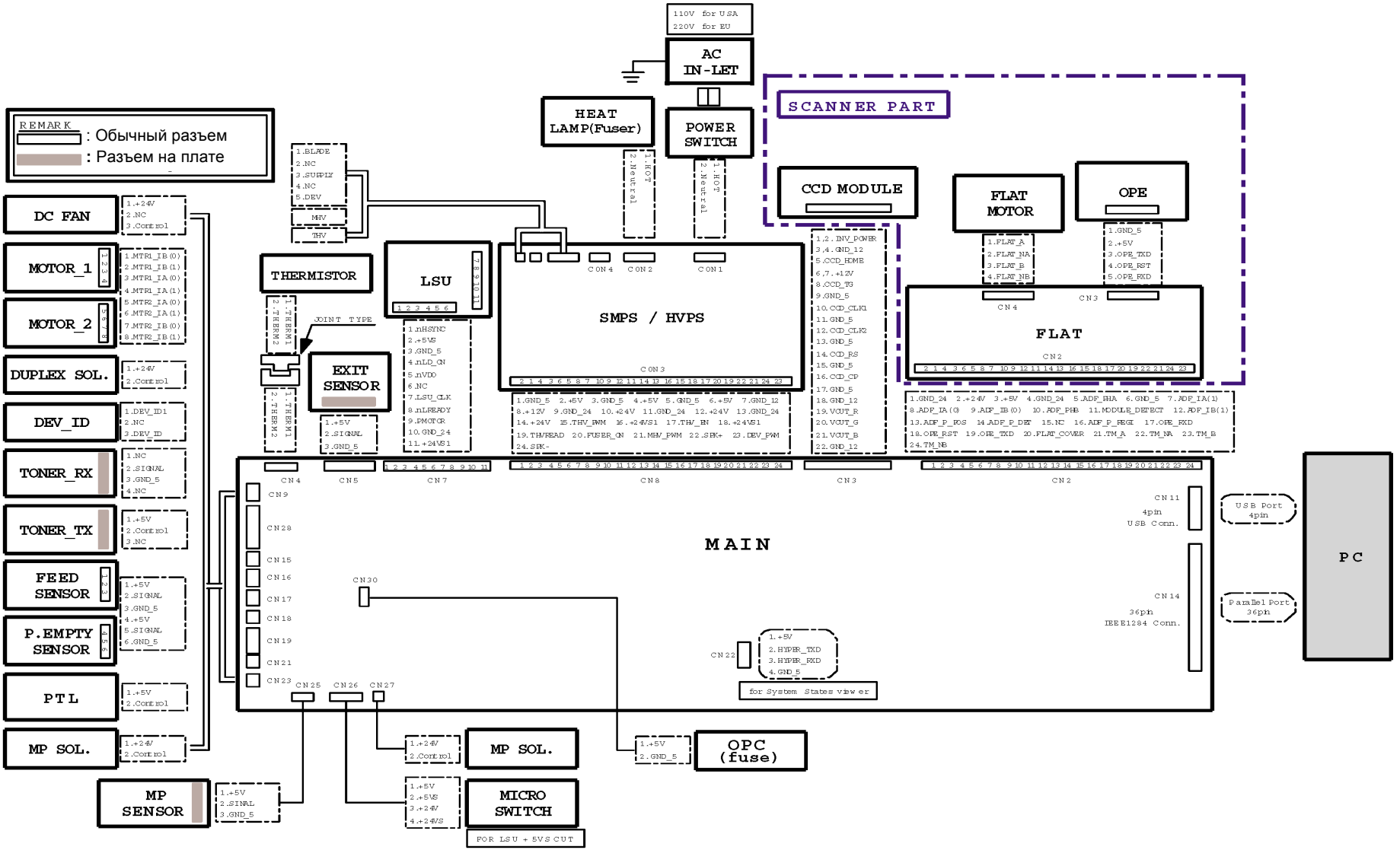

10. Схемы электрических соединений

10-1 Схема главной цепи (1/14)

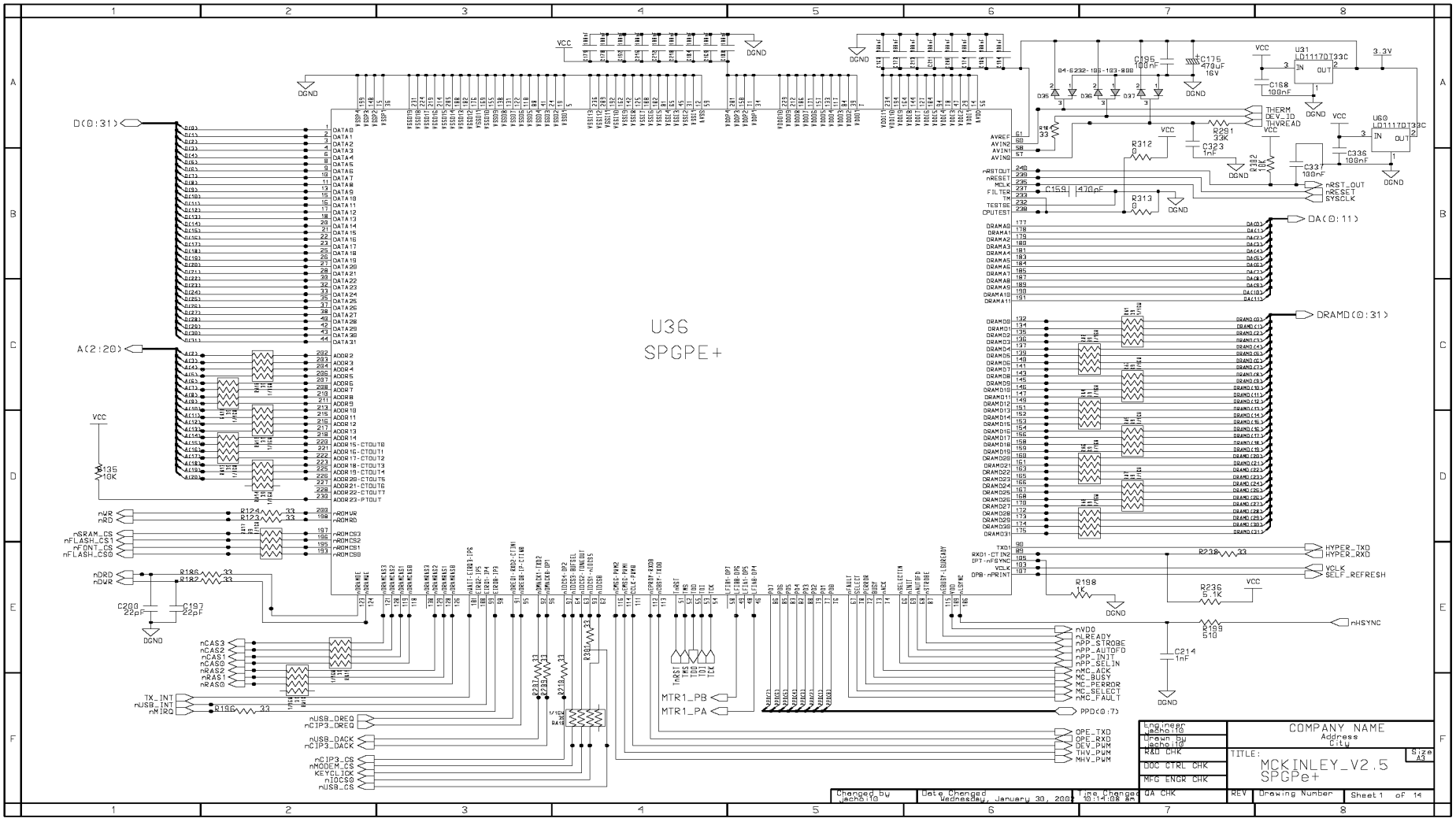

Схема главной цепи (2/14)

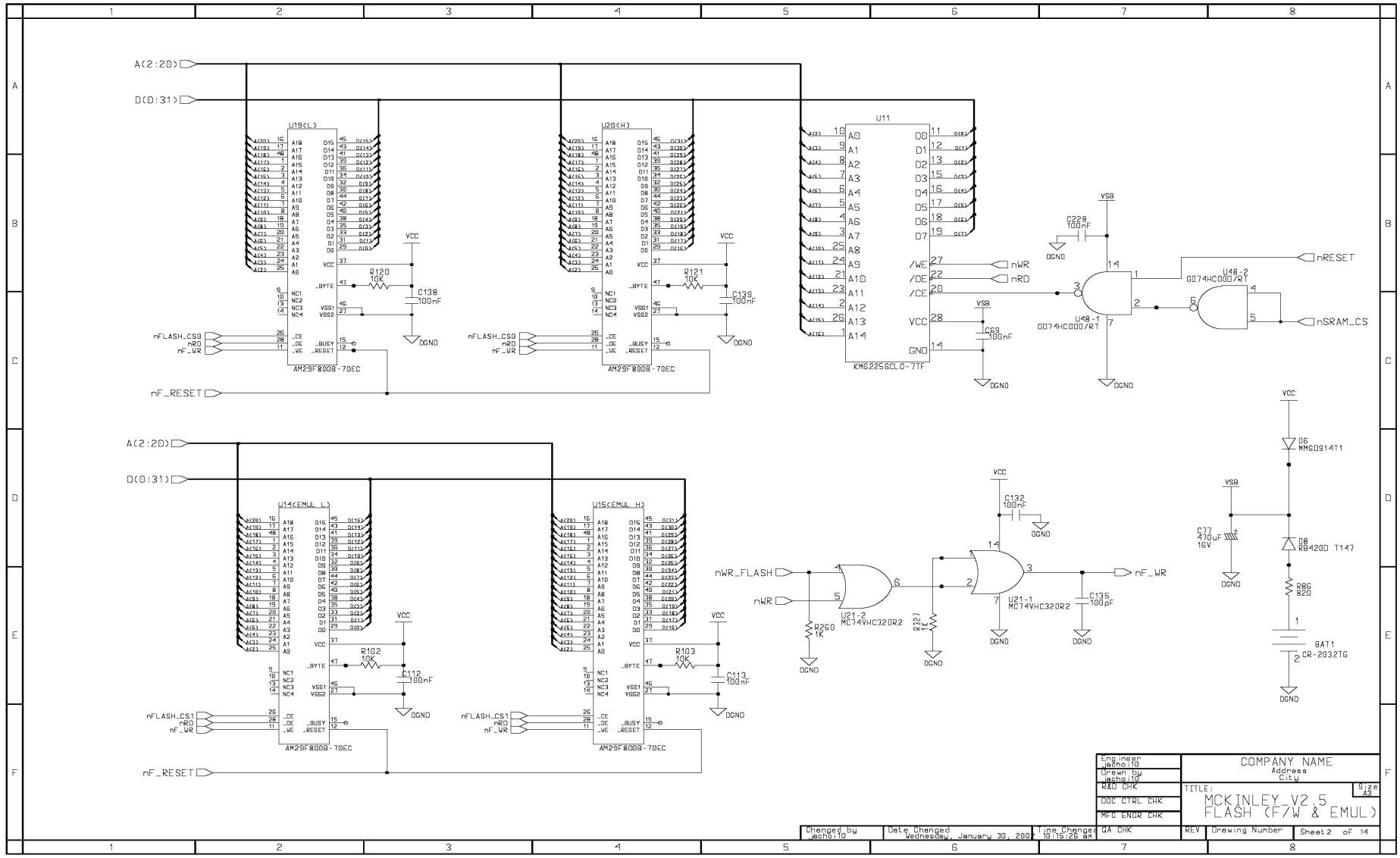

Схема главной цепи (3/14)

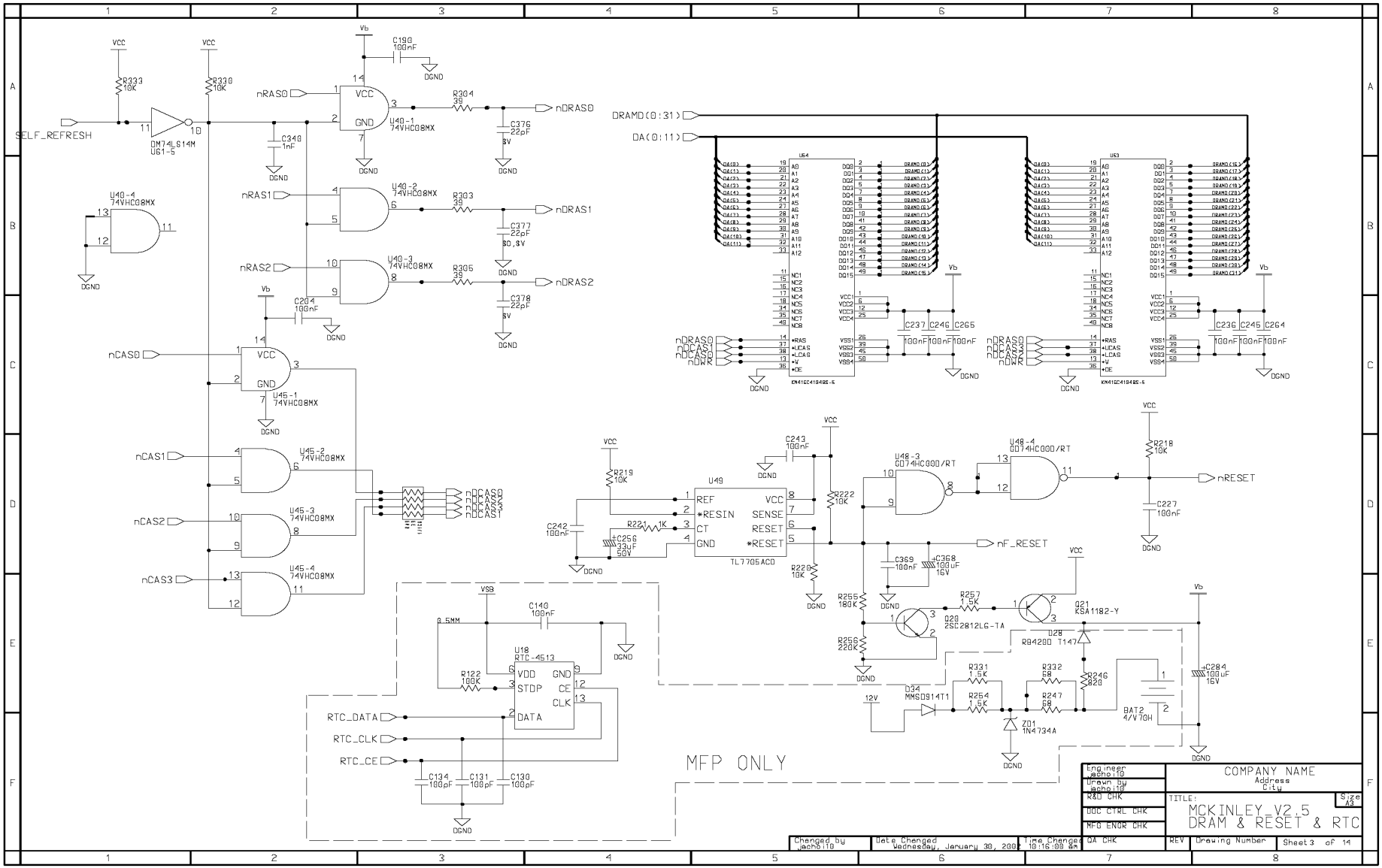

Схема главной цепи (4/14)

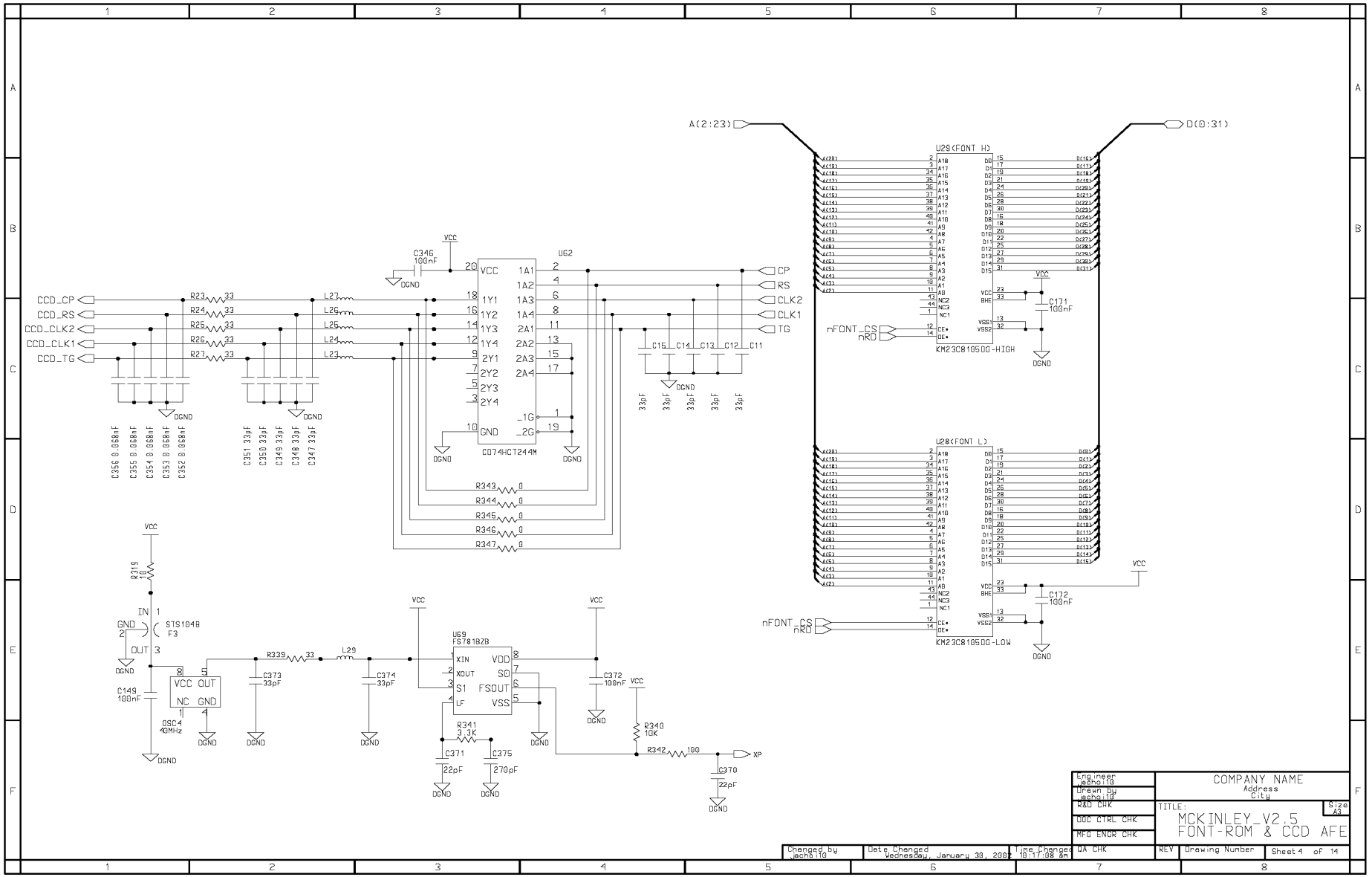

Схема главной цепи (5/14)

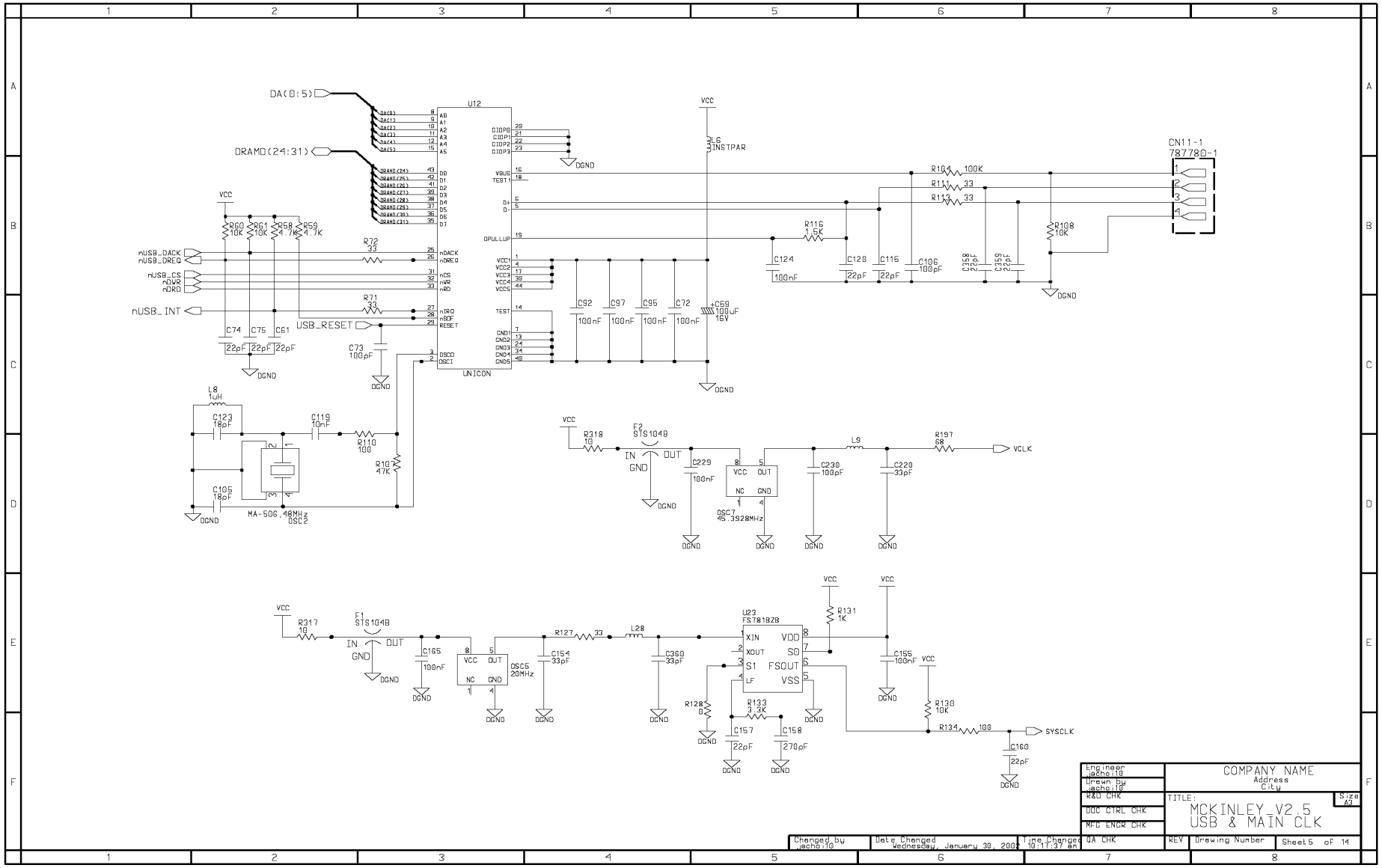

Схема главной цепи (6/14)

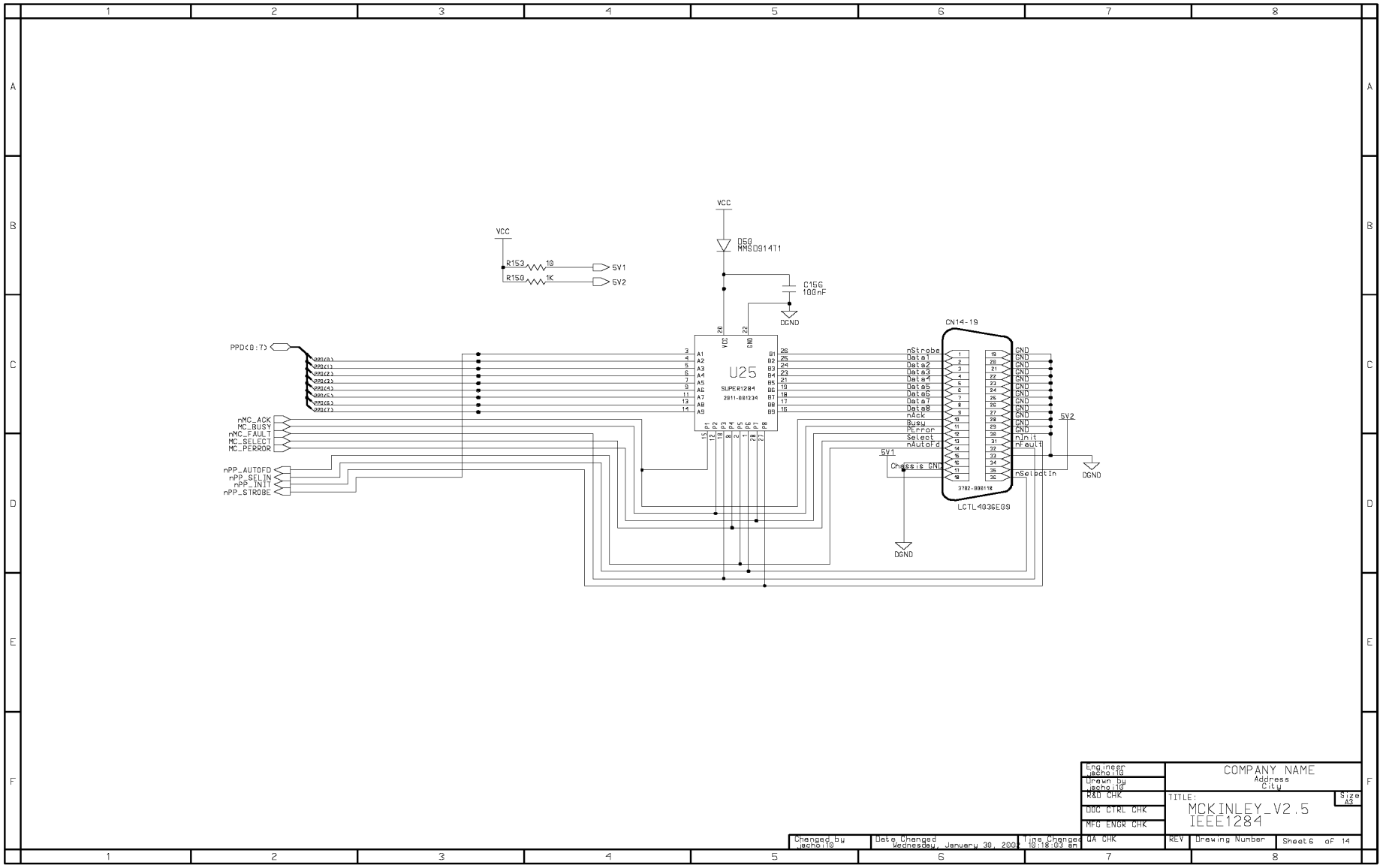

Схема главной цепи (7/14)

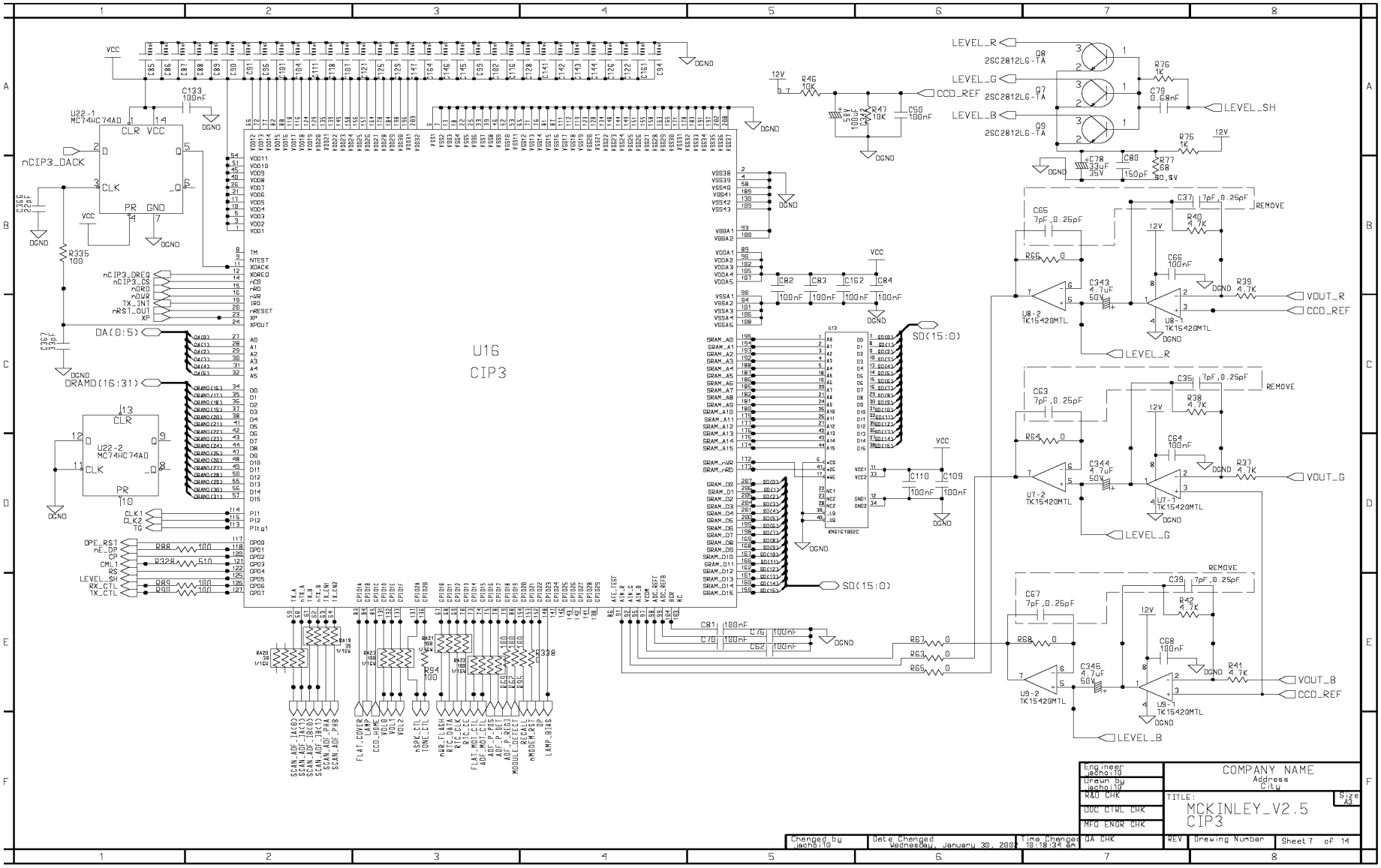

Схема главной цепи (8/14)

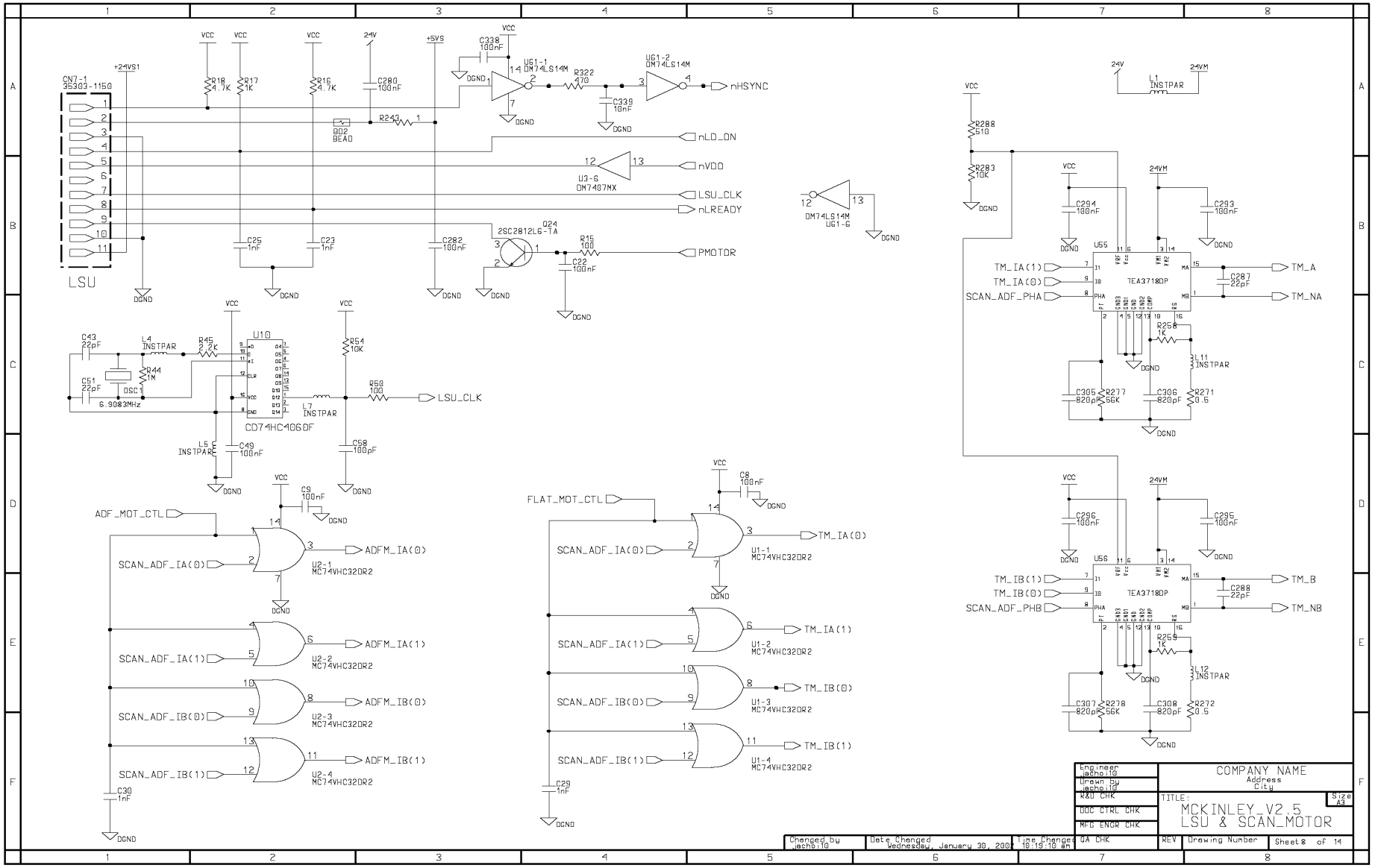

Схема главной цепи (9/14)

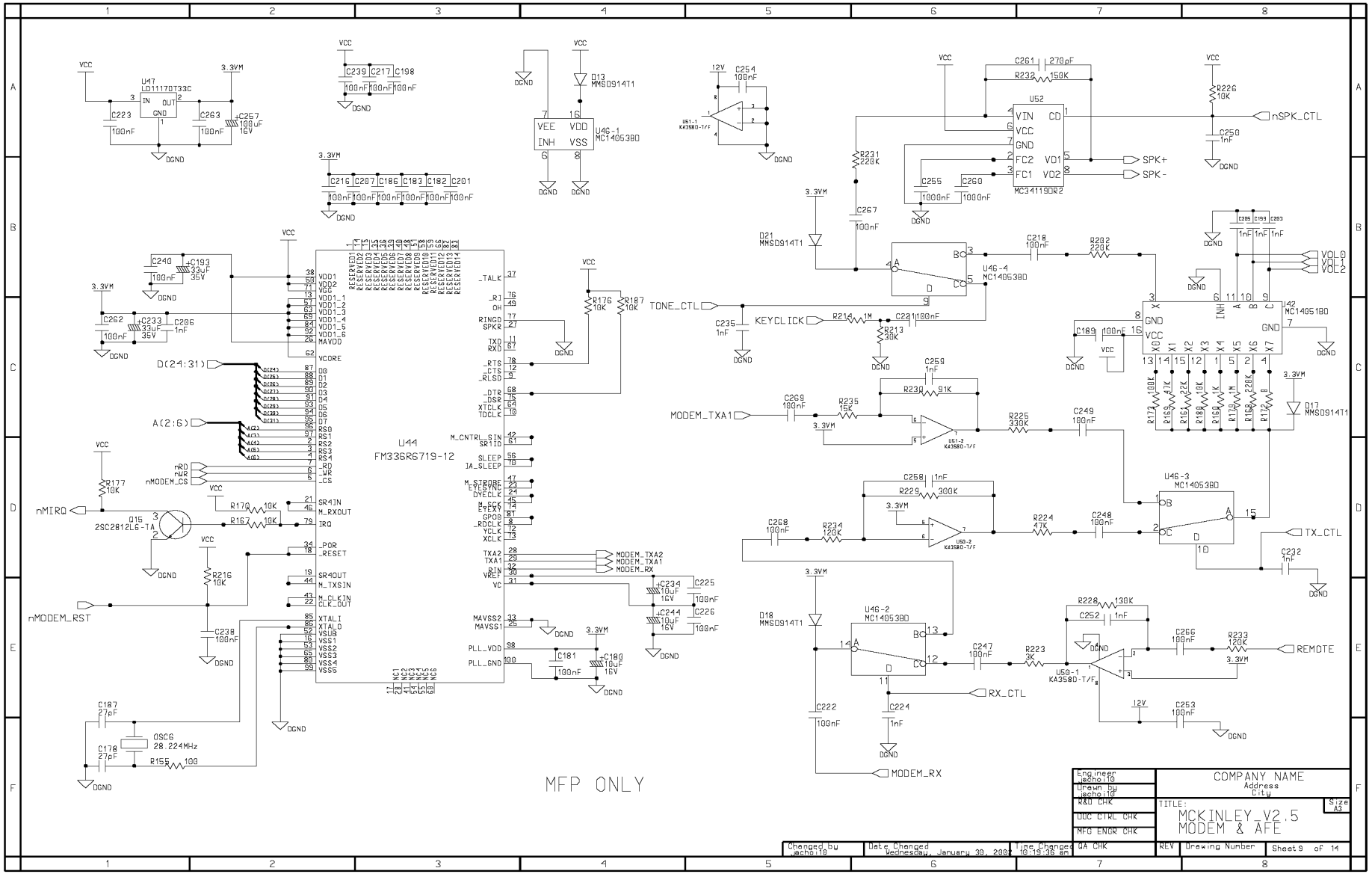

Схема главной цепи (10/14)

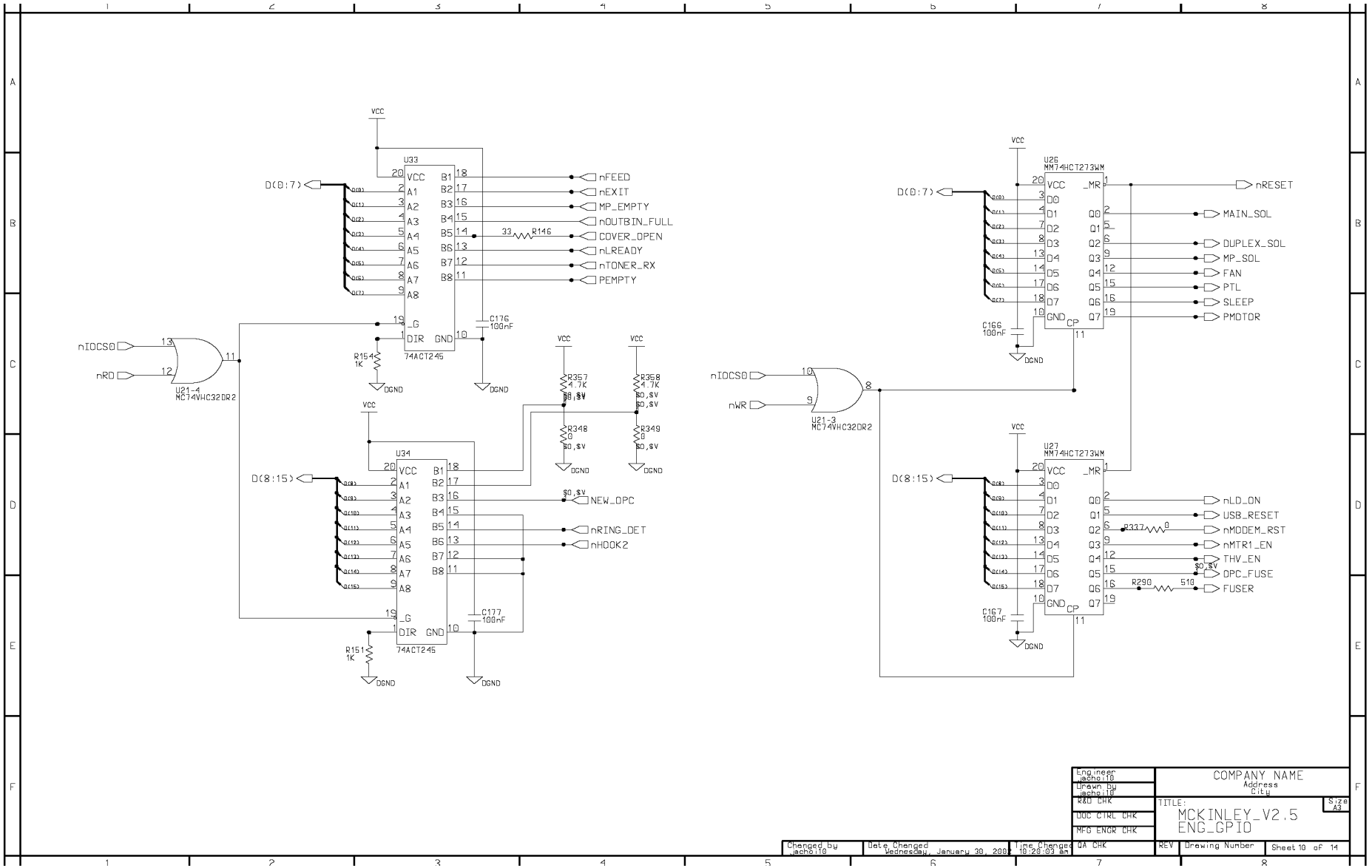

Схема главной цепи (11/14)

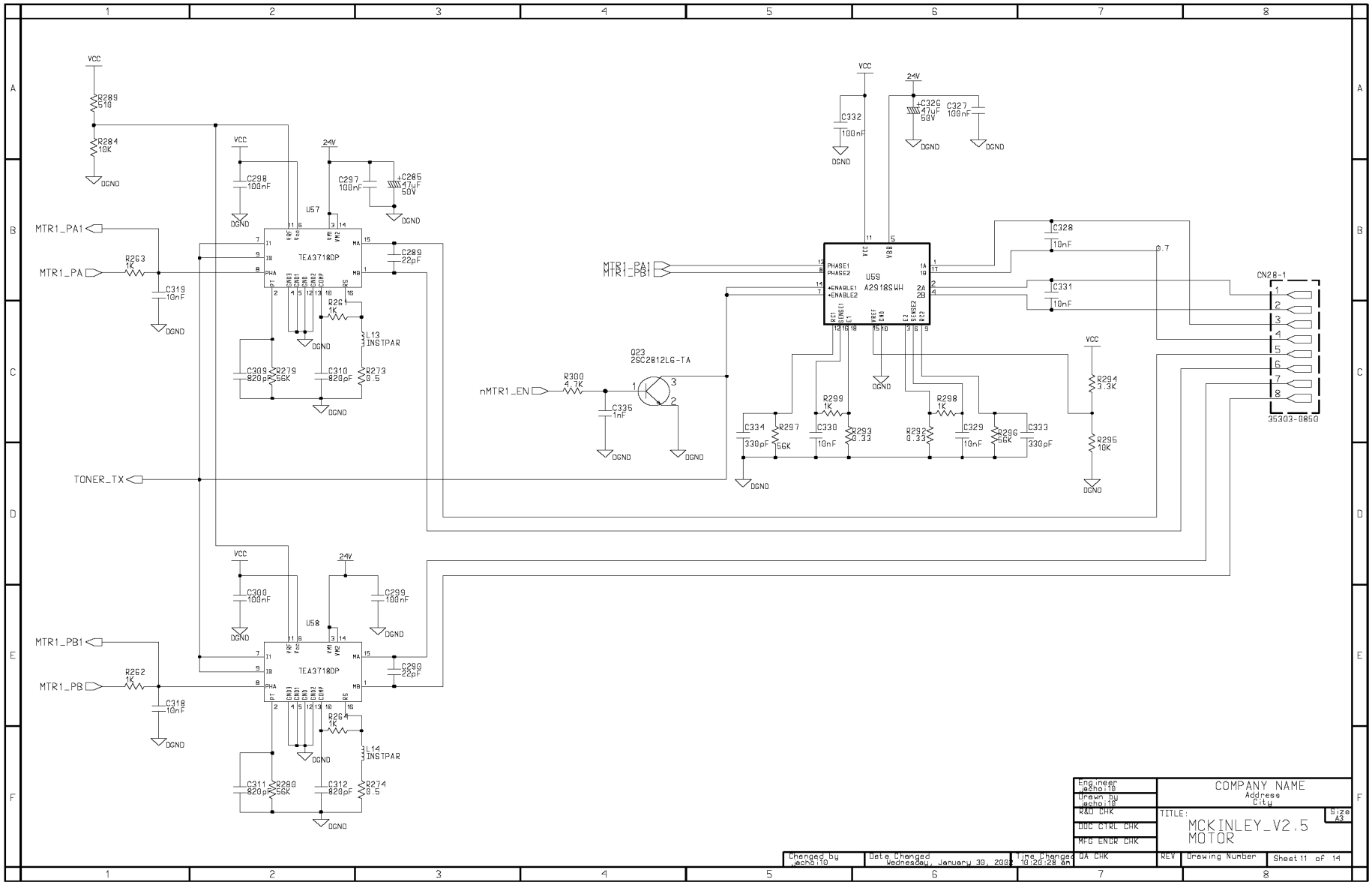

Схема главной цепи (12/14)

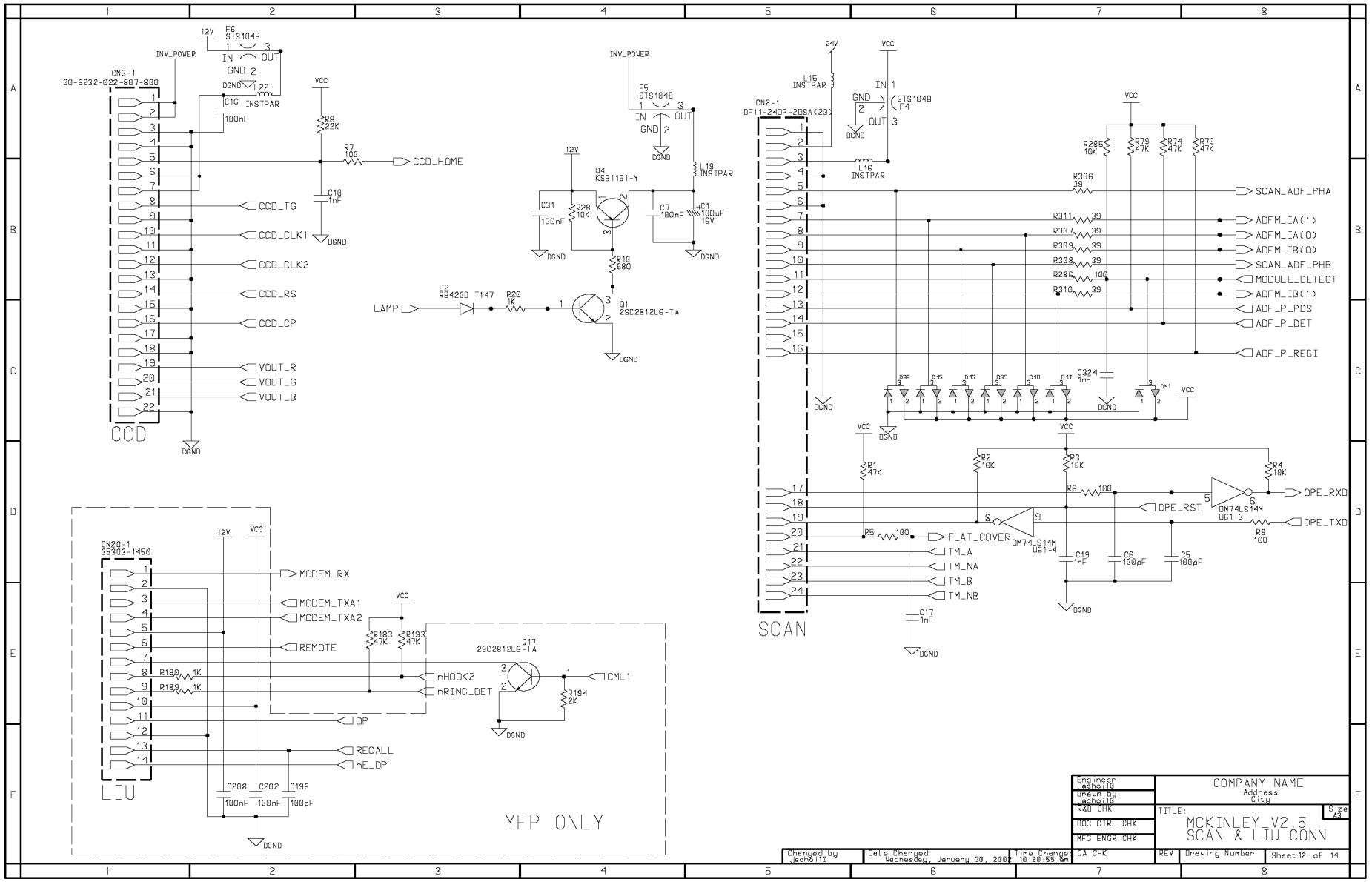

Схема главной цепи (13/14)

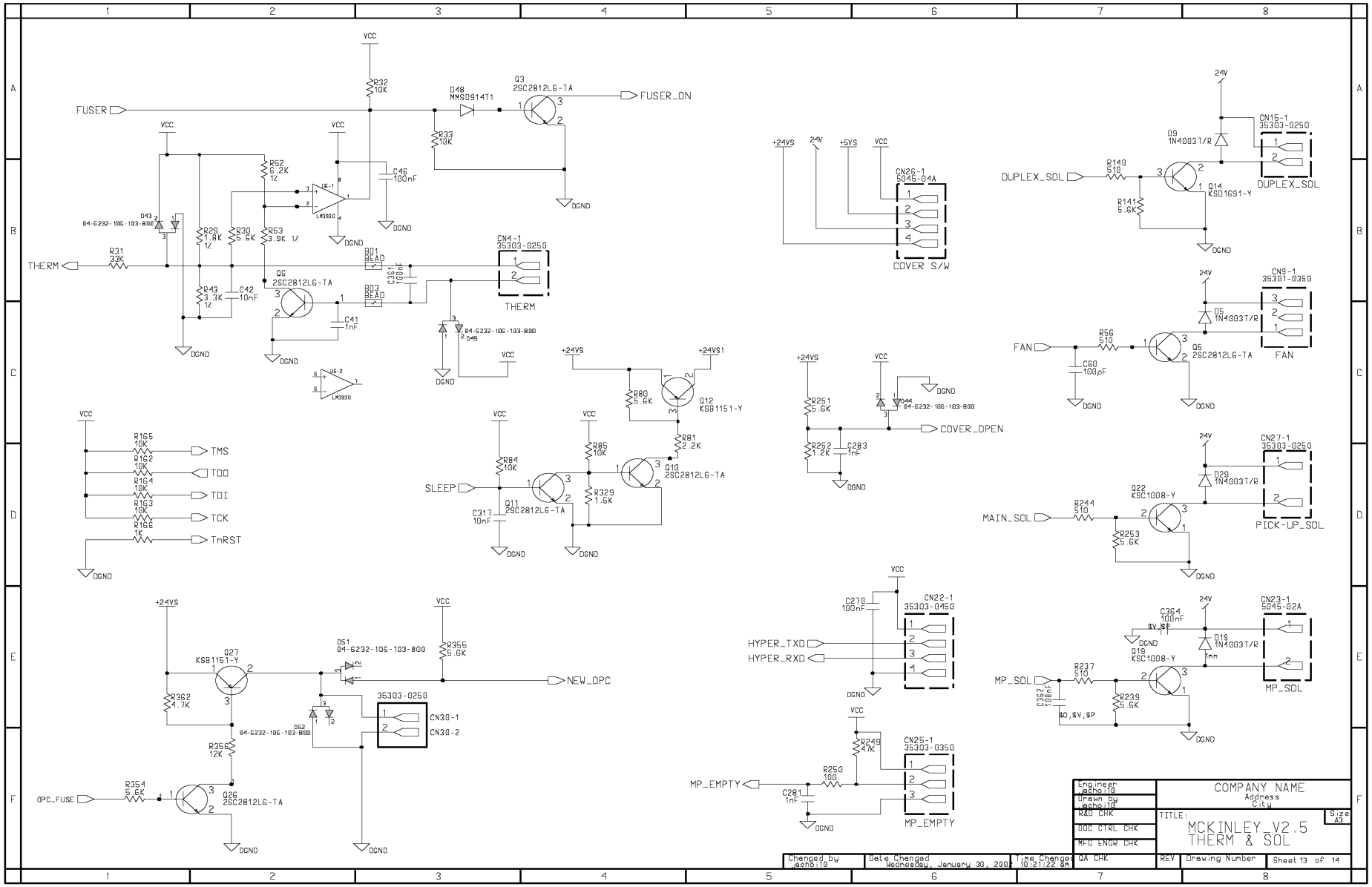

Схема главной цепи (14/14)

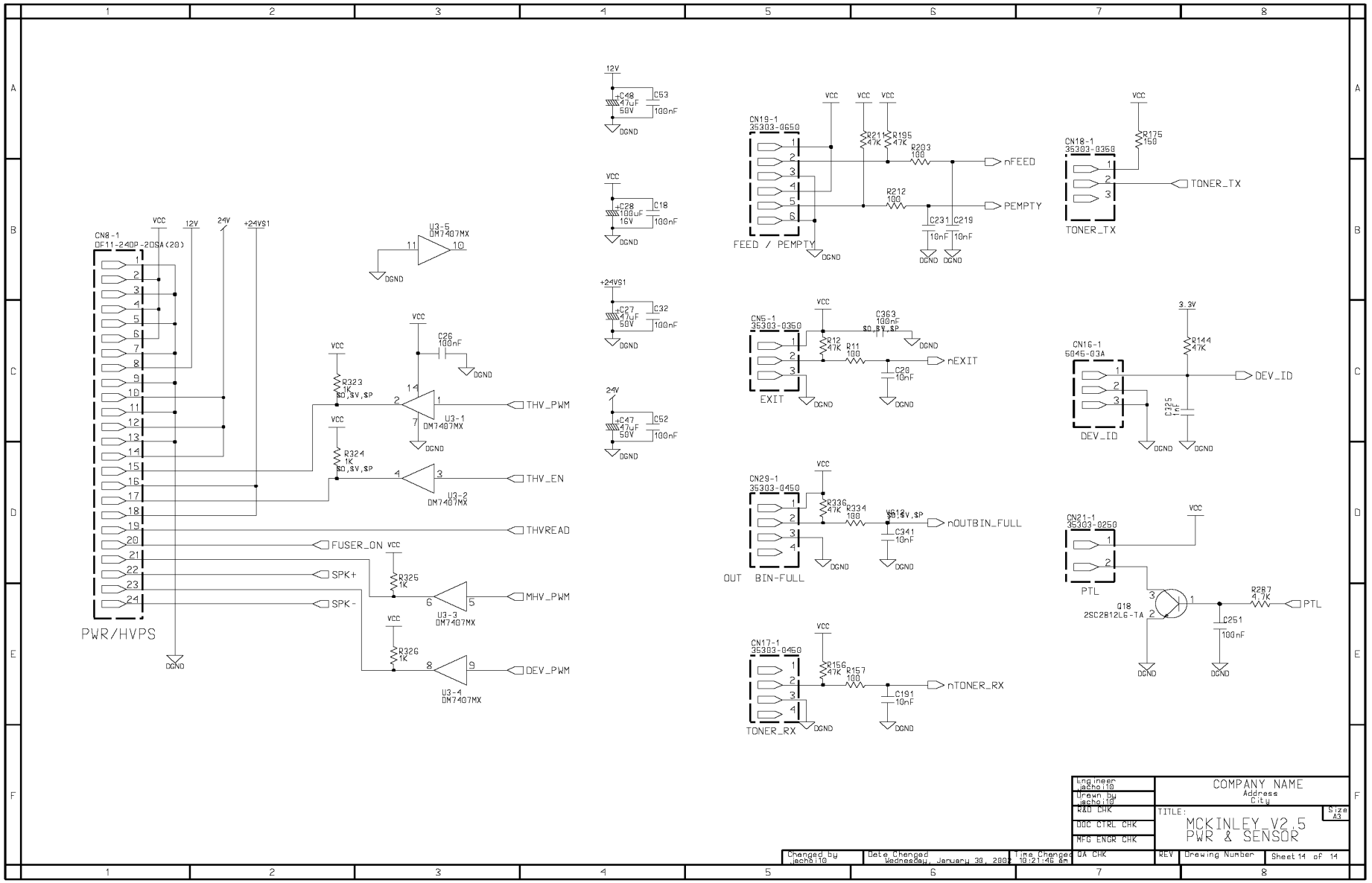

10-2 Схема цепи панели управления

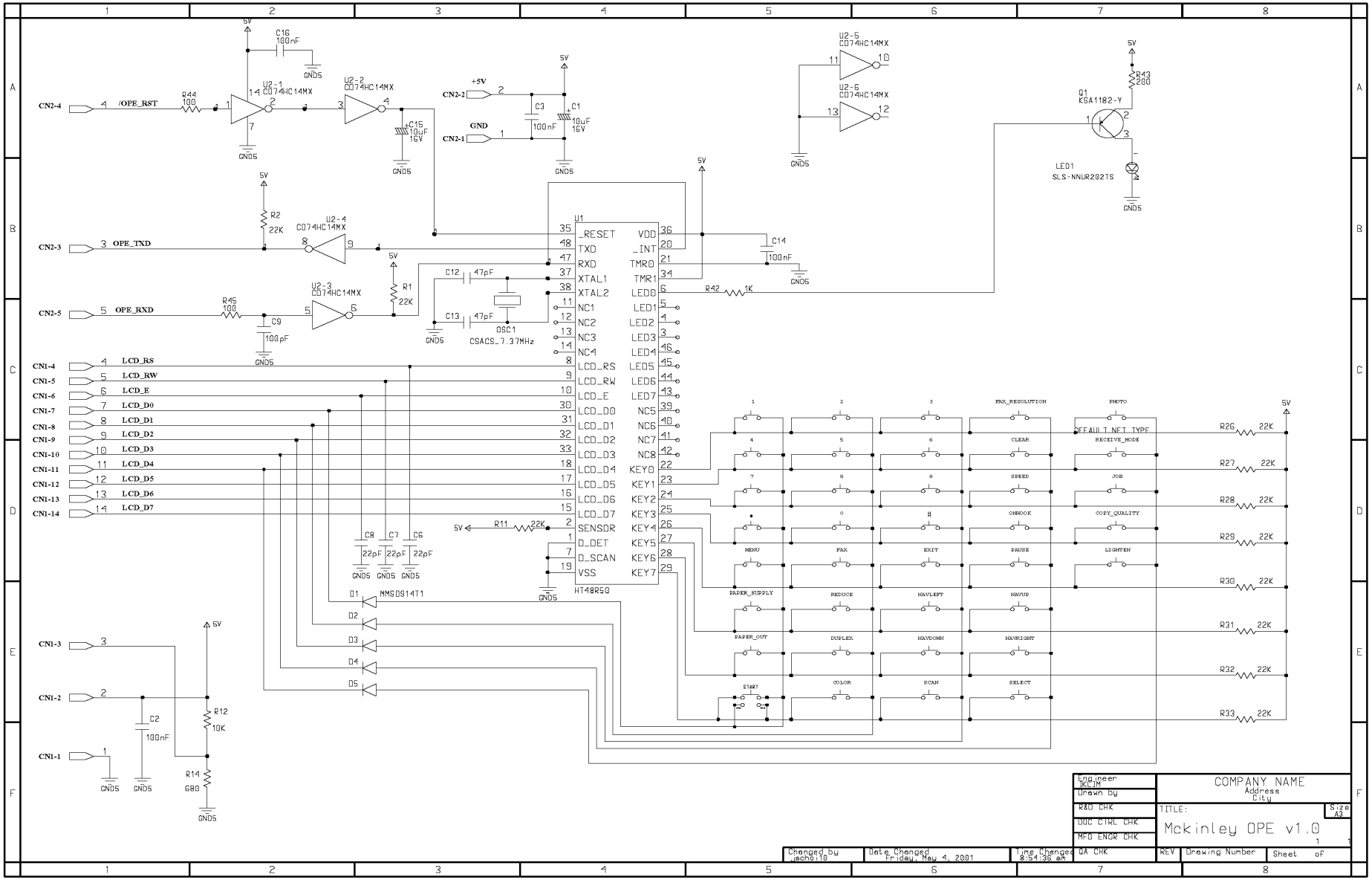

10-3 Схема цепи высоковольтного источника питания (HVPS) (1/2)

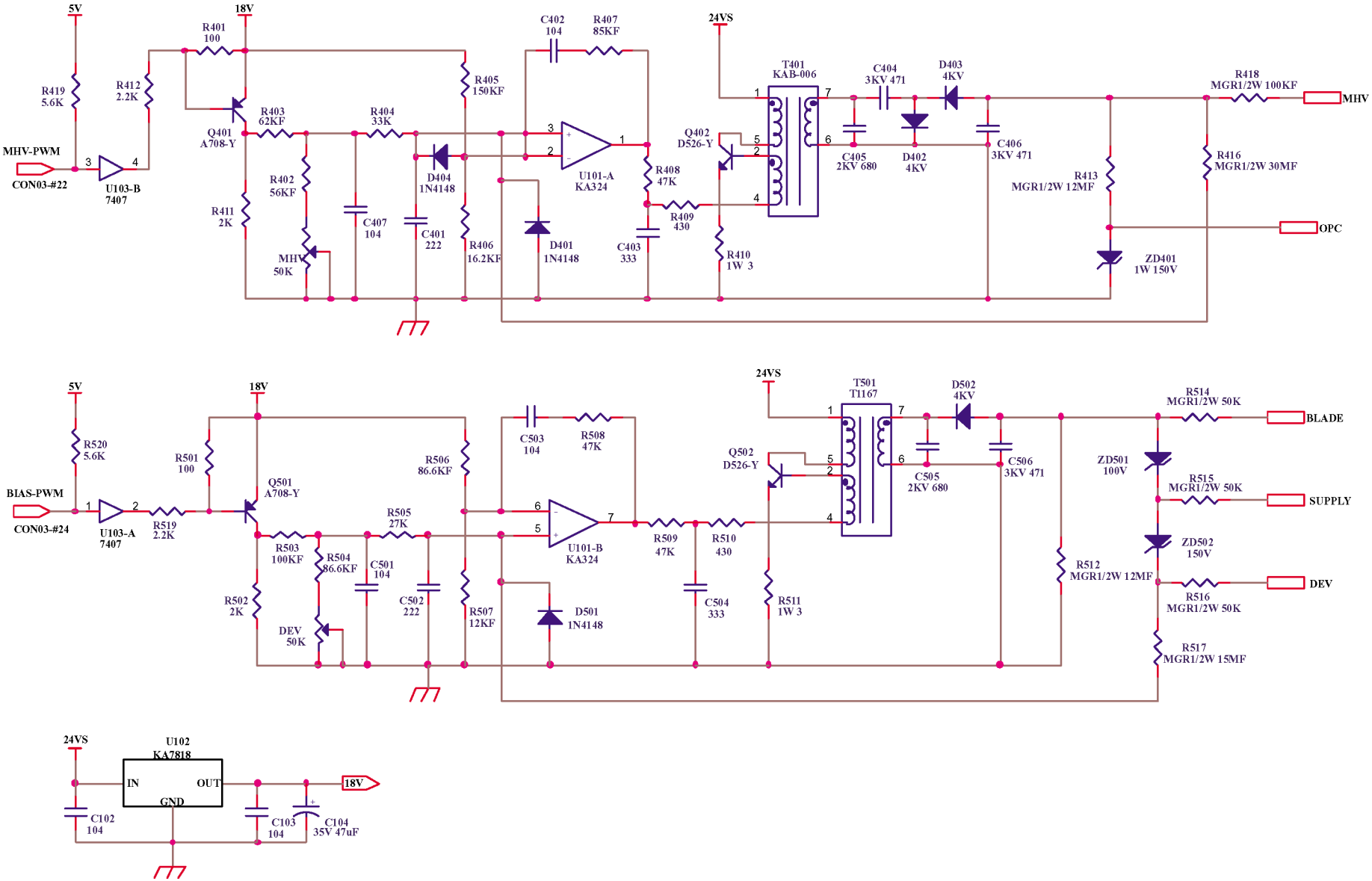

Схема цепи высоковольтного источника питания (HVPS) (2/2)

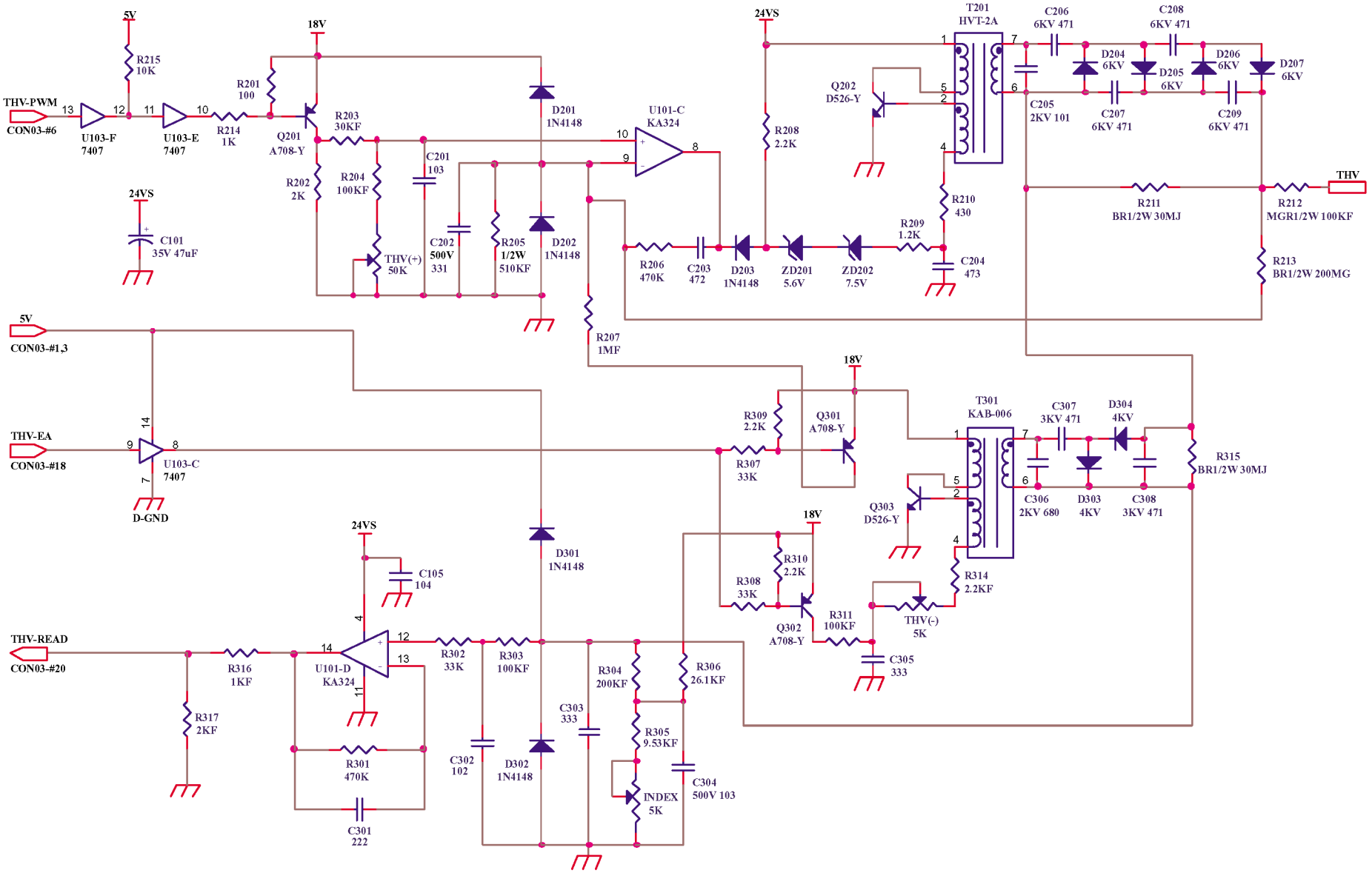

10-4 Схема цепи источника питания с режимом коммутации (SMPS) (110 В)

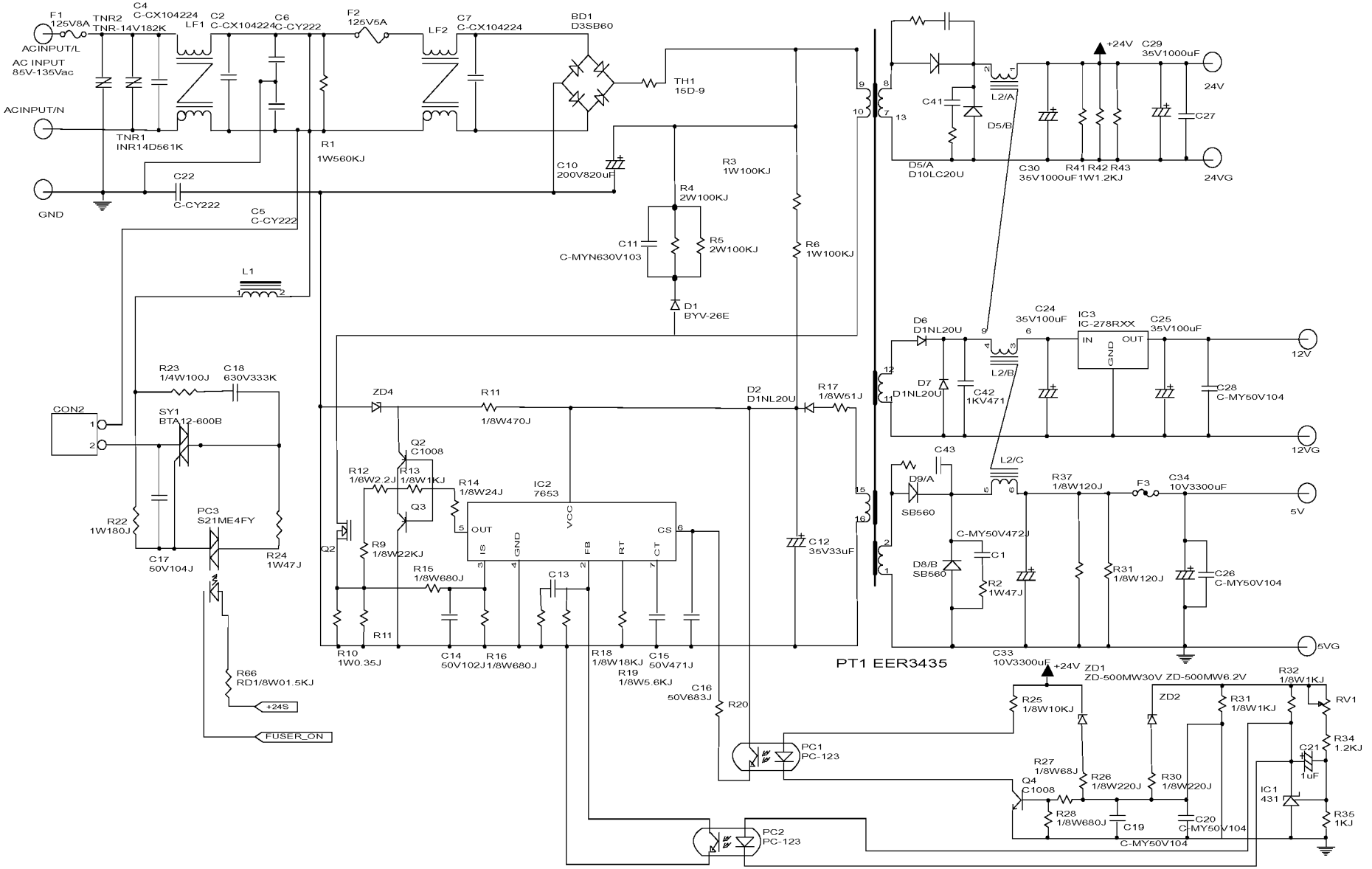

Схема цепи источника питания с режимом коммутации (SMPS) (220 В)

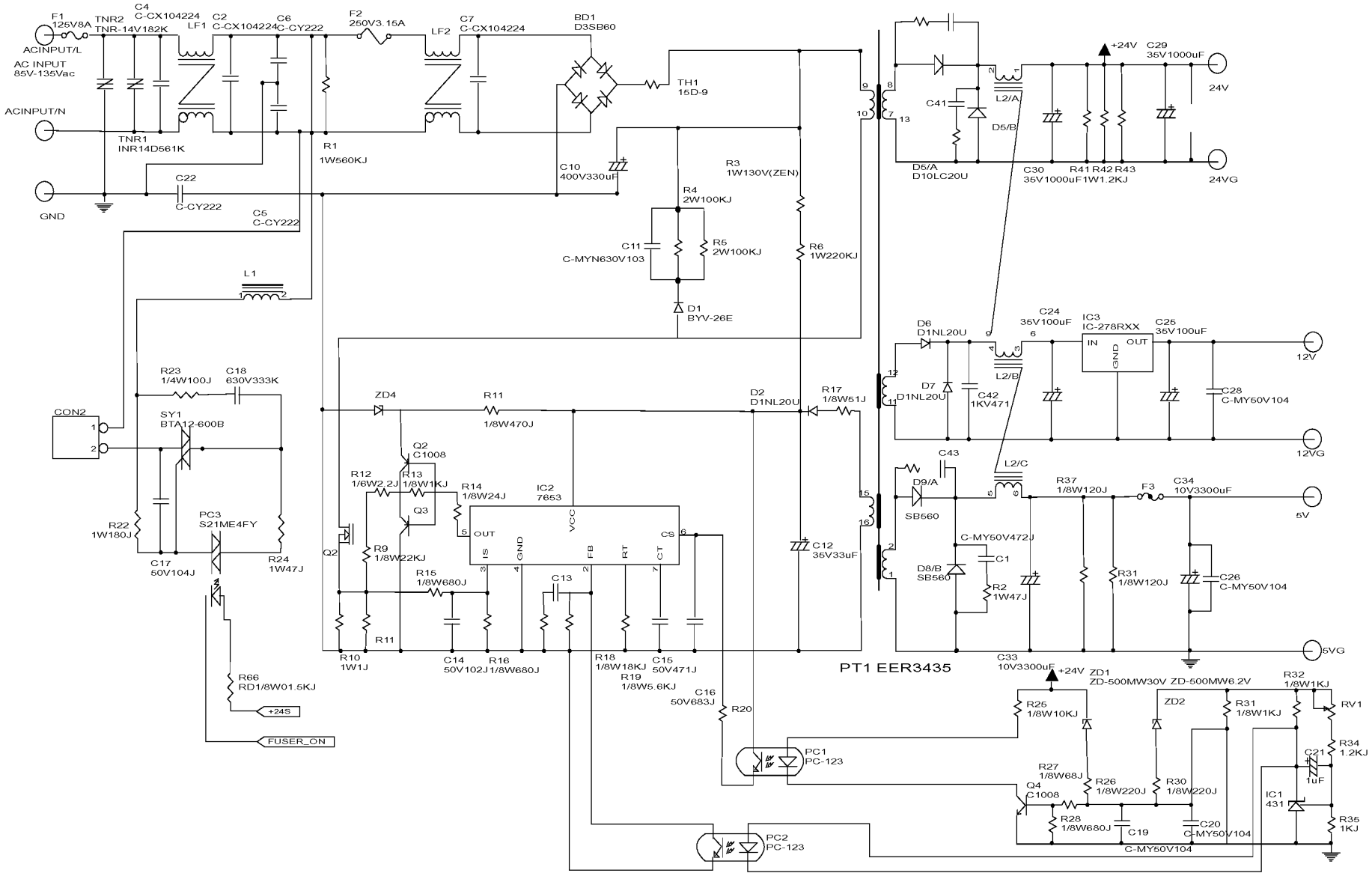

10-5 Схема цепи сканера

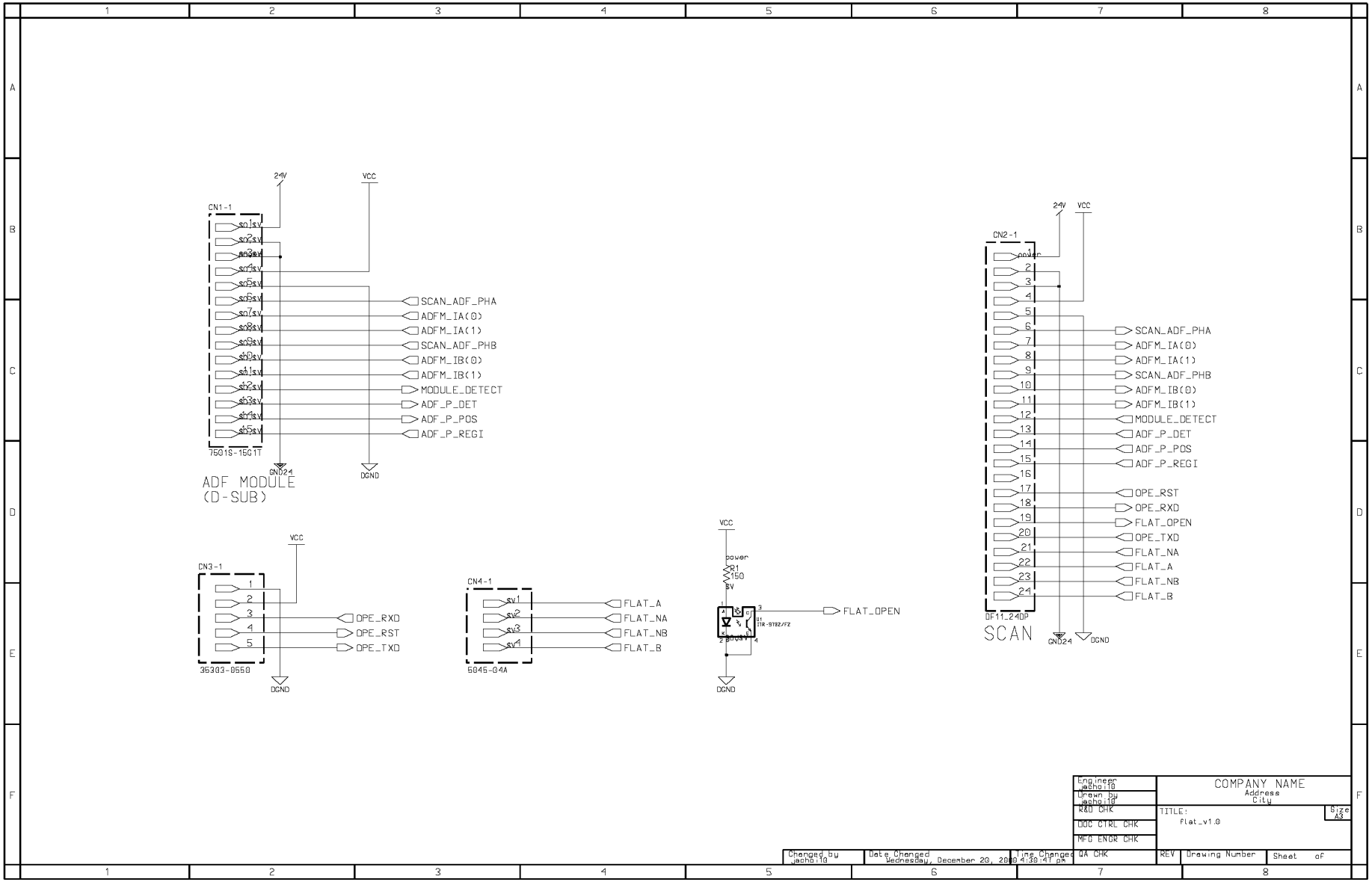

10-6 Схема цепи лампы предварительного переноса

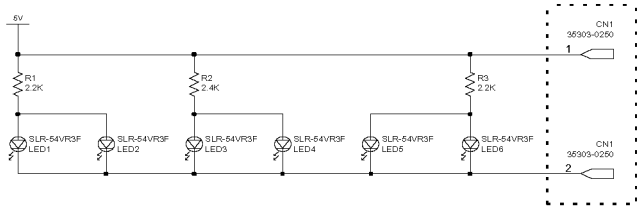

Changed by: dreamS	Date Changed: Friday, April 27, 2001	Time Changed: 3:13:12 pm	Engineer: dreamS Drawn by: dreamS R&D CHK DOC CTRL CHK MFG ENGR CHK QA CHK	COMPANY NAME Address City	TITLE: MCK PTL V1.0 Size: A3 REV / Drawing Number / Sheet of

10-7 Схема цепи датчика

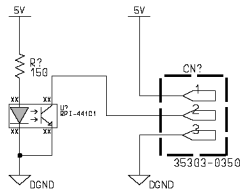

Changed by jacho.ltg	Date Changed Thursday, February 22, 200	Time Changed 3:33:28 pm					

Engineer jacho.ltg	COMPANY NAME
Drawn by jacho.ltg	Address
R&D CHK	City
DOC CTRL CHK	TITLE: sensor
MFG ENGR CHK	Size A3
QA CHK	REV / Drawing Number / Sheet of

10-8 Схема цепи сигнала Toner_Rx

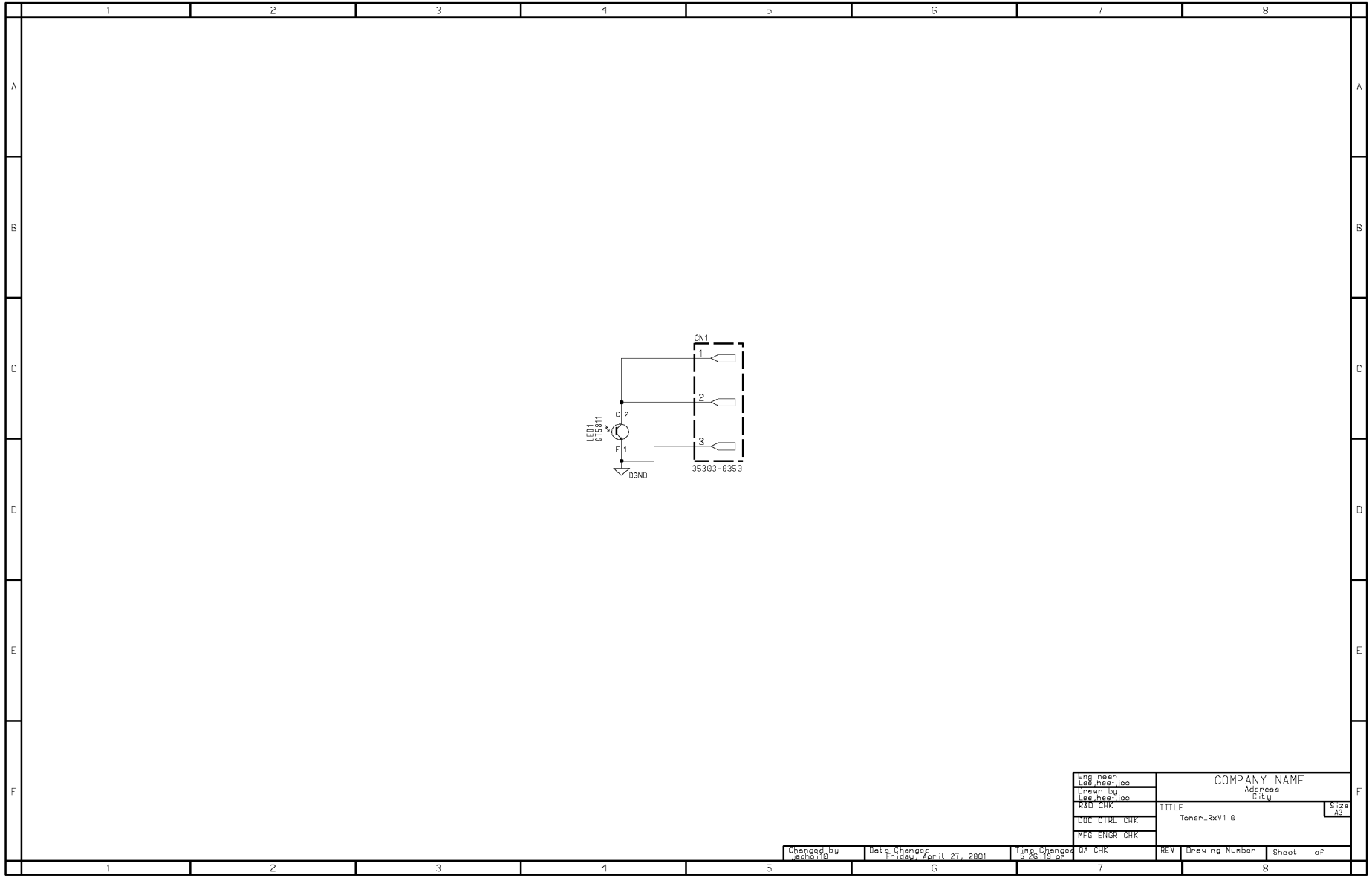

10-9 Схема цепи сигнала Toner_Rx

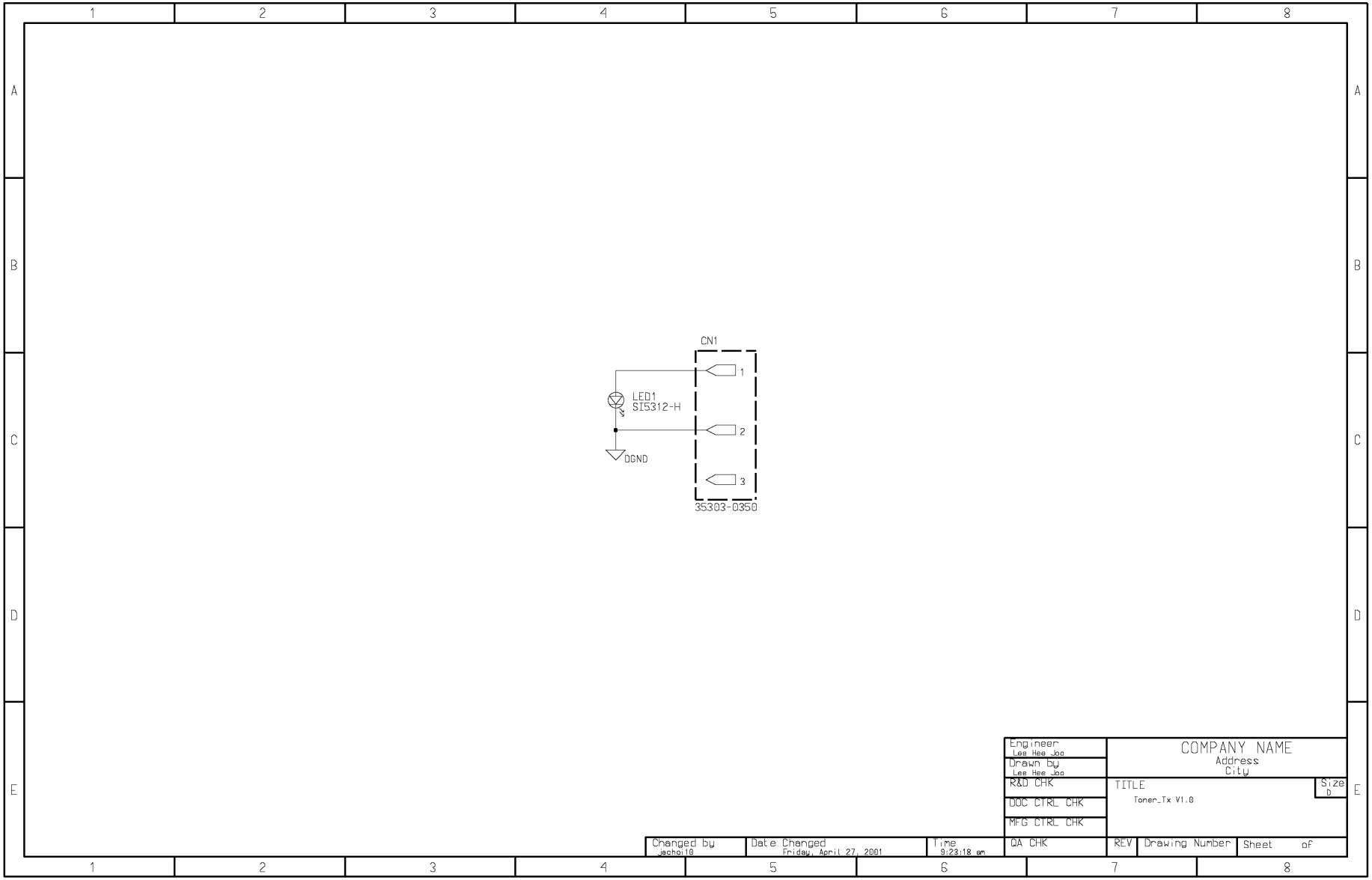

Словарь

1 SCAN LINE DOT#	Число точек на одну линию (строку) сканирования
ADC	Анологово-цифровой преобразователь
Browse	Обзор
Clear Drum	Очистка барабана
CPU BUS Interface Block	Блок интерфейса шины главного процессора
DATA RAM 8 MB x 4 EA	Оперативная память данных 8 Мбайт
DOCUMENT SPEED	Скорость оригинала
DOT#	Число точек
DOWN	Вниз
EDO/FPM DRAM control	Управление динамической оперативной памятью EDO/FPM
Engine Com. I/F	Коммуникционный интерфейс механизма печати
Firmware upgrade	Обновление встроенного программного обеспечения
Interrupt Control (4 External)	Управление прерываниями (4 внешних)
I/O Control (5 bank)	Управление вводом/выводом (5 банков)
Maintenance	Профилактическое обслуживание
Menu	Меню
OPE PANEL INTERFACE	Интерфейс панели управления
OSC 20 MHz	Генератор с тактовой частотой 20 МГц
OSC (Video) 45.3928 MHz	Генератор видео-сигналов с тактовой частотой 45,3928 МГц
OSC 48 MHz	Генератор с тактовой частотой 48 МГц
PARALLEL INTERFACE	Параллельный интерфейс
POWER ON RESET	Перезагрузка при включении питания
PROGRAM ROM 1 MB x 4EA	Программируемое ПЗУ 1 Мбайт
RAM 512K	Оперативная память 512 кбайт
ROM/SRAM/FLASH ROM Control (4 bank)	Управление ПЗУ/оперативной памятью/флэш-ПЗУ (4 банка)
Refresh	Обновить
SDRAM 256K	Оперативная память типа SRAM емкостью 256 кбайт
Select	Выбор
SYSTEM BUS Interface Block (Arbiter)	Блок интерфейса системной шины (арбитр)
Testing OK!	Тестирование выполнено успешно!
Timer	Тактовый генератор
Tone Generator	Генератор тонов
UP	Вверх
Update	Обновить программное обеспечение
USB	Шина USB
USB INTERFACE IC	Микросхема интерфейса USB