XEROX

XE SERIES PARTS GUIDE

XE60/XE62
XE80/XE82/XE84

CONTENTS

[1] Exteriors
[2] Operation Panel
[3] General
[4] Upper Frame Section (No. 1)
[5] Lower Frame Section (No. 2)
[6] Lower Frame (No. 2)
[7] Fusing Unit
[8] Scanner Unit
[9] Carriage 1 Unit
[10] Carriage 2 Unit
[11] Packing Material & Accessories
[12] MCU PWB Unit
[13] Operation Panel PWB Unit
[14] ICU PWB Unit (XE80, XE82, XE84)
{ 15 } Power Supply Unit
• Index

701P14330
9/98

DEFINITION

The definition of each Rank is as follows and also noted in the list

A : Parts necessary to be stocked as High usage parts.
B : Parts necessary to be stocked as Standard usage parts.
C : Low usage parts.
D : Parts necessary for refurbish.
E : Unit parts recommended to be stocked for efficient after sales service.
Please note that the lead time for the said parts may be longer than normal parts.
S : Consumable parts.

Please note that the following parts used in Copier under the same description are classified into A or B Rank depending upon the place used.

Example: Gear made of Metal, Sprocket, Bearing, Belt made of Rubber, Spring clutch mechanism.
A Rank : The parts which may be with the revolution or loading.
B Rank : Parts similar to A Rank parts, but are not included in Rank A.

Because parts marked with "⚠" is indispensable for the machine safety maintenance and operation, it must be replaced with the parts specific to the product specification.

○ Other than this Parts Guide, please refer to documents Service Manual of this model.
○ Please use the 13 digit code described in the right hand corner of front cover of the document, when you place and order.
○ For U.S. only-Use order codes provided in advertising literature. Do not order from parts department.

1 Exteriors

NO.	PARTS CODE	OEM CODE	PRICE RANK	NEW MARK	PART RANK	DESCRIPTION
1	LPLTP0276GCYZ		AK		C	PU EX tray
2	LSOU-0012GCY1		AQ		C	PU tray
3	PGIDM7051XCYZ	038E22360	AG	N	C	Paper guide
4	GCAB-7059XCYZ	802E01010	AT	N	C	Rear cabinet (120V series)
	GCAB-7059XCYA		AX	N	C	Rear cabinet (230V series)
5	XHBSE30P08000		AA	N	C	Screw (3x8)
6	GCAB-7057XCYZ	802E00990	AV	N	C	Rigth Cabinet (120V series)
	GCAB-7057XCYA		AZ	N	C	Rigth Cabinet (230V series)
7	LX-BZ7063XCZZ				C	Screw
8	LSOU-7004XCYZ	050E15070	AM	N	C	Delivery Tray
9	LSOU-7005XCYZ	050E15080	AN	N	C	Derivery extension Tray
10	GCAB-7063XCYZ	802E01030	AK	N	C	Left Cabinet Lower (120V series)
	GCAB-7063XCYA		AL	N	C	Left Cabinet Lower (230V series)
11	CPNLC7028XC35	053E06010	BK	N	E	Operation panel unit (XE-60 120V series)
	CPNLC7028XC36			N	E	Operation Panel unit (XE-60 230V series)
	CPNLC7028XC37			N	E	Operation Panel unit (XE-62 120V series)
	CPNLC7028XC38			N	E	Operation Panel unit (XE-62 230V series)
	CPNLC7028XC31			N	E	Operation Panel unit (XE-80 120V series)
	CPNLC7028XC32			N	E	Operation Panel unit (XE-80 230V series)
	CPNLC7028XC33			N	E	Operation Panel unit (XE-82 120V series)
	CPNLC7028XC34			N	E	Operation Panel unit (XE-82 230V series)
	CPNLC7028XC40			N	E	Operation Panel unit (XE-84 230V series)
12	CCAB-7060XC01	802E00980	AT	N	C	Front Cabinet (120V series)
	CCAB-7060XC02		AT	N	C	Front Cabinet (230V series)
13	XEBSD30P10000		AA		C	Screw (3x10)
14	GCAB-7058XCYZ	802E01000	AV	N	C	Left cabinet (120V series)
	GCAB-7058XCYA		AZ	N	C	Left cabinet (230V series)
15	MLEVP7034XCYZ	120E19140	AD	N	C	Paper size Actuator
16	GCAB-7062XCYZ	802E01020	AK	N	C	Rigth Cabinet Lower (120V series)
	GCAB-7062XCYA		AL	N	C	Rigth Cabinet Lower (230V series)
17	PSHEP7218XCZ1		AG	N	C	Sheet
18	TCAUH1008FCZZ	891E00470	AE		C	Service caution label
19	TLABH0264GCZZ		AC		C	Service man label (230V series)
20	TLABZ0058QSZZ		AD		C	Class 1 Label (230V series)
21	PSTK-0001QSZZ		AN		C	OC stacker (XE-60,XE-80,XE-84)
22	MIING-7010XCYZ		AE	N	C	OC hinge
23	GCOV-7044XCZZ		AV	N	C	Original Cover (XE-60,XE-80,XE-84)
	GCOV-7042XCYZ		AV	N	C	Original Cover (XE-62,XE-82)
24	PSHEZ7219XCZZ		AT	N	C	OC Mat
25	PGLSP7010XCZZ	090E02150	AX	N	B	Original Table glass
26	TLABH7407XCZZ	891E75440	AH		C	Operation Label
27	TLABH7404XCZZ		AH	N	C	Platen Label
28	TLABZ4047FCZZ	891E27220	AC		C	Energy star Label (XE80,XE82 U.S.A only)
501	CSOU-0012GC34		AU	N	E	Paper feed unit (Include No.1~3)
502	CCOV-7044XS51		BA	N	E	Original Cover unit (Include No.21~25)(XE-60/XE-80/XE-84)
	CCOV-7042XS52		BA		E	Original Cover unit (Include NO.21~25)(XE-62,XE-82)

1 Exteriors

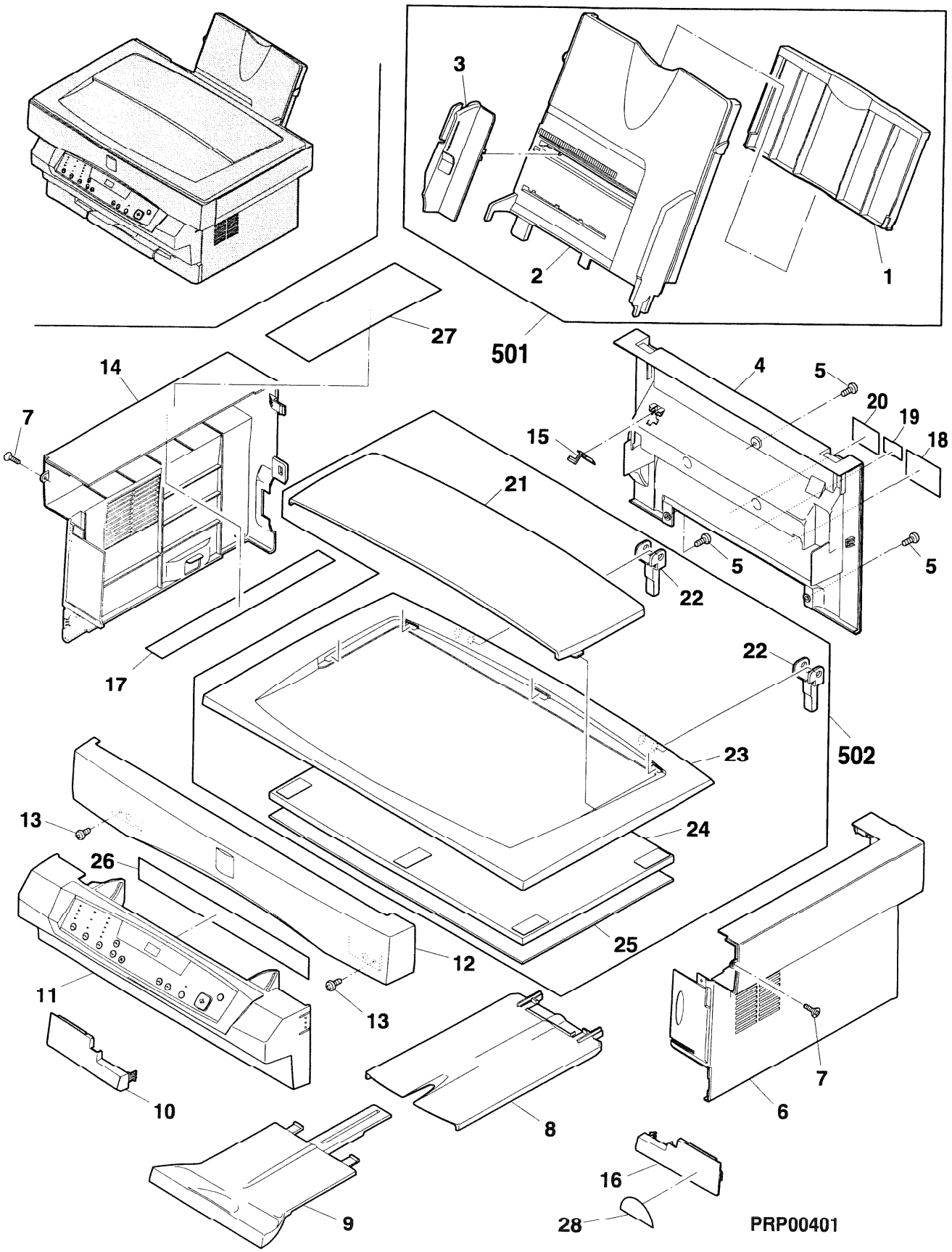
3
2
1
27
501
14
7
4
5
20
19
18
15
21
5
5
22
17
22
502
23
13
24
26
25
12
11
13
7
10
8
6
16
9
28
PRP00401

2 Operation Panel

NO.	PARTS CODE	OEM CODE	PRICE RANK	NEW MARK	PART RANK	DESCRIPTION
1	CPWBF7021WS51		BA	N	E	Operation panel PWB unit (XE-60,XE-62)
	CPWBF7021WS52		BA	N	E	Operation panel PWB unit (XE-80,XE-82,XE-84)
2	DHAi-7005XCZZ	160K55790	AK	N	C	Operation FFC
3	LHLDZ7048XCZZ		AP	N	C	Filter Holder (120V series)
	LHLDZ7048XCZA		AP	N	C	Filter Holder (230V series)
4	XEBSD30P08000	026E6413/	AA		C	Screw (3x8)
5	GCAB-7061XCZZ		AU	N	C	Operation panel Cabinet (120V series)
	GCAB-7061XCZA		AY	N	C	Operation panel Cabinet (230V series)
6	JBTN-0015QSZZ	003N00669	AF	N	C	Clear Key
7	JBTN-0013QSZZ	003N00673	AF	N	C	Copy Key
8	HPNLC7028XCZ2		AR	N	C	Operation Panel (XE-60)
	HPNLC7028XCZ3		AR	N	C	Operation Panel (XE-62)
	HPNLC7028XCZZ		AR	N	C	Operation Panel (XE-80)
	HPNLC7028XCZ1		AR	N	C	Operation Panel (XE-82)
	HPNLC7028XCZ4			N	C	Operation Panel (XE-84)
9	JBTN-7025XCZZ		AG	N	C	Operation Key R
10	JBTN-7026XCZZ		AK	N	C	Operation Key L
11	PSHEZ7227XCZZ		AF	N	C	Cable cover sheet
	(Unit)					
901	CPNLC7028XC35	053E06010	BK	N	E	Operation Panel unit (XE-60 120V series)
	CPNLC7028XC36			N	E	Operation Panel unit (XE-60 230V series)
	CPNLC7028XC37			N	E	Operation Panel unit (XE-62 120V series)
	CPNLC7028XC38			N	E	Operation Panel unit (XE-62 230V series)
	CPNLC7028XC31			N	E	Operation Panel unit (XE-80 120V series)
	CPNLC7028XC32			N	E	Operation Panel unit (XE-80 230V series)
	CPNLC7028XC33			N	E	Operation Panel unit (XE-82 120V series)
	CPNLC7028XC34			N	E	Operation Panel unit (XE-82 230V series)
	CPNLC7028XC40			N	E	Operation Panel unit (XE-84 230V series)

2 Operation Panel

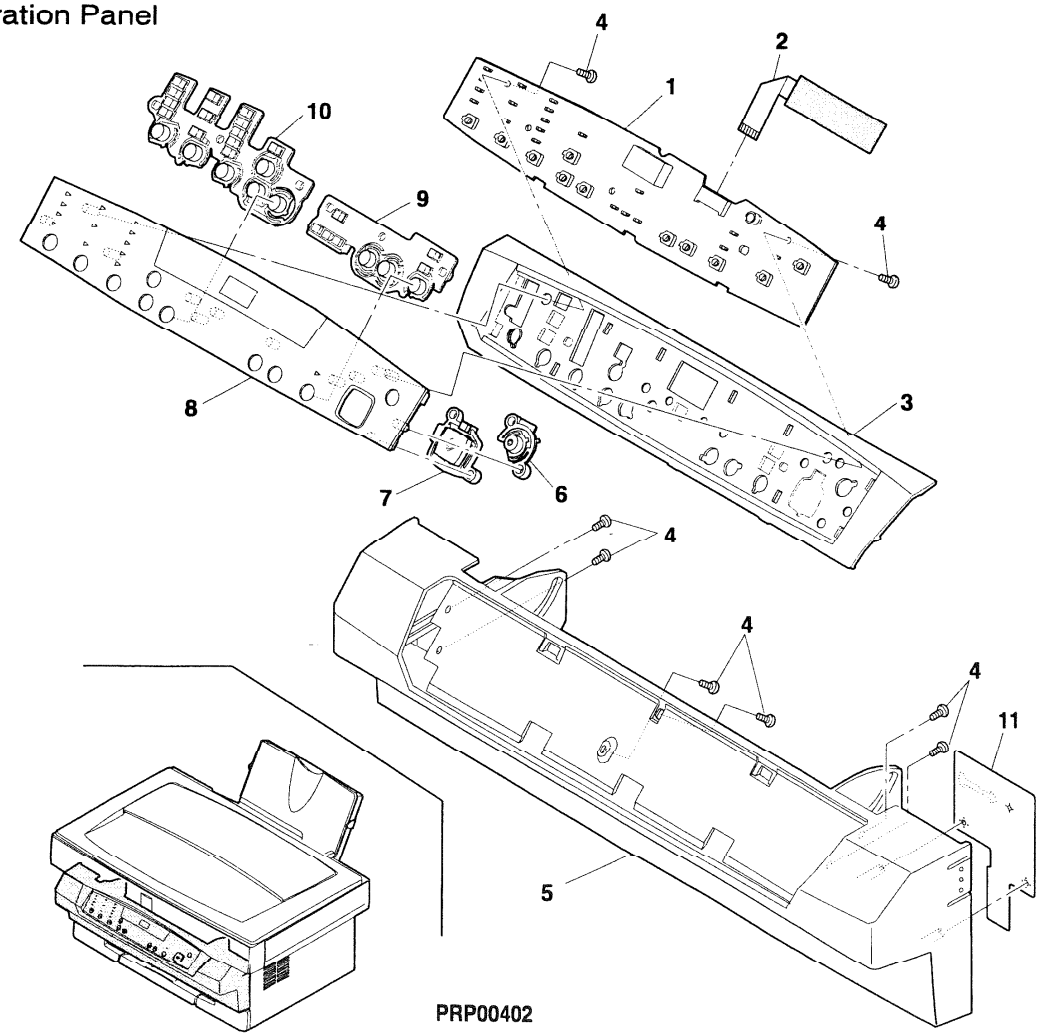

PRP00402

3 General

NO.	PARTS CODE	OEM CODE	PRICE RANK	NEW MARK	PART RANK	DESCRIPTION
1	NGERH0076GCZZ		AC		C	DV idle gear B
2	NGERH7061XCZZ		AG	N	C	DV idle gear A
3	MSPRT0307GCZZ		AA		C	Lock lever spring
4	MLEVP7033XCZZ	011E09070	AG	N	C	Release Lever
5	NGERH0096GCZZ		AC		C	PU idle gear C
6	NGERH0173GCZZ		AD		C	PU idle gear B2
7	NGERH0094GCZZ		AC		C	PU idle gear A
8	PCOVP0086GCZZ		AD		C	PU gear cover
9	XEBSD30P08000	026E64137	AA		C	Screw (3×8)
10	LPLTM0159GCZZ		AD		C	Gear plate
11	XEPSD30P08X00	026E64270	AA		C	Screw (3×8X)
12	NGERH0071GCZZ		AC		C	Motor idle gear
13	NGERH0072GCZ1		AD		C	DR idle gear A
14	NGERH0077GCZZ	007E55490	AC		C	FU clutch gear A
15	LX-WZ2011SCZZ		AA		C	Washer (ϕ6.2-12 t=0.25)
16	NGERH0078GCZZ	007E55480	AC		C	FU clutch gear B
17	MLEVP0037GCZZ		AB		C	FU clutch lever
18	NGERH0171GCZ1		AE		C	FU idle gear
19	DUNTW0154PS20		BK	N	E	Fusing unit (120V series)
	DUNTW0154PS21		BK	N	E	Fusing unit (230V series)
20	LSTPP0022GCZZ		AD		C	DV protect
21	PSHEZ7230XCZZ		AD		C	Delivery tray sheet
22	MLEVP7028XCZZ	011E09040	AG	N	C	DV Press Lever
23	TLABZ0205GCZZ		AC		C	Laser Label (230V series)

3 General

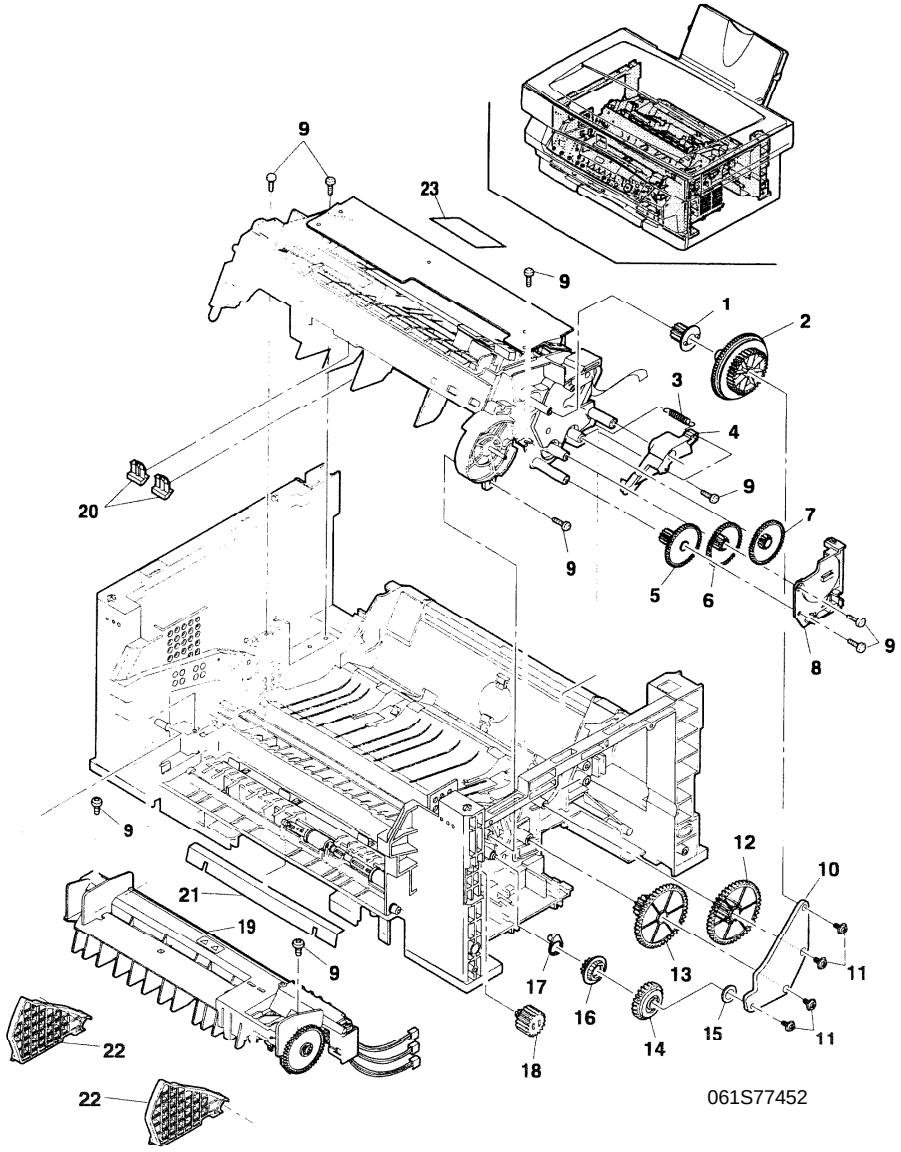

4 Upper Frame Section

NO.	PARTS CODE	OEM CODE	PRICE RANK	NEW MARK	PART RANK	DESCRIPTION
1	RPLU-0004GCZZ		AN		B	PU solenoid 24V
2	MSPRC0159GCAZ		AB		C	Release lever spring
3	XEBSD30P08000	026E6413/	AA		C	Screw (3×8)
4	MLEVP0088GCZZ	011E07890	AC		C	PE lever
5	PSHEP0320GCZ1		AF		C	Shading sheet 1
6	MLEVP0046GCZZ		AE		C	Sleeve release lever
7	XHBSD30P06000		AA		C	Screw (3×6)
9	LPLTM0273GCZZ		AF		C	MM heat sink
10	DIIAi-0139GCZZ		AF		C	MM harness
11	RMOTN0039GCZZ	127E11880	AZ		B	Main motor
12	NGERH0080GCZ1	007E55460	AE		C	PU roller gear
13	LX-BZ0187FCZ1	026E46000	AA		C	Screw (3×8KS)
14	MSPRC0293GCZZ		AB		C	DV press spring
15	MSPRC0149GCAZ		AA		C	DV press spring
16	LFiX-0003GCZZ		AC		C	DV fixer plate
17	NROLP0112GCZZ	022E22650	AR		C	PU roller N
18	LBOSZ0058GCZ1	022E22660	AE		C	PU roller boss
19	PPiPP0006GCZ2	016E14130	AC		C	R sleeve
20	MSPRT0137GCAZ	809E14150	AC		C	PU clutch spring
21	PPiPP0003GCZ1	016E14120	AC		C	PU clutch sleeve
22	LX-WZ0017GCZZ		AC		C	Washer (T0.133)
23	LX-WZ0018GCZZ		AC		C	Washer (T0.25)
24	LX-WZ0019GCZZ		AC		C	Washer (T0.5)
26	PSPAZ0049GCZZ		AC		C	Spacer (T0.1)
28	RCORF7013XCZZ		AH		C	Core (NQF25/20)
29	PMLT-0124GCZZ		AB		C	FFC Protector
30	CPWBF0072VS52		AQ	N	E	Toner sensor PWB unit
31	LPLTM0181GCZZ		AC	N	C	Toner sensor plate
32	PCOVP0083GCZZ		AK	N	C	Toner sensor cover
	(Unit)					
901	CFRM-0044PS63		BV	N	E	Upper Frame unit (120V series)
	CFRM-0044PS64		BV	N	E	Upper Frame unit (230V series)

4 Upper Frame Section

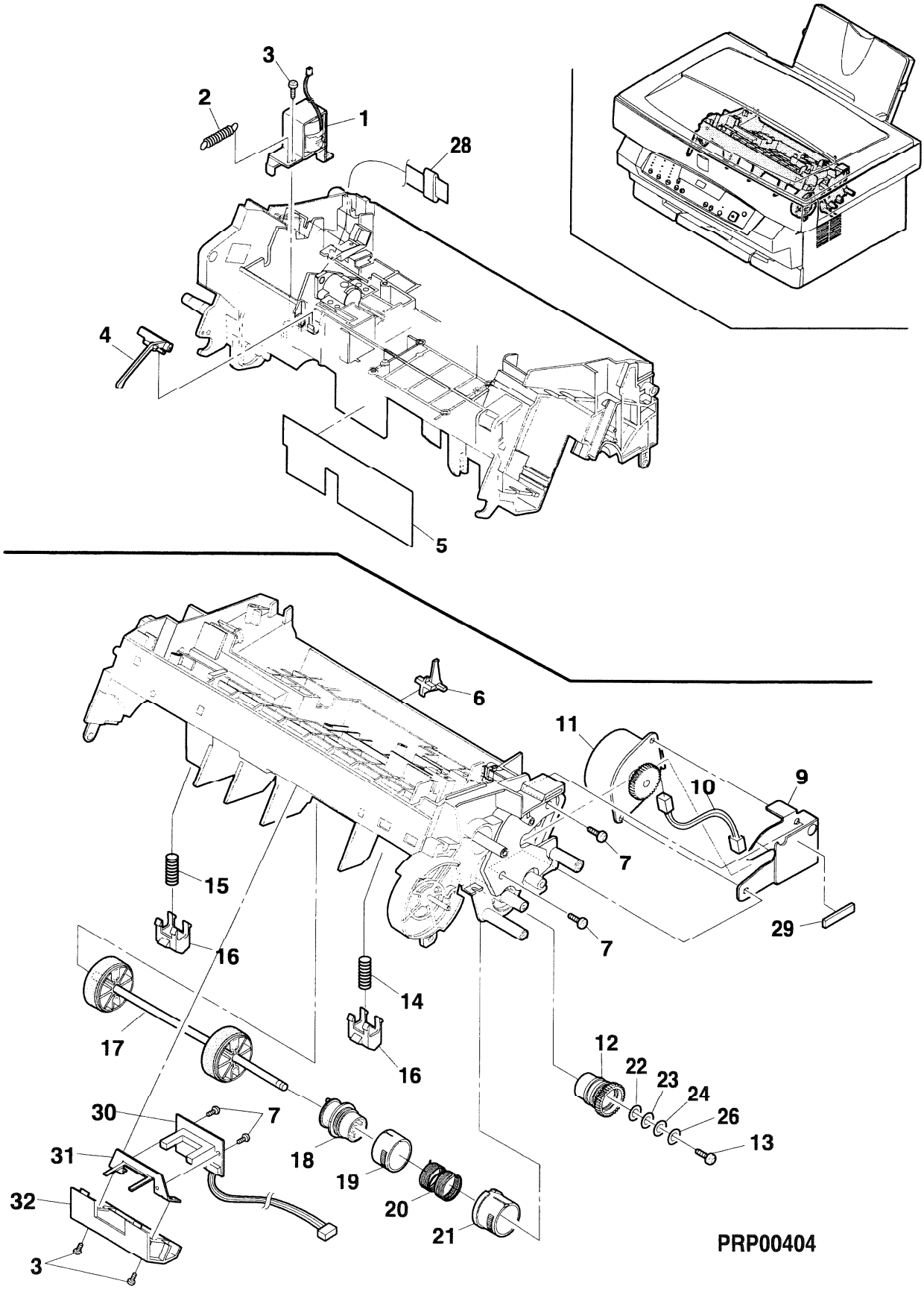

5 Lower Frame Section(No.1)

NO.	PARTS CODE	OEM CODE	PRICE RANK	NEW MARK	PART RANK	DESCRIPTION
1	NROLP0106GCZ2		AW		C	TR Roller
2	NBRGP0105GCZZ	013E14320	AC		C	TR bearing L
4	NBRGP0104GCZZ	013E14310	AC		C	TR bearing R
5	NGERH0169GCZZ	007E55470	AC		C	TR gear
6	MSPRC0155GCA2		AB		C	TR spring (silver)
7	LPLTM0275GCZ1		AK	N	C	Lift Plate
8	MSPRC0305GCZ2		AD		C	Tray spring
9	PSHEZ0190GCZZ		AC		C	Tray sheet J
10	CPLTP7071XS51		AH	N	E	Separator (Include No.51)
11	MLEVP0038GCZZ		AC		C	DR lock lever R
12	MSPRC7150XCZZ		AB	N	C	Separator Spring
13	MSPRP0158GCAZ		AB		C	DR lock spring
14	LX-WZ0044FCZZ		AA		C	Washer (CS-3)
15	MLEVP7031XCYZ	011E09060	AG	N	C	Tray Lock Lever
16	MLEVP0091GCZZ		AC		C	SB release lever
17	XWHSD30-05080		AA		C	Washer (3W)
18	XEBSD30P30000		AA		C	Screw (3x30)
19	XPSSJ20-14000		AA		C	Spring pin (2x14)
20	QSLP-0032GCZZ		AD		C	DV terminal
21	XEBSD30P08000	026E6413/	AA		C	Screw (3x8)
22	DUNTK0152PS11			N	E	DV bias Resistor unit
23	MSPRC0313GCZ1		AB		C	DV bias spring
24	XWSSD30-07000		AA		C	Washer
25	QSLP-0028GCZZ		AE		C	Earth terminal
26	MSPRP0304GCZZ		AC		C	TR terminal spring
27	MLEVP7030XCZZ		AD	N	C	Pin Actuator
28	PCOVP0038GCAZ		AA		C	Terminal cover
29	MSPRC0133GCA1		AB		C	MC terminal spring
32	NGERH7060XCZZ	007E59420	AE	N	C	FU Gear 15T
33	NROLM7045XCZZ	022E23300	AG	N	C	Delivery Roller
35	LPLTM0163GCZZ	015E67270	AE		C	Discharger plate
36	PGIDM0078GCZZ		AM		C	FU guide
37	MLEVP0039GCZZ		AC		C	DR lock lever L
38	MSPRC0312GCZZ		AB		C	FU GND spring
39	LFRM-7043XCZZ		BB	N	C	Lower Frame
40	XEBSD30P18000		AA		C	Screw (3x18)
43	NBRGP0106GCZZ	013E14330	AF		C	FU bearing
44	NROLP0109GCZZ	022E22690	AY		C	FUP roller
45	MLEVF7027XCZZ		AF	N	C	Release Lever R
46	LX-BZ7057XCZZ	026E72690	AC	N	C	Screw
47	MSPRC7152XCZZ	809E18520	AB	N	C	Release Lever Spring
48	MLEVF7026XCZZ		AF	N	C	Release Lever L
49	LPLTM7066XCZZ	015E72570	AG	N	C	Scraper
50	MSPRC7151XCZZ	809E18510	AB	N	C	Spring
51	PMLT-0118GCZZ		AB		C	Noise buffer sheet

5 Lower Frame Section(No.1)

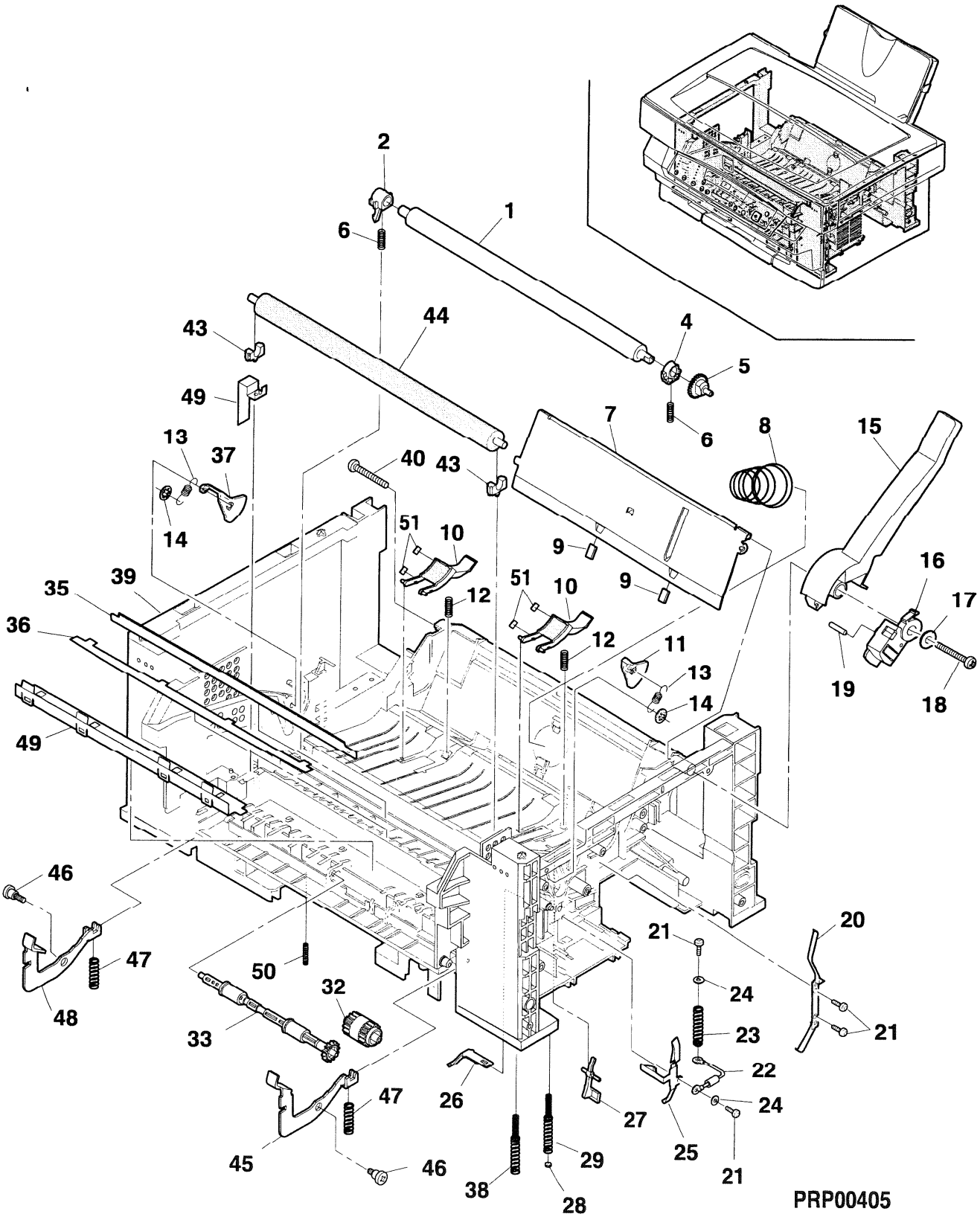

6 Lower Frame(No.2)

NO.	PARTS CODE	OEM CODE	PRICE RANK	NEW MARK	PART RANK	DESCRIPTION
1	CPWBX7016WS51		BT	N	E	MCU PWB unit
2	XEBSE30P08000	026E64180	AA		C	Screw (3x8)
3	RMOTZ7026XCZZ		AY	N	B	Fan Motor
4	XHBSD30P28000			N	C	Screw (3x28)
5	PSLDM7027XCZ1		AL	N	C	PWB Shield plate
6	XEBSD30P08000	026E6413/	AA		C	Screw (3x8)
7	CPWBF7019WS51		BE	N	E	High voltage PWB unit
8	PSHEP7220XCZZ		AD	N	C	Shield Sheet
9	LPLTM7070XCZC		AQ	N	C	Bottom Plate (XF-60,XF-62)
	LPLTM7070XCZE		AQ	N	C	Bottom Plate (XE-80,XE-82,XE-84)
10	GLEGG0003GCZZ		AB		C	Rubber foot
11	XHBSD30P06000		AA		C	Screw (3x6)
12	DHAi-7011XCZZ	160K55800	AF	N	C	Power Supply PWB FFC
13	DHAi-7010XCZZ	162K50360	AG	N	C	ICU-FFC (XE-80,XE-82,XE-84)
14	CPWBF7018WS52		CF	N	E	ICU PWB unit (XE-80,XE-82,XE-84)
15	CPWBF7022XC33	160K55740	BM	N	E	Power Supply unit (120V series)
	CPWBF7022XC34	160K55750	BP	N	E	Power Supply unit (230V series)
16	XBPSN40P06K00		AA		C	Screw (4x6K)
17	LANGT7147XCZ1		AL	N	C	Main PWB Shield angle

6 Lower Frame(No.2)

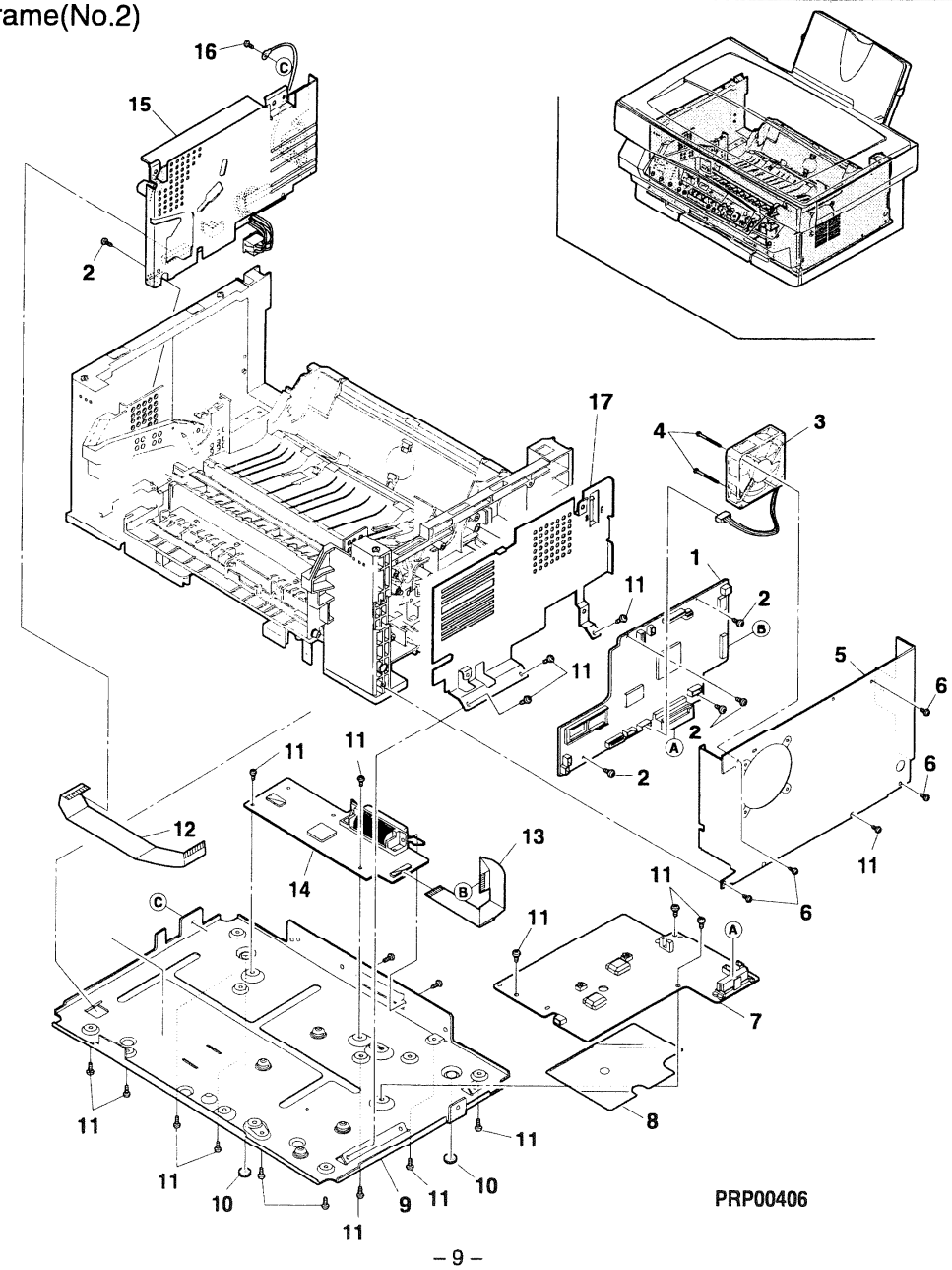

7 Fusing unit

NO.	PARTS CODE	OEM CODE	PRICE RANK	NEW MARK	PART RANK	DESCRIPTION
1	PCOVP7036XCZZ		AV	N	C	Fusing Cover
2	TLABH0366GCZZ		AC		C	H.THP Label
3	XNGSN30-18000		AC		C	Nut (M3)
4	QSLP-0029GCZZ		AD		C	FU terminal
5	XBPSN30P06KS0		AA		C	Screw (3x6KS)
6	NGERH0174GCZZ		AD		C	PO idle gear
7	XEPSD30P06X00	026E64260	AA		C	Screw (3x8X)
8	MSPRT0308GCZZ		AA		C	FU separator spring
9	PTME-0022GCZZ		AF		C	Separator pawl
10	MSPRT7153XCZZ		AC		C	FU roller spring 809E14160
11	NROLP0093GCZZ	022E22670	AC		C	FU roller-B
12	RDTCT0014GCZZ		AP		B	Thermistor
⚠ 13	CHLDZ0040PS74			N	E	Fuse Ass'y
14	XEBSD30P08000	026E64137	AA		C	Screw (3x8)
15	XEBSD30P10000		AA		C	Screw (3x10)
16	MLEVP7029XCZZ	011E09050	AE	N	C	PO Actuator
17	CPWBF1177DS61		AH	N	E	POD PWB unit
18	PBARM0001GCA1		AD		C	FU bar
19	LX-BZ3004SC0B		AA		C	Screw (3x4X)
20	XWVUW30-04000		AA		C	Washer (3W)
21	LX-BZ0030GCZZ		AB		C	Screw (3x5)
⚠ 22	QFS-T0005GCZZ		AQ		A	Fuse
23	PSHEP0161GCZ1		AC		C	FU sheet C
24	NBRGC0035GCZ1		AE		C	FU bearing R
25	NGERH0083GCZZ		AC		C	Fusing gear (27T)
26	NROLM0108GCZZ		AW		C	FU roller
27	NBRGP0082GCZZ		AB		C	FU bearing
28	QSLP-0030GCZZ		AD		C	AC terminal C
29	RLMPU0021GCZZ		AX		B	FU lamp (120V series)
	RLMPU0022GCZZ		AW		B	FU Lamp (230V series)
30	XBPSN30P05K00		AA		C	Screw (3x5K)
31	DHAi-7008XCZZ		AH	N	C	Lamp Harness (120V series)
	DHAi-7009XCZZ		AG	N	C	Lamp Harness (230V series)
32	MSPRT0318GCZZ		AA		C	PF guide Spring
33	NROLP0113GCZZ		AD		C	PU guide roller
34	LBNDJ0037FCZ1		AA		C	Wire band
	(Unit)					
901	DUNTW0154PS20		BK	N	E	Fusing unit (120V series)
	DUNTW0154PS21		BK	N	E	Fusing unit (230V series)

7 Fusing unit

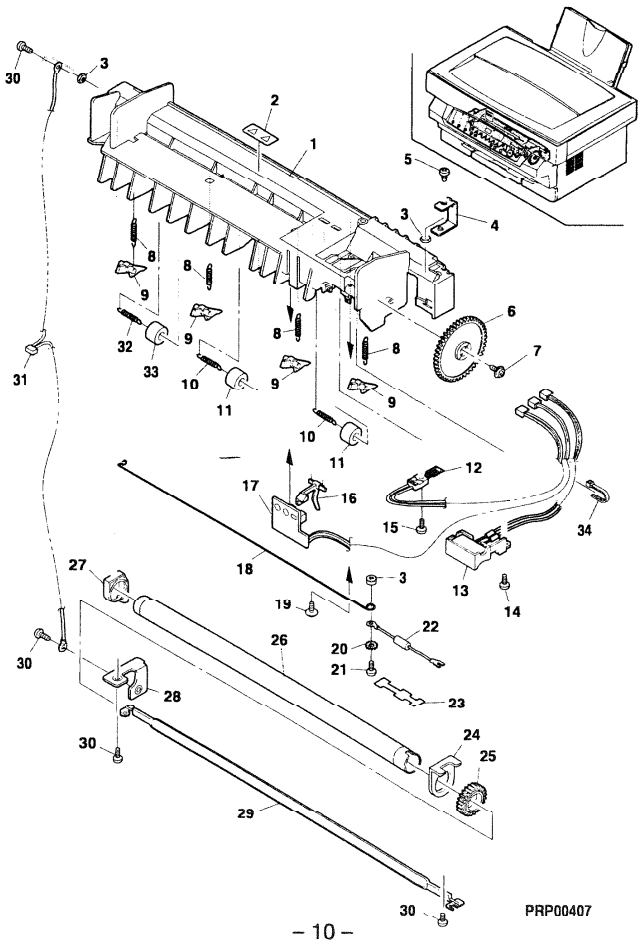

8 Scanner unit

NO.	PARTS CODE	OEM CODE	PRICE RANK	NEW MARK	PART RANK	DESCRIPTION
1	PBOX-7004XCZ1		AK	N	C	Dark Box
2	XHBSD30P06000		AA		C	Screw (3x6)
3	NSFTZ7067XCZZ			N	C	Slide Shaft
4	PWiR-7006XCZZ	117K32320	AR	N	C	MB wire
5	CSLiF7014XC31		BE	N	E	Carriage unit 1
6	CSLiP7015XC31		BC	N	E	Carriage unit 2
7	LRALM7012XCZZ		AE	N	C	Guide Rail
8	PGUMS7023XCZZ		AB	N	C	Table glass Rubber
9	XHBSD30P04000		AA		C	Screw (3x4)
10	DHAi-7003XCZZ	160K55780	AF	N	C	CCD PWB FFC
11	DUNTK7470XCZZ	160K55810	BB	N	E	Inverter PWB unit
12	PSHEP7221XCZZ		AE	N	C	PWB sheet
13	CSW-M7039XS61		AN	N	B	Micro Switch unit
14	XHBSD26P06000		AA		C	Screw (2.6x6)
15	DHAi-7004XCZZ	152P05691	AC	N	C	Inverter PWB Harness
16	LX-BZ7062XCZZ		AA	N	C	Screw
17	NBRGC0074GCZZ		AE		C	Bearing
18	LX-BZ7059XCZZ		AB	N	C	Screw
19	NPLYZ7036XCZZ		AM	N	C	Winding pulley
20	LX-BZ7058XCZZ		AC	N	C	Screw
21	NSFTZ7066XCZ1			N	C	Winding Drive Shaft
22	XPSSJ30-10000		AA		C	Spring Pin
23	NPLYZ7035XCZZ		AG	N	C	Winding Drive Pulley
24	NBLTT7028XCZZ	023E17760	AG	N	C	MB Drive Belt
25	DHAi-7001XCZZ	152P05690	AL	N	C	HP-SW Harness
26	LFRM-7044XCZZ		AK	N	C	Frame R
27	LFRM-7039XCZZ		AX	N	C	Main Frame
28	RMOTP0011QSZZ	127N00970	BA		B	Mirror Motor
29	CPLTM7069XC01		AH	N	C	Motor Fixing Plate
30	XRESP40-06000	028E12150	AA		C	E type ring (4mm)
31	LX-WZ2011SCZZ		AA		C	Washer
32	NGERH7059XCZZ	007E59410	AH	N	C	Mirror Motor idle Gear
33	MSPRT7148XCZZ	809E18530	AC	N	C	Belt Tension Spring
34	NPLYZ7037XCZZ		AG	N	C	Pulley
35	XRESP50-06000	354W20952	AA		C	E type ring (5mm)
36	CPLTM7067XC01		AG	N	C	Pulley Fixing Plate
37	CPLTM7068XC01		AG	N	C	Pulley Fixing Plate
38	VHPGP1A71A1-1	107E07470	AG		B	Photo sensor (GP1A71A1)
39	XBTSD40P06000		AA		C	Screw (4?x?6)
41	LBNDJ0037FCZ1		AA		C	Wire band (T18S)
42	CDAiU0008RS52	062E09060	BR	N	E	Lens base unit
43	LFRM-7045XCZZ		AK	N	C	Frame L
44	RCORF1043LCZZ		AM		C	Core (SSC-33.5-12)
45	PTPEZ7052XCZZ		AA		C	Tape (8-25)
46	PWiR-7007XCZZ		AQ	N	C	MB wire B
47	XWHSD40-08100		AA		C	Washer

8 Scanner unit

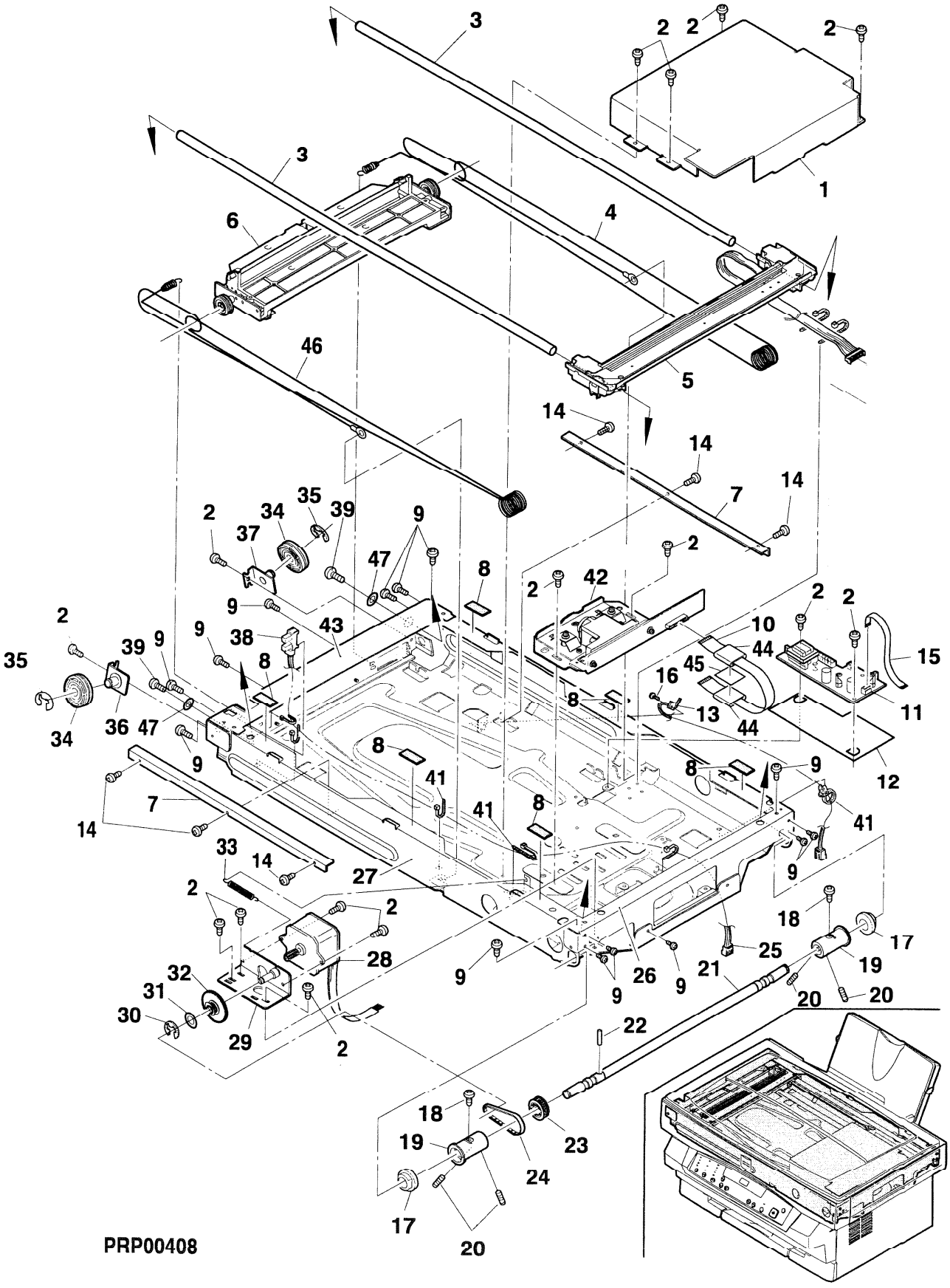

9 Carriage 1 unit

NO.	PARTS CODE	OEM CODE	PRICE RANK	NEW MARK	PART RANK	DESCRIPTION
1	PHOG-7015XCZZ		AE	N	C	Lamp Tarminal Protect Sheet L
2	RLMPZ7015XCZZ		AU	N	B	Lamp
3	PSHEP7223XCZZ		AA	N	C	Protect Sheet
4	DHAi-7002XCZZ		BA	N	C	Lamp Harness
5	XUBSD20P05000		AA		C	Screw (2x5)
6	LDAi-7018XCZZ		AL	N	C	Lamp Base
7	VHPBS520///-1		AL		B	Photo transistor (BS520)
8	MSLiF7014XCZZ		AH	N	C	Carriage 1
9	XBPSD20P16XS0			N	C	Screw (2x16KS)
10	LFiX-7037XCZZ		AD	N	C	Wire Holder
11	LDAi-7016XCZZ		AE	N	C	Carriage 1 base L
12	PMiR-7035XCZZ	062E09070	AL	N	B	Mirror 1
13	MSPRP7149XCZZ		AC	N	C	Mirror 1 Holder Spring
14	LDAi-7017XCZZ		AE	N	C	Carriage 1 Base R
15	PHOG-7016XCZZ		AE	N	C	Lamp Terminal Protect Sheet R
	(Unit)					
901	CSLiF7014XC31		BE	N	E	Carriage 1 unit

9 Carriage 1 unit

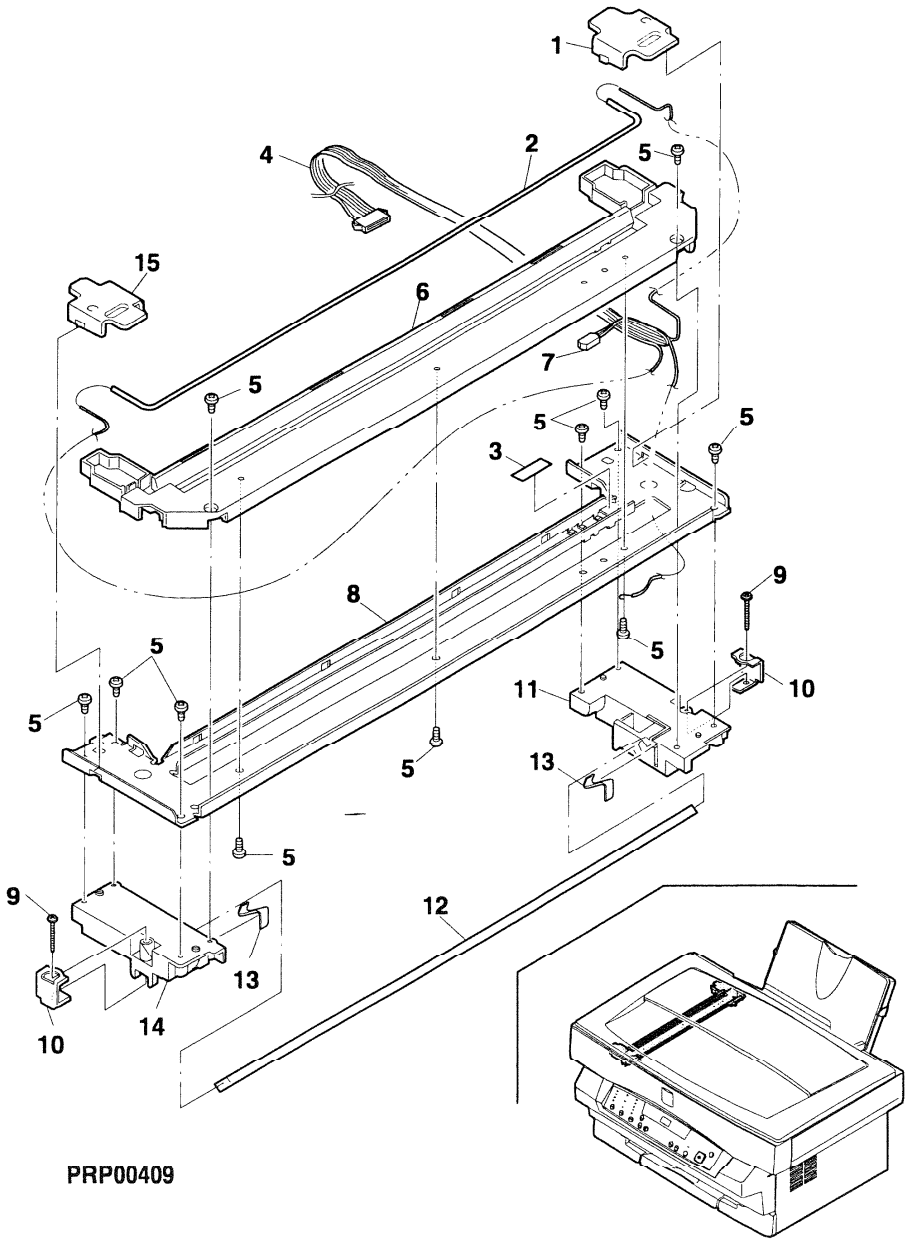

PRP00409

10 Carriage 2 unit

NO.	PARTS CODE	OEM CODE	PRICE RANK	NEW MARK	PART RANK	DESCRIPTION
1	LFiX-7038XCZZ		AD	N	C	2,3 Mirror Holder
2	XUBSD20P05000		AA		C	Screw (2x5)
3	PMiR-7036XCZZ	062E09080	AN	N	B	3rd Mirror
4	MSLiP7015XCZZ		AP	N	C	Carriage 2
5	LX-BZ0465FCZZ		AA		C	Screw (4x6)
6	XWSSD40-08000		AA		C	Washer
7	NPLYZ0007QSZZ		AG		C	W Pulley
8	CDAi-7019XC01		AH	N	C	Carriage 2 Bace L
9	CSLi-0103FC31		AF		C	Slider (4pcs/set)
10	XEBSD40P06000	026E64140	AA		C	Screw (4x6)
11	CDAi-7020XC01		AH	N	C	Carriage 2 Base R
12	XUBSD30P08000		AA		C	Screw (3x8)
13	LX-NZ7007XCZZ		AA	N	C	Nut
	(Unit)					
901	CSLiP7015XC31		BC	N	E	Carriage 2 unit

10 Carriage 2 unit

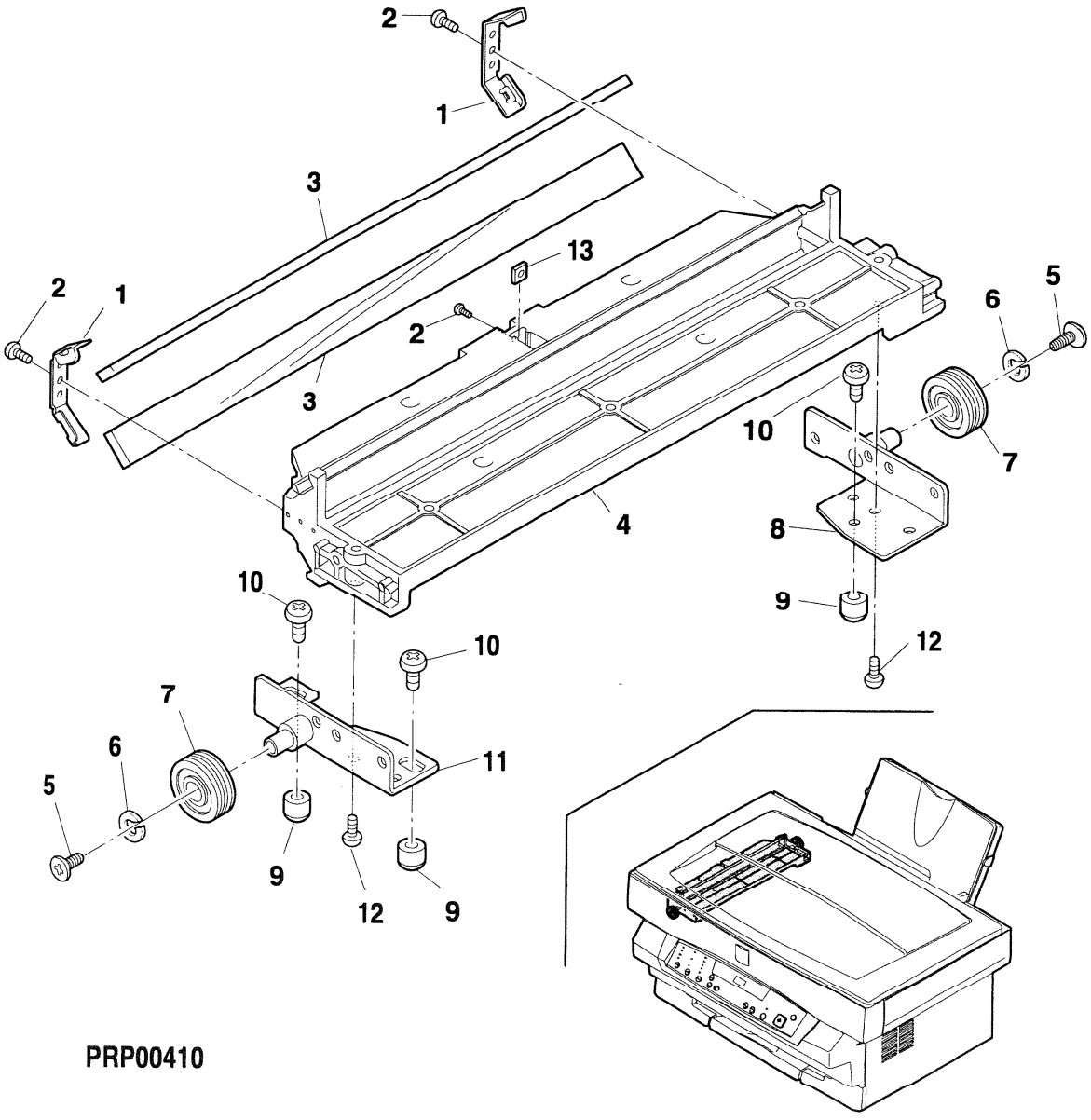

PRP00410

11 Packing Material & Accessories

NO.	PARTS CODE	OEM CODE	PRICE RANK	NEW MARK	PART RANK	DESCRIPTION
⚠ 1	QACCD7618QCZZ	117E19330	AQ		B	AC Cable (120V series)
2	SSAKA5003CCZZ		AA		D	Vinyl bag (140x260mm)(120V series)
3	SPAKA7709XCZZ		AF	N	D	Packing add for Accessories
4	SPAKA7705XCZZ		AM	N	D	Packing add Upper
5	UBAGF0039FCZZ		AG		D	Body vinyl sheet
6	SPAKA7706XCZZ		AM	N	D	Packing add Lower
7	SPAKC7710XC12		AS	N	D	Packing Case (XE-60 U.S.A)
	SPAKC7710XC16		AS	N	D	Packing Case (XE-60 Europe)
	SPAKC7710XC20		AS	N	D	Packing Case (XE-60 other countries)
	SPAKC7710XC13		AS	N	D	Packing Case (XE-62 U.S.A)
	SPAKC7710XS17		AS	N	D	Packing Case (XE-62 Europe)
	SPAKC7710XS21		AS	N	D	Packing Case (XE-62 other countries)
	SPAKC7710XCZZ		AS	N	D	Packing Case (XE-80 U.S.A)
	SPAKC7710XS14		AS	N	D	Packing Case (XE-80 Europe)
	SPAKC7710XS18		AS	N	D	Packing Case (XE-80 other countries)
	SPAKC7710XC11		AS	N	D	Packing Case (XE-82 U.S.A)
	SPAKC7710XS15		AS	N	D	Packing Case (XE-82 Europe)
	SPAKC7710XS19		AS	N	D	Packing Case (XE-82 other countries)
	SPAKC7710XS22		AS	N	D	Packing Case (XE-84 Europe)
	SPAKC7710XS23		AS	N	D	Packing Case (XE-84 other countries)
8	LBNDJ0015FCZZ		AA		C	Cadle band (120V series)
9	LX-BZ7052XCZZ	026E72770	AC		C	Screw for scanner
10	TTAG-7006XCZZ		AH	N	D	Scanner Lock tag
11	QCNW-7212XCZZ	117E19340	AY		C	Centro Cable (XE-80,XE-82,XE-84)
101	SPAKA7714XCZZ	695S01415	AC	N	D	Shipping Protection for CRU
102	TINSE7277XCZZ			N	D	Operation manual (XE-60,62)
	TINSE7278XCZZ			N	D	Operation manual (XE-80,82,84)

11 Packing Material & Accessories

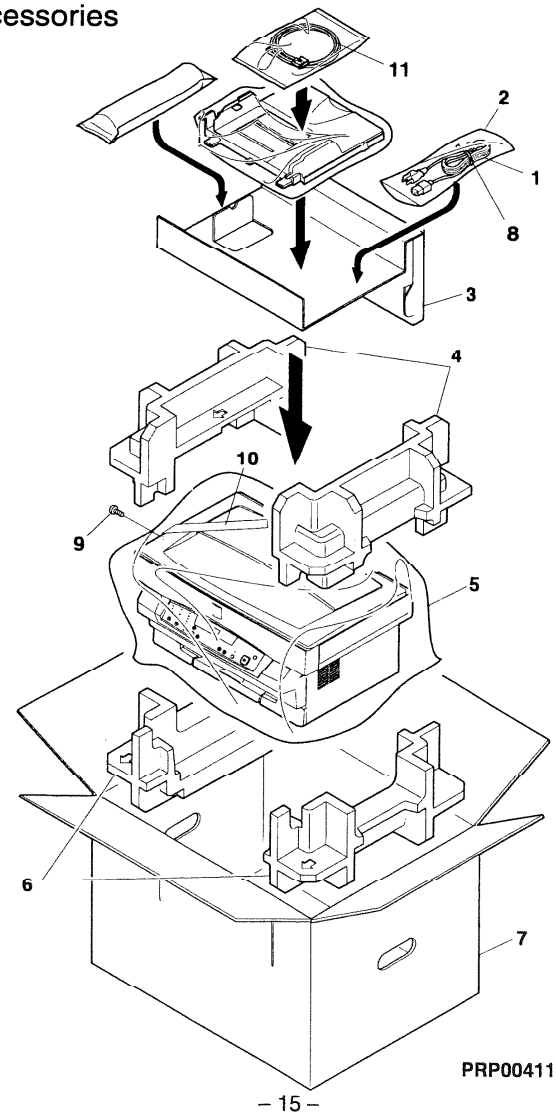

12 MCU PWB unit

NO.	PARTS CODE	OEM CODE	PRICE RANK	NEW MARK	PART RANK	DESCRIPTION	
1	VCEAEU1CW226M		AA		C	Capacitor (16WV 22μF)	[C001~5]
2	VCEAGA1VW106M		AA		C	Capacitor (35WV 10μF)	[C006]
3	VCEAEU1CW226M		AA		C	Capacitor (16WV 22μF)	[C007]
4	VCEAGU1HW476M		AB		C	Capacitor (50WV 47μF)	[C008]
5	VCEAGA1VW106M		AA		C	Capacitor (35WV 10μF)	[C009~15,C17]
6	VCEAGU1EW476M		AB		C	Capacitor (25WV 47μF)	[C016]
7	VCEAGA1VW106M		AA		C	Capacitor (35WV 10μF)	[C017]
8	VCKYCY1HB102K		AA		C	Capacitor (50WV 1000pF)	[C101~103]
9	VCKYCY1EF104Z		AA		C	Capacitor (25WV 0.10μF)	[C104]
10	VCKYCY1HB102K		AA		C	Capacitor (50WV 1000pF)	[C105~115]
11	VCKYCY1EF104Z		AA		C	Capacitor (25WV 0.10μF)	[C116]
12	VCKYTV1HB223K		AA		C	Capacitor (50WV 0.022μF)	[C117]
13	VCKYCY1HB102K		AA		C	Capacitor (50WV 1000pF)	[C118]
14	VCKYCY1EF104Z		AA		C	Capacitor (25WV 0.10μF)	[C119]
15	VCKYCY1HB102K		AA		C	Capacitor (50WV 1000pF)	[C120]
16	VCKYCY1EF104Z		AA		C	Capacitor (25WV 0.10μF)	[C121]
17	VCKYTV1HF104Z		AA		C	Capacitor (50WV 0.10μF)	[C122,123]
18	VCKYCY1EF104Z		AA		C	Capacitor (25WV 0.10μF)	[C124~126]
19	VCCCCY1HH101J		AA		C	Capacitor (50WV 100pF)	[C127,128]
20	VCCCCY1HH330J		AA		C	Capacitor (50WV 33PF)	[C129,130]
21	VCKYCY1HB102K		AA		C	Capacitor (50WV 1000pF)	[C131]
22	VCKYCY1EF104Z		AA		C	Capacitor (25WV 0.10μF)	[C132,133]
23	VCKYTV1HB223K		AA		C	Capacitor (50WV 0.022μF)	[C134]
24	VCCCCY1HH101J		AA		C	Capacitor (50WV 100pF)	[C135]
25	VCCCCY1HH100D		AA		C	Capacitor (50WV 10PF)	[C136,137]
26	VCKYCY1HB102K		AA		C	Capacitor (50WV 1000pF)	[C138,139]
27	VCKYTV1HF104Z		AA		C	Capacitor (50WV 0.10μF)	[C140]
28	VCCCCY1HH101J		AA		C	Capacitor (50WV 100pF)	[C141,142]
29	VCKYTV1HB223K		AA		C	Capacitor (50WV 0.022μF)	[C143]
30	VCKYCY1EF104Z		AA		C	Capacitor (25WV 0.10μF)	[C144]
31	VCCCCY1HH101J		AA		C	Capacitor (50WV 100pF)	[C145~156]
32	VCKYCY1EF104Z		AA		C	Capacitor (25WV 0.10μF)	[C157]
33	VCKYCY1HB102K		AA		C	Capacitor (50WV 1000pF)	[C159]
34	VCCCCY1HH101J		AA		C	Capacitor (50WV 100pF)	[C160]
35	VCKYCY1EF104Z		AA		C	Capacitor (25WV 0.10μF)	[C161]
36	VCKYCY1HB472K		AA		C	Capacitor (50WV 4700PF)	[C162]
37	VCKYCY1EF104Z		AA		C	Capacitor (25WV 0.10μF)	[C163~165]
38	VCKYCY1EF104Z		AA		C	Capacitor (25WV 0.10μF)	[C168,169]
39	VCCCCY1HH101J		AA		C	Capacitor (50WV 100pF)	[C170,171]
40	VCKYCY1EF104Z		AA		C	Capacitor (25WV 0.10μF)	[C172,173]
41	VCCCCY1HH101J		AA		C	Capacitor (50WV 100pF)	[C174~181]
42	VCKYCY1EF104Z		AA		C	Capacitor (25WV 0.10μF)	[C182~186]
43	VCKYTV1HF104Z		AA		C	Capacitor (50WV 0.10μF)	[C187]
44	VCCCCY1HH120J		AA		C	Capacitor (50WV 12PF)	[C188]
45	VCKYCY1EF104Z		AA		C	Capacitor (25WV 0.10μF)	[C189]
46	VCKYTV1HB223K		AA		C	Capacitor (50WV 0.022μF)	[C191~193]
47	VCKYCY1EF104Z		AA		C	Capacitor (25WV 0.10μF)	[C192]
48	VCKYCY1EF104Z		AA		C	Capacitor (25WV 0.10μF)	[C194~199]
49	VCKYCY1HB471K		AB		C	Capacitor (50WV 470PF)	[C200]
50	VCKYCY1HB222K		AA		C	Capacitor (50WV 2200PF)	[C201]
51	VCKYTV1HF104Z		AA		C	Capacitor (50WV 0.10μF)	[C202]
52	VCKYCY1EF104Z		AA		C	Capacitor (25WV 0.10μF)	[C205~209]
53	VCKYTV1HF104Z		AA		C	Capacitor (50WV 0.10μF)	[C210]
54	VCKYCY1EF104Z		AA		C	Capacitor (25WV 0.10μF)	[C212~214]
55	VCKYCY1HB222K		AA		C	Capacitor (50WV 2200PF)	[C215]
56	VCKYCY1HB471K		AB		C	Capacitor (50WV 470PF)	[C216]
57	VCKYCY1HB102K		AA		C	Capacitor (50WV 1000pF)	[C217,218]
58	VCKYCY1EF104Z		AA		C	Capacitor (25WV 0.10μF)	[C219]
59	VCKYCY1HB102K		AA		C	Capacitor (50WV 1000pF)	[C220~223]
60	VCKYCY1EF104Z		AA		C	Capacitor (25WV 0.10μF)	[C224]
61	VCKYTV1HF104Z		AA		C	Capacitor (50WV 0.10μF)	[C225]
62	VCKYCY1HB102K		AA		C	Capacitor (50WV 1000pF)	[C227]
63	VCKYCY1HB222K		AA		C	Capacitor (50WV 2200PF)	[C228]
64	VCKYCY1HB102K		AA		C	Capacitor (50WV 1000pF)	[C229~234]
65	VCKYCY1EF104Z		AA		C	Capacitor (25WV 0.10μF)	[C235]
66	VCKYTV1HF104Z		AA		C	Capacitor (50WV 0.10μF)	[C236]
67	VCKYCY1HB102K		AA		C	Capacitor (50WV 1000pF)	[C237,238]
68	VCKYCY1EF104Z		AA		C	Capacitor (25WV 0.10μF)	[C239,240]
69	VCKYCY1HB222K		AA		C	Capacitor (50WV 2200PF)	[C241]
70	VCCCCY1HH330J		AA		C	Capacitor (50WV 33PF)	[C243]
71	VCCCCY1HH101J		AA		C	Capacitor (50WV 100pF)	[C244]
72	QCNCW1124LC1B		AC		C	Connector (12pin)	[CN01]
73	QCNCM7014SC0B		AD		C	Connector (2pin)	[CN02]
74	QCNCM7014SC0F		AB		C	Connector (6pin)	[CN03]
75	QCNCM7014SC0E		AB		C	Connector (5pin)	[CN04]
76	QCNCM7014SC0E		AB		C	Connector (5pin)	[CN06]
77	QCNCM7014SC0C		AA		C	Connector (3pin)	[CN07]
78	QCNCW7042XC2J		AE	N	C	Connector (20pin)	[CN08]
79	QCNCW0053GCZZ		AD		C	Connector (9pin)	[CN09]
80	QCNCW1124LC0D		AB		C	Connector (4pin)	[CN10]

12 MCU PWB unit

NO.	PARTS CODE	OEM CODE	PRICE RANK	NEW MARK	PART RANK	DESCRIPTION	
81	QCNCW0015QSZZ		AE	N	C	Connector (5pin)	[CN11]
82	QCNCM7014SC0C		AA		C	Connector (3pin)	[CN12]
83	QCNCM7022SC0B		AB		C	Connector (2pin)	[CN13]
84	QCNCW1135LC2B		AE		C	Connector (22pin)	[CN14]
85	QCNCW7044XCZZ		AG	N	C	Connector	[CN15]
86	VHD1SS355//-1		AB		B	Diode (1SS355)	[D001]
87	VHDiN4005E/-2		AB	N	B	Diode (IN4005E)	[D002]
88	VHDDA204K//-1		AC		B	Diode (DA204K)	[D101~104]
89	VHDDAN217//-1		AC		B	Diode (DAN217)	[D105,106]
90	VHDDA204K//-1		AC		B	Diode (DA204K)	[D107~111]
91	VHDDAN202K/-1		AB		B	Diode (DAN202K)	[D112]
92	VHDDA204K//-1		AC		B	Diode (DA204K)	[D113~115]
93	VHD1SS355//-1		AB		B	Diode (1SS355)	[D117]
94	RCiLZ0004QSZZ		AE		C	EMI filter (NFM839R02C470R101)	[EF1~3]
95	VHiM24C02WBN6		AG		B	IC (M24C02WBN6)	[IC001]
96	VHi341256SJ12		AN	N	B	IC (341256SJ12)	[IC002,3]
97	VHiM51953BL-1		AF		B	IC (M51953BL)	[IC004]
98	VHiH8S/2350FP		AY		B	IC (H8S/2350FP)	[IC005]
99	QSOCZ0002GCZZ		AD		C	IC socket (40pin)	[IC006]
100	VHi27C1024-80		AW		B	IC (27C1024-80)	[IC006]
101	VHiHG73C025FD		BE		B	IC (HG73C025FD)	[IC008]
102	VHi341256SJ12		AN	N	B	IC (341256SJ12)	[IC011,12]
103	VHiSLA7027MU/		AQ		B	IC (SLA7027MU)	[IC013]
104	VHiTC74HC244F		AM		B	IC (TC74HC244F)	[IC101]
105	VHiTC74HC04FN		AD		B	IC (TC74HC04FN)	[IC102]
106	VHiTC74HC08F1		AE		B	IC (TC74HC08F1)	[IC103]
107	VHiTC74HC32AF		AC		B	IC (TC74HC32AF)	[IC104]
108	VHiM66236FP-1		AT		B	IC (M66236FP)	[IC105]
109	VHiNJM2903M/-		AD		B	IC (NJM2903M)	[IC106]
110	VHiLM358PS/-S		AC		B	IC (LM358PS)	[IC107]
111	VHiNJM3414M-1		AF		B	IC (NJM3414M)	[IC108]
112	VHiSN74LS07NS		AF		B	IC (SN74LS07NS)	[IC109]
113	VHiLM7121////		AQ	N	B	IC (LM7121)	[IC110]
114	VHi74HC4066AF		AD		B	IC (74HC4066AF)	[IC111]
115	VHiLH50506N-2		AU		B	IC (LH50506N)	[IC112]
116	VHViCPN38//-1	108N00367	AF	N	B	IC Protector (ICPN38)	[ICP1]
117	RCiLZ1032CCZZ		AD		C	Coil (SBO-02SAN)	[L1~5]
118	VS2SA1036KQRC		AB		B	Transistor (2SA1036KQRC)	[Q101]
119	VRS-RE3DA1R0J		AB		C	Resistor (2W 1.0Ω ±5%)	[R001,2]
120	VRS-TP2BD472J		AA		C	Resistor (1/8W 4.7KΩ ±5%)	[R101]
121	VRS-CY1JD473J		AA		C	Resistor (1/16W 47KΩ ±5%)	[R102]
122	VRS-CY1JD103J		AA		C	Resistor (1/16W 10KΩ ±5%)	[R103]
123	VRS-CY1JD203J		AA		C	Resistor (1/16W 20KΩ ±5%)	[R104]
124	VRS-CY1JD103J		AA		C	Resistor (1/16W 10KΩ ±5%)	[R105,106]
125	VRS-CY1JD102J		AA		C	Resistor (1/16W 1KΩ ±5%)	[R107~109]
126	VRS-CY1JD103J		AA		C	Resistor (1/16W 10KΩ ±5%)	[R110,111]
127	VRS-CY1JD102J		AA		C	Resistor (1/16W 1KΩ ±5%)	[R112]
128	VRS-CY1JD101J		AA		C	Resistor (1/16W 100Ω ±5%)	[R113]
129	VRS-CY1JD103J		AA		C	Resistor (1/16W 10KΩ ±5%)	[R114]
130	VRS-TP2BD432J		AA	N	C	Resistor (1/8W 4.3KΩ ±5%)	[R115]
131	VRS-TP2BD181J		AA		C	Resistor (1/8W 180Ω ±5%)	[R116]
132	VRS-CY1JD100J		AA		C	Resistor (1/16W 10Ω ±5%)	[R117]
133	VRS-CY1JD102J		AA		C	Resistor (1/16W 1KΩ ±5%)	[R118]
134	VRS-CY1JD912J		AA		C	Resistor (1/16W 9.1KΩ ±5%)	[R119]
135	VRS-CY1JD333J		AA		C	Resistor (1/16W 33KΩ ±5%)	[R120]
136	VRS-CY1JD102J		AA		C	Resistor (1/16W 1KΩ ±5%)	[R121]
137	VRS-CY1JD203J		AA		C	Resistor (1/16W 20KΩ ±5%)	[R122]
138	VRS-CY1JD911J		AA		C	Resistor (1/16W 910Ω ±5%)	[R123]
139	VRS-CY1JD103J		AA		C	Resistor (1/16W 10KΩ ±5%)	[R124]
140	VRS-CY1JD101J		AA		C	Resistor (1/16W 100Ω ±5%)	[R125]
141	VRS-CY1JD203J		AA		C	Resistor (1/16W 20KΩ ±5%)	[R126]
142	VRS-CY1JD103J		AA		C	Resistor (1/16W 10KΩ ±5%)	[R127]
143	VRS-CY1JD331J		AA		C	Resistor (1/16W 330Ω ±5%)	[R128]
144	VRS-CY1JD102J		AA		C	Resistor (1/16W 1KΩ ±5%)	[R129]
145	VRS-CY1JD332J		AA		C	Resistor (1/16W 3.3KΩ ±5%)	[R130]
146	VRS-CY1JD680J		AA		C	Resistor (1/16W 68Ω ±5%)	[R131]
147	VRS-CY1JD332J		AA		C	Resistor (1/16W 3.3KΩ ±5%)	[R132]
148	VRS-CY1JD103J		AA		C	Resistor (1/16W 10KΩ ±5%)	[R134~141]
149	VRS-CY1JD470J		AA		C	Resistor (1/16W 47Ω ±5%)	[R142]
150	VRS-CY1JD220J		AA		C	Resistor (1/16W 22Ω ±5%)	[R143]
151	VRS-CY1JD205J		AA		C	Resistor (1/16W 2.0MΩ ±5%)	[R144]
152	VRS-CY1JD162J		AA		C	Resistor (1/16W 1.6KΩ ±5%)	[R145]
153	VRS-CY1JD103J		AA		C	Resistor (1/16W 10KΩ ±5%)	[R146]
154	VRS-CY1JD205J		AA		C	Resistor (1/16W 2.0MΩ ±5%)	[R147]
155	VRS-CY1JD122J		AA		C	Resistor (1/16W 1.2KΩ ±5%)	[R148]
156	VRS-CY1JD752J		AA		C	Resistor (1/16W 7.5KΩ ±5%)	[R149]
157	VRSCY1JD1652F		AA		C	Resistor (1/16W 1.65KΩ +1%)	[R150]
158	VRS-CY1JD102J		AA		C	Resistor (1/16W 1KΩ ±5%)	[R151]
159	VRS-CY1JD101J		AA		C	Resistor (1/16W 100Ω ±5%)	[R152]
160	VRS-CY1JD103J		AA		C	Resistor (1/16W 10KΩ ±5%)	[R153]

12 MCU PWB unit

NO.	PARTS CODE	OEM CODE	PRICE RANK	NEW MARK	PART RANK	DESCRIPTION	
161	VRS-CY1JD473J		AA		C	Resistor (1/16W 47KΩ ±5%)	[R157]
162	VRS-CY1JD242J		AA	N	C	Resistor (1/16W 2.4KΩ ±5%)	[R158]
163	VRS-CY1JD621J		AA		C	Resistor (1/16W 620Ω ±5%)	[R159,160]
164	VRS-CY1JD000J		AA		C	Resistor (1/16W 0Ω ±5%)	[R161,162]
165	VRS-CY1JD271J		AA		C	Resistor (1/16W 270Ω ±5%)	[R163]
166	VRS-CY1JD103J		AA		C	Resistor (1/16W 10KΩ ±5%)	[R167~174]
167	VRS-CY1JD242J		AA	N	C	Resistor (1/16W 2.4KΩ ±5%)	[R175]
168	VRS-CY1JD101J		AA		C	Resistor (1/16W 100Ω ±5%)	[R176]
169	VRS-CY1JD751J		AA		C	Resistor (1/16W 750Ω ±5%)	[R177]
170	VRS-CY1JD103J		AA		C	Resistor (1/16W 10KΩ ±5%)	[R179]
171	VRS-CY1JD101J		AA		C	Resistor (1/16W 100Ω ±5%)	[R180]
172	VRS-CY1JD000J		AA		C	Resistor (1/16W 0Ω ±5%)	[R181]
173	VRS-CY1JD473J		AA		C	Resistor (1/16W 47KΩ ±5%)	[R182]
174	VRS-CY1JD102J		AA		C	Resistor (1/16W 1KΩ ±5%)	[R183]
175	VRS-CY1JD203J		AA		C	Resistor (1/16W 20KΩ ±5%)	[R184]
176	VRS-CY1JD000J		AA		C	Resistor (1/16W 0Ω ±5%)	[R185,186]
177	VRS-TP2BD101J		AA		C	Resistor (1/8W 100Ω ±5%)	[R188]
178	VRS-CY1JD101J		AA		C	Resistor (1/16W 100Ω ±5%)	[R189]
179	VRS-CY1JD102J		AA		C	Resistor (1/16W 1KΩ ±5%)	[R190]
180	VRS-CY1JD681J		AA		C	Resistor (1/16W 680Ω ±5%)	[R191]
181	VRS-CY1JD000J		AA		C	Resistor (1/16W 0Ω ±5%)	[R192]
182	VRS-CY1JD203J		AA		C	Resistor (1/16W 20KΩ ±5%)	[R193]
183	VRS-CY1JD000J		AA		C	Resistor (1/16W 0Ω ±5%)	[R194]
184	VRS-CY1JD102J		AA		C	Resistor (1/16W 1KΩ ±5%)	[R195]
185	VRS-CY1JD103J		AA		C	Resistor (1/16W 10KΩ ±5%)	[R196]
186	VRSCY1JD1002F		AA		C	Resistor (1/16W 10KΩ ±1%)	[R197,198]
187	VRS-CY1JD100J		AA		C	Resistor (1/16W 10Ω ±5%)	[R199]
188	VRS-CY1JD681J		AA		C	Resistor (1/16W 680Ω ±5%)	[R200]
189	VRS-CY1JD000J		AA		C	Resistor (1/16W 0Ω ±5%)	[R201]
190	RMPTW4470QCJJ		AB		B	Block resistor (47Ω×4 1/32W ±5%)	[RA01]
191	RMPTW4103QCJJ		AB		B	Block resistor (10kΩ×4 ±5%)	[RA02~5]
192	RMPTW4470QCJJ		AB		B	Block resistor (47Ω×4 1/32W ±5%)	[RA06]
193	RMPTW4103QCJJ		AB		B	Block resistor (10kΩ×4 ±5%)	[RA07~9]
194	RMPTW4470QCJJ		AB		B	Block resistor (47Ω×4 1/32W ±5%)	[RA10]
195	RMPTW4103QCJJ		AB		B	Block resistor (10kΩ×4 ±5%)	[RA11]
196	RMPTW4470QCJJ		AB		B	Block resistor (47Ω×4 1/32W ±5%)	[RA12]
197	RMPTW4103QCJJ		AB		B	Block resistor (10kΩ×4 ±5%)	[RA13,14]
198	RMPTW4470QCJJ		AB		B	Block resistor (47Ω×4 1/32W ±5%)	[RA15,16]
199	RMPTW4103QCJJ		AB		B	Block resistor (10kΩ×4 ±5%)	[RA17]
200	RMPTW4470QCJJ		AB		B	Block resistor (47Ω×4 1/32W ±5%)	[RA18,19]
201	RMPTW4103QCJJ		AB		B	Block resistor (10kΩ×4 ±5%)	[RA20]
202	RMPTW4470QCJJ		AB		B	Block resistor (47Ω×4 1/32W ±5%)	[RA21]
203	RMPTW4103QCJJ		AB		B	Block resistor (10kΩ×4 ±5%)	[RA22~24]
204	RMPTW4470QCJJ		AB		B	Block resistor (47Ω×4 1/32W ±5%)	[RA25~28]
205	RMPTW4103QCJJ		AB		B	Block resistor (10kΩ×4 ±5%)	[RA29]
206	RMPTW4470QCJJ		AB		B	Block resistor (47Ω×4 1/32W ±5%)	[RA30]
207	RMPTW4103QCJJ		AB		B	Block resistor (10kΩ×4 ±5%)	[RA31~34]
208	RMPTW4220QCJJ		AB		B	Block resistor (22Ω×4 ±5%)	[RA35,36]
209	RCRSZ7010XCZZ		AG	N	B	Crystal	[X1]
210	RCRSZ7009XCZZ		AP	N	B	Crystal	[X2]
211	VHERLZ2 0A/-1		AB		B	Zener diode (RLZ2.0A)	[ZD3]
	(Unit)						
901	CPWBX7016WS51		BT	N	E	MCU PWB unit	

13 Operation Panel PWB unit

NO.	PARTS CODE	OEM CODE	PRICE RANK	NEW MARK	PART RANK	DESCRIPTION	
1	VHPMPG3864K-J		AC		B	LED (MPG3864K)	[1ENR]
2	VHPMPG3864K-J		AC		B	LED (MPG3864K)	[1RE]
3	VHPMPG3864K-J		AC		B	LED (MPG3864K)	[2ENR]
4	VHPMPG3864K-J		AC		B	LED (MPG3864K)	[2RE]
5	VHPMPG3864K-J		AC		B	LED (MPG3864K)	[AE]
6	VHPMPG3864K-J		AC		B	LED (MPG3864K)	[BPL]
7	VCKYTV1HB223K		AA		C	Capacitor (50WV 0.022μF)	[C901]
8	VCEAJU1CW476M		AB		C	Capacitor (16WV 47μF)	[C902]
9	VCKYTV1HB223K		AA		C	Capacitor (50WV 0.022μF)	[C903]
10	VCCCTV1HH201J		AA	N	C	Capacitor (50WV 200pF)	[C904~906]
11	VCKYTV1EB104K		AA		C	Capacitor (25WV 0.10μF)	[C907,908]
12	VCKYTV1HB102K		AA		C	Capacitor (50WV 1000PF)	[C909~918]
13	QSW-P0005QSZZ		AC		B	Tact Switch	[CLK]
14	QCNCW1132LC1B		AC	N	C	Connector (12pin)	[CN901]
15	QSW-P0005QSZZ		AC		B	Tact Switch	[CRSK]
16	VHDDSS133//-1		AA		B	Diode (DSS133)	[D901~D910]
17	VHPMPG3864K-J		AC		B	LED (MPG3864K)	[DATL XE-80,82,84]
18	VHPMVR3864K-J		AC		B	LED (MRV3864K)	[DPL]
19	QSW-P0005QSZZ		AC		B	Tact Switch	[DZWK]

13 Operation Panel PWB unit

NO.	PARTS CODE	OEM CODE	PRICE RANK	NEW MARK	PART RANK	DESCRIPTION	
20	VHPMPG3864K-J		AC		B	LED (MPG3864K)	[EXD]
21	VHPMPG3864K-J		AC		B	LED (MPG3864K)	[EXL]
22	QSW-P0005QSZZ		AC		B	Tact Switch	[EXMODK]
23	VHPMPG3864K-J		AC		B	LED (MPG3864K)	[EXN]
24	QSW-P0005QSZZ		AC		B	Tact Switch	[EXUDK]
25	VHiLC7935//-1		AN		B	IC (LC7935)	[IC902]
26	VHiTC74HC151F		AG	N	B	IC (TC74HC151F)	[IC902]
27	VHiMC74HC00AF		AC		B	IC (MC74HC00AF)	[IC903]
28	QSW-P0005QSZZ		AC		B	Tact Switch	[IOUPK]
29	QSW-P0005QSZZ		AC		B	Tact Switch	[IUPK]
30	VRS-TP2BD000J		AA		C	Resistor (1/8W 0Ω ±5%)	[J900-944]
31	VRS-TP2BD000J		AA		C	Resistor (1/8W 0Ω ±5%)	[J946-953]
32	VRS-TP2BD000J		AA		C	Resistor (1/8W 0Ω ±5%)	[J955-966]
33	VHPMVR3864K-J		AC		B	LED (MRV3864K)	[JPL]
34	PSPAZ0005QSZZ		AC		C	Spacer	[LEDM]
35	VHPLTC3650G01		AQ		B	LED (LTC3650G01)	[LEDM]
36	QSW-P0005QSZZ		AC		B	Tact Switch	[MAGK]
37	VHPMPG3864K-J		AC		B	LED (MPG3864K)	[ME]
38	VHPMPG3864K-J		AC		B	LED (MPG3864K)	[NOR]
39	QSW-P0005QSZZ		AC		B	Tact Switch	[OLK XE-80,82,84]
40	VHPMPG3864K-J		AC		B	LED (MPG3864K)	[ONLL XE-80,82,84]
41	VHPMPG3864K-J		AC		B	LED (MPG3864K)	[PE]
42	QSW-P0005QSZZ		AC		B	Tact Switch	[PSW]
43	VSDTB113ZK/-1		AD		B	Transistor (DTB113ZK)	[Q901-903]
44	VRS-TS2AD121J		AA		C	Resistor (1/10W 120Ω ±5%)	[R902-918]
45	VRS-TS2AD472J		AA		C	Resistor (1/10W 4.7KΩ ±5%)	[R919-926]
46	VRS-TS2AD472J		AA		C	Resistor (1/10W 4.7KΩ ±5%)	[R928]
47	VRS-TS2AD472J		AA		C	Resistor (1/10W 4.7KΩ ±5%)	[R930]
48	VRS-TS2AD102J		AA		C	Resistor (1/10W 1KΩ ±5%)	[R932-935]
49	VRS-TS2AD152J		AA		C	Resistor (1/10W 1.5KΩ ±5%)	[R936-938]
50	VRS-TS2AD151J		AA		C	Resistor (1/10W 150Ω ±5%)	[R939-941]
51	VRS-TS2AD511J		AA		C	Resistor (1/10W 510Ω ±5%)	[R942,943]
52	VRS-TS2AD102J		AA		C	Resistor (1/10W 1KΩ ±5%)	[R944-946]
53	VRS-TS2AD101J		AA		C	Resistor (1/10W 100Ω ±5%)	[R948-957]
54	VRS-TS2AD103J		AA		C	Resistor (1/10W 10KΩ ±5%)	[R962]
55	VHPMPG3864K-J		AC		B	LED (MPG3864K)	[RPL]
56	VHPMVR3864K-J		AC		B	LED (MRV3864K)	[TPL]
57	VHPMPG3864K-J		AC		B	LED (MPG3864K)	[TSL]
58	VHPMPG3864K-J		AC		B	LED (MPG3864K)	[ZPL]
59	QSW-P0005QSZZ		AC		B	Tact Switch	[ZUPK]
	(Unit)						
901	CPWBF7021WS51		BA	N	E	Operation Panel PWB unit (XE-60,XE-62)	
	CPWBF7021WS52		BA	N	E	Operation Panel PWB unit (XE 80,XE 82,XE 84)	

14 ICU PWB unit(XE-80,XE-82,XE-84)

NO.	PARTS CODE	OEM CODE	PRICE RANK	NEW MARK	PART RANK	DESCRIPTION	
1	VCKYTV1EF104Z		AA		C	Capacitor (25WV 0.10μF)	[C201]
2	VCEAEA1AW476M		AB		C	Capacitor (10WV 47μF)	[C202]
3	VCKYTV1EF104Z		AA		C	Capacitor (25WV 0.10μF)	[C203,204]
4	VCCCTV1HH182J		AC	N	C	Capacitor (50WV 1800pF)	[C205]
5	VCCCTV1HH470J		AA		C	Capacitor (50WV 47PF)	[C206]
6	VCKYTV1EF104Z		AA		C	Capacitor (25WV 0.10μF)	[C207]
7	VCCCTV1HH101J		AA		C	Capacitor (50WV 100PF)	[C208]
8	VCCCTV1HH391J		AA		C	Capacitor (50WV 390PF)	[C209]
9	VCCCTV1HH101J		AA		C	Capacitor (50WV 100PF)	[C210]
10	VCCCTV1HH391J		AA		C	Capacitor (50WV 390PF)	[C211]
11	VCCCTV1HH101J		AA		C	Capacitor (50WV 100PF)	[C212]
12	VCCCTV1HH391J		AA		C	Capacitor (50WV 390PF)	[C213]
13	VCCCTV1HH101J		AA		C	Capacitor (50WV 100PF)	[C214-216]
14	VCCCTV1HH681J		AA		C	Capacitor (50WV 680PF)	[C217]
15	VCCCTV1HH470J		AA		C	Capacitor (50WV 47PF)	[C218]
16	VCKYTV1HB103K		AB		C	Capacitor (50WV 0.010μF)	[C219]
17	VCKYTV1EF104Z		AA		C	Capacitor (25WV 0.10μF)	[C220-232]
18	VCKYTV1EF104Z		AA		C	Capacitor (25WV 0.10μF)	[C242]
19	QCNCW7041XCZZ		AG		C	Connector (36pin)	[CN202]
20	QCNCW7042XC2J		AE	N	C	Connector (20pin)	[CN203]
21	VHi4M8SOJ-70/		BB		B	IC (4M20SOJ-70)	[IC201]
22	VHiSLA303T/-1		AY		B	IC (SLA303T)	[IC202]
23	RFiLN0019GCZZ		AC	N	C	Coil	[L202,203]
24	RFiLN0019GCZZ		AC	N	C	Coil	[L207,208]
25	RFiLN0019GCZZ		AC	N	C	Coil	[L214-216]
26	RFiLN0019GCZZ		AC	N	C	Coil	[L219-227]
27	RCiLZ0006GCZZ		AC		C	Coil	[L228]
28	RFiLN0019GCZZ		AC	N	C	Coil	[L233]
29	RFiLN0019GCZZ		AC	N	C	Coil	[L235,236]

14 ICU PWB unit(XE-80,XE-82,XE-84)

NO.	PARTS CODE	OEM CODE	PRICE RANK	NEW MARK	PART RANK	DESCRIPTION	
30	RFiLN0019GCZZ		AC	N	C	Coil	[L241]
31	VRS-TS2AD103J		AA		C	Resistor (1/10W 10KΩ ±5%)	[R201~208]
32	VRS-TS2AD221J		AA		C	Resistor (1/10W 220Ω ±5%)	[R209]
33	VRS-TS2AD103J		AA		C	Resistor (1/10W 10KΩ ±5%)	[R210]
34	VRS-TS2AD222J		AA		C	Resistor (1/10W 2.2KΩ ±5%)	[R211]
35	VRS-TS2AD122J		AA		C	Resistor (1/10W 1.2KΩ ±5%)	[R212]
36	VRS-TS2AD332J		AA		C	Resistor (1/10W 3.3KΩ ±5%)	[R213]
37	VRS-TS2AD122J		AA		C	Resistor (1/10W 1.2KΩ ±5%)	[R214~216]
38	VRS-TS2AD221J		AA		C	Resistor (1/10W 220Ω ±5%)	[R217]
39	VRS-TS2AD122J		AA		C	Resistor (1/10W 1.2KΩ ±5%)	[R218]
40	VRS-TS2AD221J		AA		C	Resistor (1/10W 220Ω ±5%)	[R219]
41	VRS-TS2AD122J		AA		C	Resistor (1/10W 1.2KΩ ±5%)	[R220]
42	VRS-TS2AD221J		AA		C	Resistor (1/10W 220Ω ±5%)	[R221]
43	VRS-TS2AD122J		AA		C	Resistor (1/10W 1.2KΩ ±5%)	[R222]
44	VRS-TS2AD221J		AA		C	Resistor (1/10W 220Ω ±5%)	[R223]
45	VRS-TS2AD122J		AA		C	Resistor (1/10W 1.2KΩ ±5%)	[R224]
46	VRS-TS2AD221J		AA		C	Resistor (1/10W 220Ω ±5%)	[R225]
47	VRS-TS2AD122J		AA		C	Resistor (1/10W 1.2KΩ ±5%)	[R226]
48	VRS-TS2AD221J		AA		C	Resistor (1/10W 220Ω ±5%)	[R227]
49	VRS-TS2AD122J		AA		C	Resistor (1/10W 1.2KΩ ±5%)	[R228]
50	VRS-TS2AD221J		AA		C	Resistor (1/10W 220Ω ±5%)	[R229]
51	VRS-TS2AD122J		AA		C	Resistor (1/10W 1.2KΩ ±5%)	[R230]
52	VRS-TS2AD221J		AA		C	Resistor (1/10W 220Ω ±5%)	[R231]
53	VRS-TS2AD122J		AA		C	Resistor (1/10W 1.2KΩ ±5%)	[R232]
54	VRS-TS2AD221J		AA		C	Resistor (1/10W 220Ω ±5%)	[R233]
55	VRS-TS2AD105J		AA		C	Resistor (1/10W 1MΩ ±5%)	[R234]
56	VRS-TS2AD122J		AA		C	Resistor (1/10W 1.2KΩ ±5%)	[R235~248]
57	VRS-TS2AD122J		AA		C	Resistor (1/10W 1.2KΩ ±5%)	[R250~252]
58	VRS-TS2AD221J		AA		C	Resistor (1/10W 220Ω ±5%)	[R253,254]
59	VRS-TS2AD122J		AA		C	Resistor (1/10W 1.2KΩ ±5%)	[R255,256]
60	VRS-TS2AD221J		AA		C	Resistor (1/10W 220Ω ±5%)	[R257,258]
61	VRS-TS2AD122J		AA		C	Resistor (1/10W 1.2KΩ ±5%)	[R259,260]
62	VRS-TS2AD221J		AA		C	Resistor (1/10W 220Ω ±5%)	[R261,262]
63	VRS-TS2AD122J		AA		C	Resistor (1/10W 1.2KΩ ±5%)	[R263,264]
64	VRS-TS2AD221J		AA		C	Resistor (1/10W 220Ω ±5%)	[R265,266]
65	RCRSZ0028GCZZ		AH		B	Crystal (35.5721237MHz)	[X201]
	(Unit)						
901	CPWBF7018WS52		CF	N	E	ICU PWB unit (XE-80,XE-82,XE-84)	

15 Power Supply unit

NO.	PARTS CODE	OEM CODE	PRICE RANK	NEW MARK	PART RANK	DESCRIPTION
⚠ 1	QFS-F0030PAZZ		AE		A	Fuse (125V/5A)(100V series)
⚠	QFS-C0048PAZZ				A	Fuse (250V/3.15A)(200V series)
⚠ 2	QFS-F0019PAZZ		AD		A	Fuse (125V/10A)(100V series)
⚠	QFS-C0047PAZZ				A	Fuse (240V/5A)(200V series)
	(Unit)					
901	CPWBF7022XC33	160K55740	BM	N	E	Power Supply unit (120V series)
	CPWBF7022XC34	160K55750	BP	N	E	Power Supply unit (230V series)

■ Index

PARTS CODE	OEM CODE	NO.	PRICE RANK	NEW MARK	PART RANK
【C】					
CCAB-7060XC01	802E00980	1- 12	AT	N	C
CCAB-7060XC02		1- 12	AT	N	C
CCOV-7042XS52		1-502	BA		E
CCOV-7044XS51		1-502	BA	N	E
CDAi-7019XC01		10- 8	AH	N	C
CDAi-7020XC01		10- 11	AH	N	C
CDAiU0008RS52	062E09060	8- 42	BR	N	E
CFRM-0044PS63		4-901	BV	N	E
CFRM-0044PS64		4-901	BV	N	E
CHLDZ0040PS74		7- 13		N	E
CPLTM7067XC01		8- 36	AG	N	C
CPLTM7068XC01		8- 37	AG	N	C
CPLTM7069XC01		8- 29	AH	N	C
CPLTP7071XS51		5- 10	AH	N	E
CPNLC7028XC31		1- 11		N	E
〃		2-901		N	E
CPNLC7028XC32		1- 11		N	E
〃		2-901		N	E
CPNLC7028XC33		1- 11		N	E
〃		2-901		N	E
CPNLC7028XC34		1- 11		N	E
〃		2-901		N	E
CPNLC7028XC35	053E06010	1- 11	BK	N	E
〃	053E06010	2-901	BK	N	E
CPNLC7028XC36		1- 11		N	E
〃		2-901		N	E
CPNLC7028XC37		1- 11		N	E
〃		2-901		N	E
CPNLC7028XC38		1- 11		N	E
〃		2-901		N	E
CPNLC7028XC40		1- 11		N	E
〃		2-901		N	E
CPWBF0072VS52		4- 30	AQ	N	E
CPWBF1177DS61		7- 17	AH	N	E
CPWBF7018WS52		6- 14	CF	N	E
〃		14-901	CF	N	E
CPWBF7019WS51		6- 7	BE	N	E
CPWBF7021WS51		2- 1	BA	N	E
〃		13-901	BA	N	E
CPWBF7021WS52		2- 1	BA	N	E
〃		13-901	BA	N	E
CPWBF7022XC33	160K55740	6- 15	BM	N	E
〃	160K55740	15-901	BM	N	E
CPWBF7022XC34	160K55750	6- 15	BP	N	E
〃	160K55750	15-901	BP	N	E
CPWBX7016WS51		6- 1	BT	N	E
〃		12-901	BT	N	E
CSLi-0103FC31		10- 9	AF		C
CSLiF7014XC31		8- 5	BE	N	E
〃		9-901	BE	N	E
CSLiP7015XC31		8- 6	BC	N	E
〃		10-901	BC	N	E
CSOU-0012GC34		1-501	AU	N	E
CSW-M7039XS61		8- 13	AN	N	B
【D】					
DHAi-0139GCZZ		4- 10	AF		C
DHAi-7001XCZZ	152P05690	8- 25	AL	N	C
DHAi-7002XCZZ		9- 4	BA	N	C
DHAi-7003XCZZ	160K55780	8- 10	AF	N	C
DHAi-7004XCZZ	152P05691	8- 15	AC	N	C
DHAi-7005XCZZ	160K55790	2- 2	AK	N	C
DHAi-7008XCZZ		7- 31	AH	N	C
DHAi-7009XCZZ		7- 31	AG	N	C
DHAi-7010XCZZ	162K50360	6- 13	AG	N	C
DHAi-7011XCZZ	160K55800	6- 12	AF	N	C
DUNTK0152PS11		5- 22		N	F
DUNTK7470XCZZ	160K55810	8- 11	BB	N	E
DUNTW0154PS20		3- 19	BK	N	E
〃		7-901	BK	N	E
DUNTW0154PS21		3- 19	BK	N	E
〃		7-901	BK	N	E
【G】					
GCAB-7057XCYA		1- 6	AZ	N	C
GCAB-7057XCYZ	802E00990	1- 6	AV	N	C
GCAB-7058XCYA		1- 14	AZ	N	C
GCAB-7058XCYZ	802E01000	1- 14	AV	N	C
GCAB-7059XCYA		1- 4	AX	N	C
GCAB-7059XCYZ	802E01010	1- 4	AT	N	C
GCAB-7061XCZA		2- 5	AY	N	C
GCAB-7061XCZZ		2- 5	AU	N	C
GCAB-7062XCYA		1- 16	AL	N	C
GCAB-7062XCYZ	802E01020	1- 16	AK	N	C
GCAB-7063XCYA		1- 10	AL	N	C
GCAB-7063XCYZ	802E01030	1- 10	AK	N	C
GCOV-7042XCYZ		1- 23	AV	N	C
GCOV-7044XCZZ		1- 23	AV	N	C
GLEGG0003GCZZ		6- 10	AB		C
【H】					
HPNLC7028XCZ1		2- 8	AR	N	C
HPNLC7028XCZ2		2- 8	AR	N	C
HPNLC7028XCZ3		2- 8	AR	N	C
HPNLC7028XCZ4		2- 8		N	C
HPNLC7028XCZZ		2- 8	AR	N	C
【J】					
JBTN-0013QSZZ	003N00673	2- 7	AF	N	C
JBTN-0015QSZZ	003N00669	2- 6	AF	N	C
JBTN-7025XCZZ		2- 9	AG	N	C
JBTN-7026XCZZ		2- 10	AK	N	C
【L】					
LANGT7147XCZ1		6- 17	AL	N	C
LBNDJ0015FCZZ		11- 8	AA		C
LBNDJ0037FCZ1		7- 34	AA		C
〃		8- 41	AA		C
LBOSZ0058GCZ1	022E22660	4- 18	AE		C
LDAi-7016XCZZ		9- 11	AE	N	C
LDAi-7017XCZZ		9- 14	AE	N	C
LDAi-7018XCZZ		9- 6	AL	N	C
LFiX-0003GCZZ		4- 16	AC		C
LFiX-7037XCZZ		9- 10	AD	N	C
LFiX-7038XCZZ		10- 1	AD	N	C
LFRM-7039XCZZ		8- 27	AX	N	C
LFRM-7043XCZZ		5- 39	BB	N	C
LFRM-7044XCZZ		8- 26	AK	N	C
LFRM-7045XCZZ		8- 43	AK	N	C
LHLDZ7048XCZA		2- 3	AP	N	C
LHLDZ7048XCZZ		2- 3	AP	N	C
LPLTM0159GCZZ		3- 10	AD		C
LPLTM0163GCZZ	015E67270	5- 35	AE		C
LPLTM0181GCZZ		4- 31	AC	N	C
LPLTM0273GCZZ		4- 9	AF		C
LPLTM0275GCZ1		5- 7	AK	N	C
LPLTM7066XCZZ	015E72570	5- 49	AG	N	C
LPLTM7070XCZC		6- 9	AQ	N	C
LPLTM7070XCZE		6- 9	AQ	N	C
LPLTP0276GCYZ		1- 1	AK		C
LRALM7012XCZZ		8- 7	AE	N	C
LSOU-0012GCY1		1- 2	AQ		C
LSOU-7004XCYZ	050E15070	1- 8	AM	N	C
LSOU-7005XCYZ	050E15080	1- 9	AN	N	C
LSTPP0022GCZZ		3- 20	AD		C
LX-BZ0030GCZZ		7- 21	AB		C
LX-BZ0187FCZ1	026E46000	4- 13	AA		C
LX-BZ0465FCZZ		10- 5	AA		C
LX-BZ3004SC0B		7- 19	AA		C
LX-BZ7052XCZZ	026E72770	11- 9	AC		C
LX-BZ7057XCZZ	026E72690	5- 46	AC	N	C
LX-BZ7058XCZZ		8- 20	AC	N	C
LX-BZ7059XCZZ		8- 18	AB	N	C
LX-BZ7062XCZZ		8- 16	AA	N	C
LX-BZ7063XCZZ		1- 7			C
LX-NZ7007XCZZ		10- 13	AA	N	C
LX-WZ0017GCZZ		4- 22	AC		C
LX-WZ0018GCZZ		4- 23	AC		C
LX-WZ0019GCZZ		4- 24	AC		C
LX-WZ0044FCZZ		5- 14	AA		C
LX-WZ2011SCZZ		3- 15	AA		C
〃		8 31	AA		C
【M】					
MHNG-7010XCYZ		1- 22	AE	N	C
MLEVF7026XCZZ		5- 48	AF	N	C
MLEVF7027XCZZ		5- 45	AF	N	C
MLEVP0037GCZZ		3- 17	AB		C
MLEVP0038GCZZ		5- 11	AC		C
MLEVP0039GCZZ		5- 37	AC		C
MLEVP0046GCZZ		4- 6	AE		C
MLEVP0088GCZZ	011E07890	4- 4	AC		C
MLEVP0091GCZZ		5- 16	AC		C
MLEVP7028XCZZ	011E09040	3- 22	AG	N	C
MLEVP7029XCZZ	011E09050	7- 16	AE	N	C

PARTS CODE	OEM CODE	NO.	PRICE RANK	NEW MARK	PART RANK
MLEVP7030XCZZ		5- 27	AD	N	C
MLEVP7031XCYZ	011E09060	5- 15	AG	N	C
MLEVP7033XCZZ	011E09070	3- 4	AG	N	C
MLEVP7034XCYZ	120E19140	1- 15	AD	N	C
MSLiF7014XCZZ		9- 8	AH	N	C
MSLiP7015XCZZ		10- 4	AP	N	C
MSPRC0133GCA1		5- 29	AB		C
MSPRC0149GCAZ		4- 15	AA		C
MSPRC0155GCA2		5- 6	AB		C
MSPRC0159GCAZ		4- 2	AB		C
MSPRC0293GCZZ		4- 14	AB		C
MSPRC0305GCZ2		5- 8	AD		C
MSPRC0312GCZZ		5- 38	AB		C
MSPRC0313GCZ1		5- 23	AB		C
MSPRC7150XCZZ		5- 12	AB	N	C
MSPRC7151XCZZ	809E18510	5- 50	AB	N	C
MSPRC7152XCZZ	809E18520	5- 47	AB	N	C
MSPRP0158GCAZ		5- 13	AB		C
MSPRP0304GCZZ		5- 26	AC		C
MSPRP7149XCZZ		9- 13	AC	N	C
MSPRT0137GCAZ	809E14150	4- 20	AC		C
MSPRT0307GCZZ		3- 3	AA		C
MSPRT0308GCZZ		7- 8	AA		C
MSPRT0318GCZZ		7- 32	AA		C
MSPRT7148XCZZ	809E18530	8- 33	AC	N	C
MSPRT7153XCZZ		7- 10	AC		C
〔N〕					
NBLTT7028XCZZ	023E17760	8- 24	AG	N	C
NBRGC0035GCZ1		7- 24	AE		C
NBRGC0074GCZZ		8- 17	AE		C
NBRGP0082GCZZ		7- 27	AB		C
NBRGP0104GCZZ	013E14310	5- 4	AC		C
NBRGP0105GCZZ	013E14320	5- 2	AC		C
NBRGP0106GCZZ	013E14330	5- 43	AF		C
NGERH0071GCZZ		3- 12	AC		C
NGERH0072GCZ1		3- 13	AD		C
NGERH0076GCZZ		3- 1	AC		C
NGERH0077GCZZ	007E55490	3- 14	AC		C
NGERH0078GCZZ	007E55480	3- 16	AC		C
NGERH0080GCZ1	007E55460	4- 12	AE		C
NGERH0083GCZZ		7- 25	AC		C
NGERH0094GCZZ		3- 7	AC		C
NGERH0096GCZZ		3- 5	AC		C
NGERH0169GCZZ	007E55470	5- 5	AC		C
NGERH0171GCZ1		3- 18	AE		C
NGERH0173GCZZ		3- 6	AD		C
NGERH0174GCZZ		7- 6	AD		C
NGERH7059XCZZ	007E59410	8- 32	AH	N	C
NGERH7060XCZZ	007E59420	5- 32	AE	N	C
NGERH7061XCZZ		3- 2	AG	N	C
NPLYZ0007QSZZ		10- 7	AG		C
NPLYZ7035XCZZ		8- 23	AG	N	C
NPLYZ7036XCZZ		8- 19	AM	N	C
NPLYZ7037XCZZ		8- 34	AG	N	C
NRÖLM0108GCZZ		7- 26	AW		C
NRÖLM7045XCZZ	022E23300	5- 33	AG	N	C
NRÖLP0093GCZZ	022E22670	7- 11	AC		C
NRÖLP0106GCZ2		5- 1	AW		C
NRÖLP0109GCZZ	022E22690	5- 44	AY		C
NRÖLP0112GCZZ	022E22650	4- 17	AR		C
NRÖLP0113GCZZ		7- 33	AD		C
NSFTZ7066XCZ1		8- 21		N	C
NSFTZ7067XCZZ		8- 3		N	C
〔P〕					
PBARM0001GCA1		7- 18	AD		C
PBÖX-7004XCZ1		8- 1	AK	N	C
PCÖVP0038GCAZ		5- 28	AA		C
PCÖVP0083GCZZ		4- 32	AK	N	C
PCÖVP0086GCZZ		3- 8	AD		C
PCÖVP7036XCZZ		7- 1	AV	N	C
PGiDM0078GCZZ		5- 36	AM		C
PGiDM7051XCYZ	038E22360	1- 3	AG	N	C
PGLSP7010XCZZ	090E02150	1- 25	AX	N	B
PGUMS7023XCZZ		8- 8	AB	N	C
PHÖG-7015XCZZ		9- 1	AE	N	C
PHÖG-7016XCZZ		9- 15	AE	N	C
PMiR-7035XCZZ	062E09070	9- 12	AL	N	B
PMiR-7036XCZZ	062E09080	10- 3	AN	N	B
PMLT-0118GCZZ		5- 51	AB		C
PMLT-0124GCZZ		4- 29	AB		C
PPiPP0003GCZ1	016E14120	4- 21	AC		C

PARTS CODE	OEM CODE	NO.	PRICE RANK	NEW MARK	PART RANK
PPiPP0006GCZ2	016E14130	4- 19	AC		C
PSHEP0161GCZ1		7- 23	AC		C
PSHEP0320GCZ1		4- 5	AF		C
PSHEP7218XCZ1		1- 17	AG	N	C
PSHEP7220XCZZ		6- 8	AD	N	C
PSHEP7221XCZZ		8- 12	AE	N	C
PSHEP7223XCZZ		9- 3	AA	N	C
PSHEZ0190GCZZ		5- 9	AC		C
PSHEZ7219XCZZ		1- 24	AT	N	C
PSHEZ7227XCZZ		2- 11	AF	N	C
PSHEZ7230XCZZ		3- 21	AD		C
PSLDM7027XCZ1		6- 5	AL	N	C
PSPAZ0005QSZZ		13- 34	AC		C
PSPAZ0049GCZZ		4- 26	AC		C
PSTK-0001QSZZ		1- 21	AN		C
PTME-0022GCZZ		7- 9	AF		C
PTPEZ7052XCZZ		8- 45	AA		C
PWiR-7006XCZZ	117K32320	8- 4	AR	N	C
PWiR-7007XCZZ		8- 46	AQ	N	C
〔Q〕					
QACCD7618QCZZ	117E19330	11- 1	AQ		B
QCNCM7014SC0B		12- 73	AD		C
QCNCM7014SC0C		12- 77	AA		C
〃		12- 82	AA		C
QCNCM7014SC0E		12- 75	AB		C
〃		12- 76	AB		C
QCNCM7014SC0F		12- 74	AB		C
QCNCM7022SC0B		12- 83	AB		C
QCNCW0015QSZZ		12- 81	AE	N	C
QCNCW0053GCZZ		12- 79	AD		C
QCNCW1124LC0D		12- 80	AB		C
QCNCW1124LC1B		12- 72	AC		C
QCNCW1132LC1B		13- 14	AC	N	C
QCNCW1135LC2B		12- 84	AE		C
QCNCW7041XCZZ		14- 19	AG		C
QCNCW7042XC2J		12- 78	AE	N	C
〃		14- 20	AE	N	C
QCNCW7044XCZZ		12- 85	AG	N	C
QCNW-7212XCZZ	117E19340	11- 11	AY		C
QFS-C0047PAZZ		15- 2			A
QFS-C0048PAZZ		15- 1			A
QFS-F0019PAZZ		15- 2	AD		A
QFS-F0030PAZZ		15- 1	AE		A
QFS-T0005GCZZ		7- 22	AQ		A
QSLP-0028GCZZ		5- 25	AE		C
QSLP-0029GCZZ		7- 4	AD		C
QSLP-0030GCZZ		7- 28	AD		C
QSLP-0032GCZZ		5- 20	AD		C
QSÖCZ0002GCZZ		12- 99	AD		C
QSW-P0005QSZZ		13- 13	AC		B
〃		13- 15	AC		B
〃		13- 19	AC		B
〃		13- 22	AC		B
〃		13- 24	AC		B
〃		13- 28	AC		B
〃		13- 29	AC		B
〃		13- 36	AC		B
〃		13- 39	AC		B
〃		13- 42	AC		B
〃		13- 59	AC		B
〔R〕					
RCiLZ0004QSZZ		12- 94	AE		C
RCiLZ0006GCZZ		14- 27	AC		C
RCiLZ1032CCZZ		12-117	AD		C
RCÖRF1043LCZZ		8- 44	AM		C
RCÖRF7013XCZZ		4- 28	AH		C
RCRSZ0028GCZZ		14- 65	AH		B
RCRSZ7009XCZZ		12-210	AP	N	B
RCRSZ7010XCZZ		12-209	AG	N	B
RDTCT0014GCZZ		7- 12	AP		B
RFiLN0019GCZZ		14- 23	AC	N	C
〃		14- 24	AC	N	C
〃		14- 25	AC	N	C
〃		14- 26	AC	N	C
〃		14- 28	AC	N	C
〃		14- 29	AC	N	C
〃		14- 30	AC	N	C
RLMPU0021GCZZ		7- 29	AX		B
RLMPU0022GCZZ		7- 29	AW		B
RLMPZ7015XCZZ		9- 2	AU	N	B
RMÖTN0039GCZZ	127E11880	4- 11	AZ		B

PARTS CODE	OEM CODE	NO.	PRICE RANK	NEW MARK	PART RANK
RMOTP0011QSZZ	127N00970	8- 28	BA		B
RMOTZ7026XCZZ		6- 3	AY	N	B
RMPTW4103QCJJ		12-191	AB		B
〃		12-193	AB		B
〃		12-195	AB		B
〃		12-197	AB		B
〃		12-199	AB		B
〃		12-201	AB		B
〃		12-203	AB		B
〃		12-205	AB		B
〃		12-207	AB		B
RMPTW4220QCJJ		12-208	AB		B
RMPTW4470QCJJ		12-190	AB		B
〃		12-192	AB		B
〃		12-194	AB		B
〃		12-196	AB		B
〃		12-198	AB		B
〃		12-200	AB		B
〃		12-202	AB		B
〃		12-204	AB		B
〃		12-206	AB		B
RPLU-0004GCZZ		4- 1	AN		B
【S】					
SPAKA7705XCZZ		11- 4	AM	N	D
SPAKA7706XCZZ		11- 6	AM	N	D
SPAKA7709XCZZ		11- 3	AF	N	D
SPAKA7714XCZZ	695S01415	11-101	AC	N	D
SPAKC7710XC11		11- 7	AS	N	D
SPAKC7710XC12		11- 7	AS	N	D
SPAKC7710XC13		11- 7	AS	N	D
SPAKC7710XC16		11- 7	AS	N	D
SPAKC7710XC20		11- 7	AS	N	D
SPAKC7710XCZZ		11- 7	AS	N	D
SPAKC7710XS14		11- 7	AS	N	D
SPAKC7710XS15		11- 7	AS	N	D
SPAKC7710XS17		11- 7	AS	N	D
SPAKC7710XS18		11- 7	AS	N	D
SPAKC7710XS19		11- 7	AS	N	D
SPAKC7710XS21		11- 7	AS	N	D
SPAKC7710XS22		11- 7	AS	N	D
SPAKC7710XS23		11- 7	AS	N	D
SSAKA5003CCZZ		11- 2	AA		D
【T】					
TCAUH1008FCZZ	891E00470	1- 18	AE		C
TINSE7277XCZZ		11-102		N	D
TINSE7278XCZZ		11-102		N	D
TLABH0264GCZZ		1- 19	AC		C
TLABH0366GCZZ		7- 2	AC		C
TLABH7404XCZZ		1- 27	AH	N	C
TLABH7407XCZZ	891E75440	1- 26	AH		C
TLABZ0058QSZZ		1- 20	AD		C
TLABZ0205GCZZ		3- 23	AC		C
TLABZ4047FCZZ	891E27220	1- 28	AC		C
TTAG-7006XCZZ		11- 10	AH	N	D
【U】					
UBAGF0039FCZZ		11- 5	AG		D
【V】					
VCCCCY1HH100D		12- 25	AA		C
VCCCCY1HH101J		12- 19	AA		C
〃		12- 24	AA		C
〃		12- 28	AA		C
〃		12- 31	AA		C
〃		12- 34	AA		C
〃		12- 39	AA		C
〃		12- 41	AA		C
〃		12- 71	AA		C
VCCCCY1HH120J		12- 44	AA		C
VCCCCY1HH330J		12- 20	AA		C
〃		12- 70	AA		C
VCCCTV1HH101J		14- 7	AA		C
〃		14- 9	AA		C
〃		14- 11	AA		C
〃		14- 13	AA		C
VCCCTV1HH182J		14- 4	AC	N	C
VCCCTV1HH201J		13- 10	AA	N	C
VCCCTV1HH391J		14- 8	AA		C
〃		14- 10	AA		C
〃		14- 12	AA		C
VCCCTV1HH470J		14- 5	AA		C
〃		14- 15	AA		C
VCCCTV1HH681J		14- 14	AA		C

PARTS CODE	OEM CODE	NO.	PRICE RANK	NEW MARK	PART RANK
VCEAEA1AW476M		14- 2	AB		C
VCEAEU1CW226M		12- 1	AA		C
〃		12- 3	AA		C
VCEAGA1VW106M		12- 2	AA		C
〃		12- 5	AA		C
〃		12- 7	AA		C
VCEAGU1EW476M		12- 6	AB		C
VCEAGU1HW476M		12- 4	AB		C
VCEAJU1CW476M		13- 8	AB		C
VCKYCY1EF104Z		12- 9	AA		C
〃		12- 11	AA		C
〃		12- 14	AA		C
〃		12- 16	AA		C
〃		12- 18	AA		C
〃		12- 22	AA		C
〃		12- 30	AA		C
〃		12- 32	AA		C
〃		12- 35	AA		C
〃		12- 37	AA		C
〃		12- 38	AA		C
〃		12- 40	AA		C
〃		12- 42	AA		C
〃		12- 45	AA		C
〃		12- 47	AA		C
〃		12- 48	AA		C
〃		12- 52	AA		C
〃		12- 54	AA		C
〃		12- 58	AA		C
〃		12- 60	AA		C
〃		12- 65	AA		C
〃		12- 68	AA		C
VCKYCY1HB102K		12- 8	AA		C
〃		12- 10	AA		C
〃		12- 13	AA		C
〃		12- 15	AA		C
〃		12- 21	AA		C
〃		12- 26	AA		C
〃		12- 33	AA		C
〃		12- 57	AA		C
〃		12- 59	AA		C
〃		12- 62	AA		C
〃		12- 64	AA		C
〃		12- 67	AA		C
VCKYCY1HB222K		12- 50	AA		C
〃		12- 55	AA		C
〃		12- 63	AA		C
〃		12- 69	AA		C
VCKYCY1HB471K		12- 49	AB		C
〃		12- 56	AB		C
VCKYCY1HB472K		12- 36	AA		C
VCKYTV1EB104K		13- 11	AA		C
VCKYTV1EF104Z		14- 1	AA		C
〃		14- 3	AA		C
〃		14- 6	AA		C
〃		14- 17	AA		C
〃		14- 18	AA		C
VCKYTV1HB102K		13- 12	AA		C
VCKYTV1HB103K		14- 16	AB		C
VCKYTV1HB223K		12- 12	AA		C
〃		12- 23	AA		C
〃		12- 29	AA		C
〃		12- 46	AA		C
〃		13- 7	AA		C
〃		13- 9	AA		C
VCKYTV1HF104Z		12- 17	AA		C
〃		12- 27	AA		C
〃		12- 43	AA		C
〃		12- 51	AA		C
〃		12- 53	AA		C
〃		12- 61	AA		C
〃		12- 66	AA		C
VHD1SS355//-1		12- 86	AB		B
〃		12- 93	AB		B
VHDDA204K//-1		12- 88	AC		B
〃		12- 90	AC		B
〃		12- 92	AC		B
VHDDAN202K/-1		12- 91	AB		B
VHDDAN217//-1		12- 89	AC		B
VHDDSS133//-1		13- 16	AA		B
VHDIN4005E/-2		12- 87	AB	N	B
VHERLZ2.0A/-1		12-211	AB		B

PARTS CODE	OEM CODE	NO.	PRICE RANK	NEW MARK	PART RANK
VHi27C1024-80		12-100	AW		B
VHi341256SJ12		12- 96	AN	N	B
〃		12-102	AN	N	B
VHi4M8SOJ-70/		14- 21	BB		B
VHi74HC4066AF		12-114	AD		B
VHiH8S/2350FP		12- 98	AY		B
VHiHG73C025FD		12-101	BE		B
VHiLC7935//-1		13- 25	AN		B
VHiLH50506N-2		12-115	AU		B
VHiLM358PS/-S		12-110	AC		B
VHiLM7121////		12-113	AQ	N	B
VHiM24C02WBN6		12- 95	AG		B
VHiM51953BL-1		12- 97	AF		B
VHiM66236FP-1		12-108	AT		B
VHiMC74HC00AF		13- 27	AC		B
VHiNJM2903M/-		12-109	AD		B
VHiNJM3414M-1		12-111	AF		B
VHiSLA303T/-1		14- 22	AY		B
VHiSLA7027MU/		12-103	AQ		B
VHiSN74LS07NS		12-112	AF		B
VHiTC74HC04FN		12-105	AD		B
VHiTC74HC08F1		12-106	AE		B
VHiTC74HC151F		13- 26	AG	N	B
VHiTC74HC244F		12-104	AM		B
VHiTC74HC32AF		12-107	AC		B
VHPBS520///-1		9- 7	AL		B
VHPGP1A71A1-1	107E07470	8- 38	AG		B
VHPLTC3650G01		13- 35	AQ		B
VHPMPG3864K-J		13- 1	AC		B
〃		13- 2	AC		B
〃		13- 3	AC		B
〃		13- 4	AC		B
〃		13- 5	AC		B
〃		13- 6	AC		B
〃		13- 17	AC		B
〃		13- 20	AC		B
〃		13- 21	AC		B
〃		13- 23	AC		B
〃		13- 37	AC		B
〃		13- 38	AC		B
〃		13- 40	AC		B
〃		13- 41	AC		B
〃		13- 55	AC		B
〃		13- 57	AC		B
〃		13- 58	AC		B
VHPMVR3864K-J		13- 18	AC		B
〃		13- 33	AC		B
〃		13- 56	AC		B
VHViCPN38//-1	108N00367	12-116	AF	N	B
VRS-CY1JD000J		12-164	AA		C
〃		12-172	AA		C
〃		12-176	AA		C
〃		12-181	AA		C
〃		12-183	AA		C
〃		12-189	AA		C
VRS-CY1JD100J		12-132	AA		C
〃		12-187	AA		C
VRS-CY1JD101J		12-128	AA		C
〃		12-140	AA		C
〃		12-159	AA		C
〃		12-168	AA		C
〃		12-171	AA		C
〃		12-178	AA		C
VRS-CY1JD102J		12-125	AA		C
〃		12-127	AA		C
〃		12-133	AA		C
〃		12-136	AA		C
〃		12-144	AA		C
〃		12-158	AA		C
〃		12-174	AA		C
〃		12-179	AA		C
〃		12-184	AA		C
VRS-CY1JD103J		12-122	AA		C
〃		12-124	AA		C
〃		12-126	AA		C
〃		12-129	AA		C
〃		12-139	AA		C
〃		12-142	AA		C
〃		12-146	AA		C
〃		12-153	AA		C
〃		12-160	AA		C

PARTS CODE	OEM CODE	NO.	PRICE RANK	NEW MARK	PART RANK
VRS-CY1JD103J		12-166	AA		C
〃		12-170	AA		C
〃		12-185	AA		C
VRS-CY1JD122J		12-155	AA		C
VRS-CY1JD162J		12-152	AA		C
VRS-CY1JD203J		12-123	AA		C
〃		12-137	AA		C
〃		12-141	AA		C
〃		12-175	AA		C
〃		12-182	AA		C
VRS-CY1JD205J		12-151	AA		C
〃		12-154	AA		C
VRS-CY1JD220J		12-150	AA		C
VRS-CY1JD242J		12-162	AA	N	C
〃		12-167	AA	N	C
VRS-CY1JD271J		12-165	AA		C
VRS-CY1JD331J		12-143	AA		C
VRS-CY1JD332J		12-145	AA		C
〃		12-147	AA		C
VRS-CY1JD333J		12-135	AA		C
VRS-CY1JD470J		12-149	AA		C
VRS-CY1JD473J		12-121	AA		C
〃		12-161	AA		C
〃		12-173	AA		C
VRS-CY1JD621J		12-163	AA		C
VRS-CY1JD680J		12-146	AA		C
VRS-CY1JD681J		12-180	AA		C
〃		12-188	AA		C
VRS-CY1JD751J		12-169	AA		C
VRS-CY1JD752J		12-156	AA		C
VRS-CY1JD911J		12-138	AA		C
VRS-CY1JD912J		12-134	AA		C
VRS-RE3DA1R0J		12-119	AB		C
VRS-TP2BD000J		13- 30	AA		C
〃		13- 31	AA		C
〃		13- 32	AA		C
VRS-TP2BD101J		12-177	AA		C
VRS-TP2BD181J		12-131	AA		C
VRS-TP2BD432J		12-130	AA	N	C
VRS-TP2BD472J		12-120	AA		C
VRS-TS2AD101J		13- 53	AA		C
VRS-TS2AD102J		13- 48	AA		C
〃		13- 52	AA		C
VRS-TS2AD103J		13- 54	AA		C
〃		14- 31	AA		C
〃		14- 33	AA		C
VRS-TS2AD105J		14- 55	AA		C
VRS-TS2AD121J		13- 44	AA		C
VRS-TS2AD122J		14- 35	AA		C
〃		14- 37	AA		C
〃		14- 39	AA		C
〃		14- 41	AA		C
〃		14- 43	AA		C
〃		14- 45	AA		C
〃		14- 47	AA		C
〃		14- 49	AA		C
〃		14- 51	AA		C
〃		14- 53	AA		C
〃		14- 56	AA		C
〃		14- 57	AA		C
〃		14- 59	AA		C
〃		14- 61	AA		C
〃		14- 63	AA		C
VRS-TS2AD151J		13- 50	AA		C
VRS-TS2AD152J		13- 49	AA		C
VRS-TS2AD221J		14- 32	AA		C
〃		14- 38	AA		C
〃		14- 40	AA		C
〃		14- 42	AA		C
〃		14- 44	AA		C
〃		14- 46	AA		C
〃		14- 48	AA		C
〃		14- 50	AA		C
〃		14- 52	AA		C
〃		14- 54	AA		C
〃		14- 58	AA		C
〃		14- 60	AA		C
〃		14- 62	AA		C
〃		14- 64	AA		C
VRS-TS2AD222J		14- 34	AA		C
VRS-TS2AD332J		14- 36	AA		C

PARTS CODE	OEM CODE	NO.	PRICE RANK	NEW MARK	PART RANK
VRS-TS2AD472J		13- 45	AA		C
〃		13- 46	AA		C
〃		13- 47	AA		C
VRS-TS2AD511J		13- 51	AA		C
VRSCY1JD1002F		12-186	AA		C
VRSCY1JD1652F		12-157	AA		C
VS2SA1036KQRC		12-118	AB		B
VSDTB113ZK/-1		13- 43	AD		B
〔X〕					
XBPSD20P16XS0		9- 9		N	C
XBPSN30P05K00		7- 30	AA		C
XBPSN30P06KS0		7- 5	AA		C
XBPSN40P06K00		6- 16	AA		C
XBTSD40P06000		8- 39	AA		C
XEBSD30P08000	026E6413/	2- 4	AA		C
〃	026E6413/	3- 9	AA		C
〃	026E6413/	4- 3	AA		C
〃	026E6413/	5- 21	AA		C
〃	026E6413/	6- 6	AA		C
〃	026E6413/	7- 14	AA		C
XEBSD30P10000		1- 13	AA		C
〃		7- 15	AA		C
XEBSD30P18000		5- 40	AA		C
XEBSD30P30000		5- 18	AA		C
XEBSD40P06000	026E64140	10- 10	AA		C
XEBSE30P08000	026E64180	6- 2	AA		C
XEPSD30P06X00	026E64260	7- 7	AA		C
XEPSD30P08X00	026E64270	3- 11	AA		C
XHBSD26P06000		8- 14	AA		C
XHBSD30P04000		8- 9	AA		C
XHBSD30P06000		4- 7	AA		C
〃		6- 11	AA		C
〃		8- 2	AA		C
XHBSD30P28000		6- 4		N	C
XHBSE30P08000		1- 5	AA	N	C
XNGSN30-18000		7- 3	AC		C
XPSSJ20-14000		5- 19	AA		C
XPSSJ30-10000		8- 22	AA		C
XRESP40-06000	028E12150	8- 30	AA		C
XRESP50-06000	354W20952	8- 35	AA		C
XUBSD20P05000		9- 5	AA		C
〃		10- 2	AA		C
XUBSD30P08000		10- 12	AA		C
XWHSD30-05080		5- 17	AA		C
XWHSD40-08100		8- 47	AA		C
XWSSD30-07000		5- 24	AA		C
XWSSD40-08000		10- 6	AA		C
XWVUW30-04000		7- 20	AA		C

PARTS CODE	OEM CODE	NO.	PRICE RANK	NEW MARK	PART RANK

■ Index

OEM CODE	PARTS CODE	NO.	PRICE RANK	NEW MARK	PART RANK
【0】					
003N00669	JBTN-0015QSZZ	2- 6	AF	N	C
003N00673	JBTN-0013QSZZ	2- 7	AF	N	C
007E55460	NGERH0080GCZ1	4- 12	AE		C
007E55470	NGERH0169GCZZ	5- 5	AC		C
007E55480	NGERH0078GCZZ	3- 16	AC		C
007E55490	NGERH0077GCZZ	3- 14	AC		C
007E59410	NGERH7059XCZZ	8- 32	AH	N	C
007E59420	NGERH7060XCZZ	5- 32	AE	N	C
011E07890	MLEVP0088GCZZ	4- 4	AC		C
011E09040	MLEVP7028XCZZ	3- 22	AG	N	C
011E09050	MLEVP7029XCZZ	7- 16	AE	N	C
011E09060	MLEVP7031XCYZ	5- 15	AG	N	C
011E09070	MLEVP7033XCZZ	3- 4	AG	N	C
013E14310	NBRGP0104GCZZ	5- 4	AC		C
013E14320	NBRGP0105GCZZ	5- 2	AC		C
013E14330	NBRGP0106GCZZ	5- 43	AF		C
015E67270	LPLTM0163GCZZ	5- 35	AE		C
015E72570	LPLTM7066XCZZ	5- 49	AG	N	C
016E14120	PPiPP0003GCZ1	4- 21	AC		C
016E14130	PPiPP0006GCZ2	4- 19	AC		C
022E22650	NROLP0112GCZZ	4- 17	AR		C
022E22660	LBOSZ0058GCZ1	4- 18	AE		C
022E22670	NROLP0093GCZZ	7- 11	AC		C
022E22690	NROLP0109GCZZ	5- 44	AY		C
022E23300	NROLM7045XCZZ	5- 33	AG	N	C
023E17760	NBLTT7028XCZZ	8- 24	AG	N	C
026E46000	LX-BZ0187FCZ1	4- 13	AA		C
026E6413/	XEBSD30P08000	2- 4	AA		C
〃	XEBSD30P08000	3- 9	AA		C
〃	XEBSD30P08000	4- 3	AA		C
〃	XEBSD30P08000	5- 21	AA		C
〃	XEBSD30P08000	6- 6	AA		C
〃	XEBSD30P08000	7- 14	AA		C
026E64140	XEBSD40P06000	10- 10	AA		C
026E64180	XEBSE30P08000	6- 2	AA		C
026E64260	XEPSD30P06X00	7- 7	AA		C
026E64270	XEPSD30P08X00	3- 11	AA		C
026E72690	LX-BZ7057XCZZ	5- 46	AC	N	C
026E72770	LX-BZ7052XCZZ	11- 9	AC		C
028E12150	XRESP40-06000	8- 30	AA		C
038E22360	PGiDM7051XCYZ	1- 3	AG	N	C
050E15070	LSOU-7004XCYZ	1- 8	AM	N	C
050E15080	LSOU-7005XCYZ	1- 9	AN	N	C
053E06010	CPNLC7028XC35	1- 11	BK	N	E
〃	CPNLC7028XC35	2-901	BK	N	E
062E09060	CDAiU0008RS52	8- 42	BR	N	E
062E09070	PMiR-7035XCZZ	9- 12	AL	N	B
062E09080	PMiR-7036XCZZ	10- 3	AN	N	B
090E02150	PGLSP7010XCZZ	1- 25	AX	N	B
【1】					
107E07470	VHPGP1A71A1-1	8- 38	AG		B
108N00367	VHViCPN38//-1	12-116	AF	N	B
117E19330	QACCD7618QCZZ	11- 1	AQ		B
117E19340	QCNW-7212XCZZ	11- 11	AY		C
117K32320	PWiR-7006XCZZ	8- 4	AR	N	C
120E19140	MLEVP7034XCYZ	1- 15	AD	N	C
127E11880	RMOTN0039GCZZ	4- 11	AZ		B
127N00970	RMOTP0011QSZZ	8- 28	BA		B
152P05690	DHAi-7001XCZZ	8- 25	AL	N	C
152P05691	DHAi-7004XCZZ	8- 15	AC	N	C
160K55740	CPWBF7022XC33	6- 15	BM	N	E
〃	CPWBF7022XC33	15-901	BM	N	E
160K55750	CPWBF7022XC34	6- 15	BP	N	E
〃	CPWBF7022XC34	15-901	BP	N	E
160K55780	DHAi-7003XCZZ	8- 10	AF	N	C
160K55790	DHAi-7005XCZZ	2- 2	AK	N	C
160K55800	DHAi-7011XCZZ	6- 12	AF	N	C
160K55810	DUNTK7470XCZZ	8- 11	BB	N	E
162K50360	DHAi-7010XCZZ	6- 13	AG	N	C
【3】					
354W20952	XRESP50-06000	8- 35	AA		C
【6】					
695S01415	SPAKA7714XCZZ	11-101	AC	N	D
【8】					
802E00980	CCAB-7060XC01	1- 12	AT	N	C
802E00990	GCAB-7057XCYZ	1- 6	AV	N	C
802E01000	GCAB-7058XCYZ	1- 14	AV	N	C
802E01010	GCAB-7059XCYZ	1- 4	AT	N	C
802E01020	GCAB-7062XCYZ	1- 16	AK	N	C
802E01030	GCAB-7063XCYZ	1- 10	AK	N	C
809E14150	MSPRT0137GCAZ	4- 20	AC		C
809E18510	MSPRC7151XCZZ	5- 50	AB	N	C
809E18520	MSPRC7152XCZZ	5- 47	AB	N	C
809E18530	MSPRT7148XCZZ	8- 33	AC	N	C
891E00470	TCAUH1008FCZZ	1- 18	AE		C
891E27220	TLABZ4047FCZZ	1- 28	AC		C
891E75440	TLABH7407XCZZ	1- 26	AH		C